ALOFT Hotels G4.0
Decor: Eclectic

Issue Date: 28-Jul-17
Revision Date 14-Feb-19

# Building Product Manual
# New Build

## VOLUME 2 - PUBLIC SPACE

**Revision Log**

| Revision # | Date | Description |
|---|---|---|
| | 07/28/17 | Initial Release |
| 1 | 01/29/18 | Trimester Updates |
| 2 | 5/25/2018 | Trimester Updates |
| 3 | 9/21/2018 | Trimester Updates |
| 4 | 2/14/2019 | Public Space Revisions + Trimester Updates |
| | | |
| | | |
| | | |
| | | |
| | | |
| | | |
| | | |
| | | |
| | | |
| | | |
| | | |
| | | |
| | | |
| | | |

## PREAMBLE

### Instruction For Use of Documentation

The total required information provided to design and build an Aloft Hotel by Marriott is contained in the criteria documents identified below which relay standardized public space, guestrooms, guestroom corridors, back of house and building site + exterior. Eclectic is the decor package for the Public Space and Guestrooms.

### Comprehensive Criteria Documents for The Aloft Hotel by Marriott are:

1. Design Standards
2. Design Guideline Drawings
3. Specifications as indicated below:
   - **A. Building Product Manual (BPM)**
     - Volume 1 - Building Site + Exterior
     - **Volume 2 - Public Space**
     - Volume 3 - Guestrooms
     - Volume 4 - Food Service & Guest
   - B. Interior Signage Specifications
   - C. Exterior Signage Specifications
   - E. Interior Decor Specifications Manual

1. Design Standards provide a written macro view of the overall design elements required for Aloft Hotel by Marriott.
2. The Design Guideline Drawings - provide more specific design direction via drawings to supplement the Design
3. The Interior Décor Spec Manual lists items required that are generally referred to as Furniture, Fixture, & Equipment or FF&E items. These items and the accepted suppliers listed, have been contracted by Marriott and can be supplied through Marriott's procurement division.
4. The Building Product Manual (BPM) lists all the finishes required for the building and the building products that are typically installed and supplied by the General Contractor. This document must be used in conjunction with the drawings for the contractor supplied items as specific dimensions and criteria are referenced in both documents. Because of the high quality of design expected for Aloft by Marriott, Marriott has specified acceptable suppliers who have worked closely with Marriott on the initial Aloft Design.

All of these documents are integral elements of the complete design and construction information. The project architect is responsible for incorporating all components of the criteria documents in the development of any Aloft Hotels by Marriott Project.

### Use of Drawings

When finishes and Products that vary between the Décor packages will appear in the Design Guideline Drawings with base number only. These finishes and products when listed in the Interior Decor Specification Manual (finishes and FF&E items that can be purchased through Marriott Procurement) will appear with the base number plus a suffix specific to the particular décor package. Those finishes and products listed in the Building Product Manual that vary between Décor packages will appear with the base number plus a prefix indicating the specific Décor Package .

### General Compliance Requirements

The Owner's / Franchisee's Consulting Design Professional shall be responsible for verifying and complying with all applicable laws, covenants, codes, ordinances, rules, regulations, restrictions, etc. The Design Professional shall pay close attention to the requirements of the federal accessibility law, Americans with Disability Act (ADA), local and state accessibility regulations, and the applicable fire, life safety requirements. It is also the responsibility of each hotel owner to ensure that all products have been adjusted in dimension, quantity and hand suit the specific site conditions.

## ABBREVIATIONS

### General Schedule Abbreviations:

| | |
|---|---|
| ADA | Americans with Disabilities Act |
| AFF | Above Finish Floor |
| ASTM | American Society of Testing Materials |
| AWI | American Woodworking Institute |
| CEF | Corridors, Elevators, and Foyers |
| CF/CI | Contractor Furnished/ Contractor Installed |
| COM | Customer's Own Material |
| GC | General Contractor |
| GR | Guest Room |
| GRB | Guest Room Bath |
| LY | Lineal Yard |
| MF/MI | Manufacturer Furnished/ Manufacturer Installed |
| N/A | Not Applicable |
| NFPA | National Fire Protection Association |
| NY | Narrow Yards |
| OF/CI | Owner Furnished/ Contractor Installed |
| OF/MI | Owner Furnished/ Manufacturer Installed |
| OF/CI | Owner Furnished/ Owner Installed |
| RFP | Request for Proposal |
| SF | Square Feet |
| SY | Square Yard |
| UL | Underwriters Laboratory |

# Marriott: Building Product Manual (BPM) Number Nomenclature

*(items are numbered with the item prefix and then consecutive numbers starting with 001 - "Mark Number" unless indicated otherwise)*

*Public Space*

| | |
|---|---|
| Architectural Lighting | AL-XXX |
| Box Lighting | ALB-XX |
| Strip lighting | ALJ-XX |
| Decorative Lighting | ALK-XX |
| Recessed can or downlight | ALR-XX |
| Exit Lighting | ALX-XX |
| Building Products | |
| Elevator | ELE-XXX |
| Linen Chute | LC-XXX |
| Doors | |
| Door Frames | DF-XXX |
| Door | DR-XXX |
| Door Hardware | HW-XXX |
| Electrical | |
| Receptacles + Switches | EL-XXX |
| Equipment | |
| Residential Appliances | RA-XXX |
| Interior Finishes | |
| Concrete | CO-XXX |
| Interior EFIS Wall Finish | EF-XXX |
| Entrance Mat | EM-XXX |
| Fabric Panel | FP-XXX |
| Floor Coating | FC-XXX |
| Glass Film | GF-XXX |
| Glass | GL-XXX |
| Metal Base | MB-XXX |
| Paint | PT-XXX |
| Resilient Base | RB-XXX |
| Resilient Flooring | RF-XXX |
| Thresholds | TH-XXX |
| Tile Base | TB-XXX |
| Tile Ceiling | TC-XXX |
| Tile Floor | TF-XXX |
| Tile Wall | TW-XXX |
| Transition Strips | TS-XXX |
| Wood | WD-XXX |
| Wood Base | WB-XXX |
| Wood Finish | WF-XXX |
| Wood Panel | WP-XXX |
| Millwork | |
| Countertops | CT-XXX |
| Plastic Laminate | LA-XXX |
| Millwork Hardware | MH-XXX |

Plumbing PL-XXX

- 100 – Sinks/ Mop Sink
- 200 – Faucets
- 300 – Toilets/ Urinal/ Water Cooler
- 400 – Shower Heads
- 500 – Shower Diverters
- 600 – Shower pans/ base/ tub
- 700 – Shower doors
- 800 - Fittings
- 900 - Misc. (floor drains, clean outs)

Operable Partition OP-XXX

Time Capsule TI-XXX

Toilet Partitions TP-XXX

Toilet Accessories TA-XXX

- 100 – Grab bars
- 200 – Toilet tissue/ facial tissue
- 300 – Glass Shelf/ Iron Board Caddy
- 400 – Towel bar/ Towel Ring/ Robe Hook
- 500 – Soap Dish/ Shampoo Dispenser/ Shower Accessory Ledge/ Shower Foot Rest
- 600 – Shower Curtain Rod/ Glass Shower (components)
- 700 – Shower Seat/ Tub Seat
- 800 – Public Restroom (Feminine Napkin Dispenser, Paper Towel Dispenser/ Receptacle, Soap Dispenser, Seat Cover, mirror, grab bars)
- 900 - MIsc

aloft HOTELS

**Building Product Manual Specification Index**

| | |
|---|---|
| Project: | Public Spaces |
| Project #: | ALOFT Hotels G4.0 |
| Issue Date: | July 28, 2017 |
| Rev. Date: | February 14, 2019 |

| Control # | Item Name | Issue Date | Revision Date |
|---|---|---|---|
| **ARCHITECTURAL LIGHTING** | | | |
| **Architectural Lighting - Box Light (ALB)** | | | |
| ALB-01 | Recessed Fixture | 7/28/2017 | 1/29/2018 |
| ALB-02 | Recessed Fixture | 7/28/2017 | 1/29/2018 |
| | | | |
| **Architectural Lighting - Controls (ALC)** | | | |
| C-01 | Lighting Controls - Lobby | 1/29/2018 | |
| C-02 | Lighting Controls - Fitness | 1/29/2018 | |
| C-03 | Lighting Controls - Meeting | 1/29/2018 | |
| | | | |
| **Architectural Lighting - Strip Lighting (ALJ)** | | | |
| ALJ-01 | Strip Fixture | 7/28/2017 | 1/29/2018 |
| ALJ-02 | Strip Fixture | 7/28/2017 | 1/29/2018 |
| ALJ-03 | Strip Fixture | 7/28/2017 | 1/29/2018 |
| ALJ-04-a | Strip Fixture | 2/14/2019 | |
| ALJ-04-b | Strip Fixture | 2/14/2019 | |
| ALJ-04-c | Strip Fixture | 2/14/2019 | |
| ALJ-07 | Strip Fixture | 7/28/2017 | 1/29/2018 |
| ALJ-08 | Strip Fixture | 7/28/2017 | 1/29/2018 |
| ALJ-13 | Strip Fixture | 7/28/2017 | 1/29/2018 |
| ALJ-14 | Cove Light | 2/14/2019 | |
| | | | |
| **Architectural Lighting - Decorative Architectural Light (ALK)** | | | |
| ALK-01 | Linear Fixture - NOT USED | 7/28/2017 | 2/14/2019 |
| ALK-04 | Wall Fixture | 7/28/2017 | 2/14/2019 |
| ALK-05-A | Track System | 7/28/2017 | 1/29/2018 |
| ALK-05-B | Track System | 7/28/2017 | 1/29/2018 |
| ALK-05-C | Track System | 7/28/2017 | 1/29/2018 |
| ALK-06 | Track Head | 7/28/2017 | 1/29/2018 |
| ALK-07 | Track Head w/Monopoint | 1/29/2018 | 2/14/2019 |
| ALK-09 | Track Head | 2/14/2019 | |
| | | | |
| **Architectural Lighting - Recessed Can (ALR)** | | | |
| ALR-01 | Recessed Fixture | 7/28/2017 | 1/29/2018 |
| ALR-03 | Recessed Fixture | 7/28/2017 | 1/29/2018 |
| ALR-04 | Recessed Fixture | 7/28/2017 | 1/29/2018 |
| ALR-05 | Recessed Fixture | 7/28/2017 | 1/29/2018 |
| ALR-06 | Recessed Fixture | 7/28/2017 | 1/29/2018 |
| ALR-08 | Recessed Fixture | 7/28/2017 | 1/29/2018 |
| ALR-09 | Recessed Fixture - NOT USED | 7/28/2017 | |
| ALR-10 | Recessed Fixture | 7/28/2017 | 1/29/2018 |
| | | | |
| **Architectural Lighting - Exit Lighting (ALX)** | | | |
| ALX-01 | Exit Fixture | 7/28/2017 | 1/29/2018 |
| CUTSHEETS | | | |
| | | | |
| **CONVEYING EQUIPMENT** | | | |
| **ELEVATOR (ELE)** | | | |
| ELE-001.1 | Hydrolic or Machine Roomless Elevator - Passenger | 7/28/2017 | 2/14/2019 |
| ELE-001.2 | Custom Elevator Fit Out - Passenger | 2/14/2019 | |
| ELE-002.1 | Hydrolic or Machine Roomless Elevator - Service Cab | 1/29/2018 | 2/14/2019 |
| ELE-002.2 | Custom Elevator Fit Out - Service | 2/14/2019 | |
| | | | |
| **LINEN CHUTE (LC)** | | | |

| Control # | Item Name | Issue Date | Revision Date |
|---|---|---|---|
| LC-001 | Linen Chute | 7/28/2017 | |
| | | | |
| **INTERIOR INSULATION FINISHING SYSTEM (EF)** | | | |
| EF-001 | Interior EFIS Wall Finish | 7/28/2017 | 1/29/2018 |
| CUTSHEETS | | | |
| ***DOORS*** | | | |
| **DOOR FRAMES (DF)** | | | |
| DF-001 | Door Frame | 7/28/2017 | 1/29/2018 |
| | | | |
| **DOORS (DR)** | | | |
| DR-004 | Door | 7/28/2017 | 2/14/2019 |
| DR-005 | Door | 7/28/2017 | 2/14/2019 |
| DR-006 | Door | 7/28/2017 | 2/14/2019 |
| DR-007 | Door | 7/28/2017 | 2/14/2019 |
| DR-008 | Door | 7/28/2017 | |
| DR-009 | Door | 7/28/2017 | 2/14/2019 |
| DR-010 | Door | 7/28/2017 | 2/14/2019 |
| DR-011 | Door | 2/14/2019 | |
| DR-014 | Door | 7/28/2017 | 2/14/2019 |
| DR-015 | Door | 7/28/2017 | 2/14/2019 |
| DR-016 | Door | 7/28/2017 | 2/14/2019 |
| DR-017 | Door | 7/28/2017 | 1/29/2018 |
| DR-018-CO | Door, Continental Group | 2/14/2019 | |
| DR-018-VT | Door, VT Industries | 2/14/2019 | |
| DR-019-CO | Triple White Board Barn Doors, Continental Group | 2/14/2019 | |
| DR-019-VT | Triple White Board Barn Doors, VT Industries | 2/14/2019 | |
| | | | |
| **DOOR HARDWARE (DW)** | | | |
| DOOR HARDWARE SCHEDULE | | 7/28/2017 | 2/14/2019 |
| HW-002 | Hinge | 7/28/2017 | 1/29/2018 |
| HW-003 | Electronic Lock | 7/28/2017 | 1/29/2018 |
| HW-004 | Door Stop | 7/28/2017 | 1/29/2018 |
| HW-016 | Surface Closer | 7/28/2017 | 1/29/2018 |
| HW-017 | Kick Plate | 7/28/2017 | 1/29/2018 |
| HW-018 | Lockset | 7/28/2017 | 1/29/2018 |
| HW-019 | Pivots | 7/28/2017 | 1/29/2018 |
| HW-020 | Pivots | 7/28/2017 | 1/29/2018 |
| HW-021 | Closer | 7/28/2017 | 1/29/2018 |
| HW-022 | Holder | 7/28/2017 | 1/29/2018 |
| HW-023 | Deadbolt | 7/28/2017 | 1/29/2018 |
| HW-024 | Cylinder | 7/28/2017 | 1/29/2018 |
| HW-025 | Flush Bolt | 7/28/2017 | 1/29/2018 |
| HW-026 | Dust Proof Strike | 7/28/2017 | 1/29/2018 |
| HW-027 | Pull | 7/28/2017 | 1/29/2018 |
| HW-028 | Threshold | 7/28/2017 | 1/29/2018 |
| HW-029 | Sweep | 7/28/2017 | 1/29/2018 |
| HW-030 | Continuous Hinge | 7/28/2017 | 1/29/2018 |
| HW-031 | Exit Device | 7/28/2017 | 1/29/2018 |
| HW-032 | Cylinder | 7/28/2017 | 1/29/2018 |
| HW-033 | Electric Strike | 7/28/2017 | 1/29/2018 |
| HW-034 | Surface Closer | 7/28/2017 | 1/29/2018 |
| HW-035 | Gasketing | 7/28/2017 | 1/29/2018 |
| HW-036 | Exit Device | 7/28/2017 | 1/29/2018 |
| HW-037 | Exit Device | 7/28/2017 | 1/29/2018 |
| HW-038 | Silencer | 7/28/2017 | 1/29/2018 |
| HW-039 | Electronic Lock | 1/29/2018 | |
| HW-041 | Hinge | 7/28/2017 | 1/29/2018 |
| HW-042 | Latchset | 1/29/2018 | |
| HW-043 | Flushbolt | 1/29/2018 | |
| HW-044 | Lockset | 1/29/2018 | |
| HW-045 | Gasketing | 1/29/2018 | |

| Control # | Item Name | Issue Date | Revision Date |
|---|---|---|---|
| HW-046 | Astragal | 1/29/2018 | |
| HW-047 | Surface Closer | 1/29/2018 | |
| HW-048 | Lockset | 1/29/2018 | |
| HW-049 | Exit Device | 1/29/2018 | |
| HW-050 | Electromagnetic Holder | 1/29/2018 | |
| HW-051 | Meeting Stiles | 1/29/2018 | |
| HW-052 | Electronic Lock with Exit Device | 5/25/2018 | |
| HW-053 | Exit Device | 5/25/2018 | |
| HW-054 | Electromagnetic Holder | 2/14/2019 | |
| CUTSHEETS | | | |
| | | | |
| **ELECTRICAL** | | | |
| **Electrical (EL)** | | | |
| EL-001 | Wall Outlet | 7/28/2017 | 1/29/2018 |
| EL-002 | Power + Data Outlet and Light Switch Faceplates | 7/28/2017 | 1/29/2018 |
| EL-003 | Floor Box | 7/28/2017 | 1/29/2018 |
| EL-004 | Recessed Power Grommet | 2/14/2019 | |
| EL-005 | Faceplate Cover Floor Outlet | 2/14/2019 | |
| EL-006 | Floor Box | 2/14/2019 | |
| EL-007 | Wall Outlet | 2/14/2019 | |
| | | | |
| **EQUIPMENT** | | | |
| **Residential Appliances (RA)** | | | |
| RA-001 | Full Size Refrigerator | 2/14/2019 | |
| RA-002 | Microwave | 2/14/2019 | |
| | | | |
| **INTERIOR FINISHES** | | | |
| **CONCRETE (CO)** | | | |
| CO-001 | Polished Concrete | 7/28/2017 | 1/29/2018 |
| CO-003 | Concrete at Interior/Exterior Pool Deck | 7/28/2017 | 2/14/2019 |
| CO-004 | Sealed Concrete | 7/28/2017 | |
| CO-005 | Concrete Floor | 2/14/2019 | |
| CO-006 | Concrete Floor | 2/14/2019 | |
| CUTSHEETS | | | |
| | | | |
| **ENTRY MAT (EM)** | | | |
| EM-001 | Entry Vestibule Mat | 7/28/2017 | 2/14/2019 |
| | | | |
| **FABRIC PANEL (FP)** | | | |
| FP-001 | Felt Panel | 7/28/2017 | 2/14/2019 |
| | | | |
| **GLASS FILM (GF)** | | | |
| GF-001 | Graphic Adhesive Film | 7/28/2017 | 1/29/2018 |
| GF-002 | Graphic Adhesive Film | 7/28/2017 | 1/29/2018 |
| | | | |
| **GLASS (GL)** | | | |
| GL-001 | Mirrored Glass | 9/21/2018 | 2/14/2019 |
| GL-002 | Glass | 2/14/2019 | |
| GL-003-ALT1 | Mirrored Glass | 2/14/2019 | |
| GL-003-ALT2 | Mirrored Glass | 2/14/2019 | |
| | | | |
| **GROUT (GR)** | | | |
| GR-003 | Grout | 5/25/2018 | |
| GR-004 | Grout | 5/25/2018 | |
| GR-005 | Grout | 5/25/2018 | |
| GR-006 | Grout | 5/25/2018 | |
| GR-007 | Grout | 5/25/2018 | 2/14/2019 |
| GR-008 | Grout | 2/14/2019 | |
| GR-009 | Grout | 2/14/2019 | |
| GR-010 | Grout | 2/14/2019 | |
| GR-011 | Grout | 2/14/2019 | |

| Control # | Item Name | Issue Date | Revision Date |
|---|---|---|---|
| GR-012 | Grout | 2/14/2019 | |
| | | | |
| **METAL BASE (MB)** | | | |
| MB-001 | Metal Sheeting | 7/28/2017 | 2/14/2019 |
| MB-002 | Metal Sheeting | 7/28/2017 | 1/29/2018 |
| | | | |
| **METAL CEILING PANEL (MCP)** | | | |
| MCP-001 | Metal Ceiling Panel with Perforated Panels | 2/14/2019 | |
| MCP-002 | Metal Trim | 2/14/2019 | |
| CUTSHEETS | | | |
| | | | |
| **MIRROR (MR)** | | | |
| MR-001 | Mirror - NOT USED | 7/28/2017 | 2/14/2019 |
| | | | |
| **PAINT (PT)** | | | |
| PT-009 | Wall Paint | 7/28/2017 | 2/14/2019 |
| PT-010 | Column Paint (Base Coat) | 7/28/2017 | 2/14/2019 |
| PT-011 | Column Paint (Top Coat) | 7/28/2017 | 1/29/2018 |
| PT-012 | Ceiling Paint | 5/25/2018 | 2/14/2019 |
| PT-013 | Wall Paint | 7/28/2017 | 2/14/2019 |
| PT-014 | Wall Paint (Accent/Vanity Wall) | 7/28/2017 | 2/14/2019 |
| PT-015 | Wall Paint - NOT USED | 7/28/2017 | |
| PT-016 | Wall Paint (Accent/Vanity Wall) | 7/28/2017 | 1/29/2018 |
| PT-017 | Wall Paint - NOT USED | 7/28/2017 | |
| PT-018 | Door Paint | 7/28/2017 | 1/29/2018 |
| PT-019 | Ceiling Paint | 7/28/2017 | 2/14/2019 |
| PT-020 | Wall Paint - NOT USED | 7/28/2017 | |
| PT-021 | Ceiling Paint | 7/28/2017 | 2/14/2019 |
| PT-022 | Door Paint | 7/28/2017 | 2/14/2019 |
| PT-023 | Wall Paint | 7/28/2017 | 2/14/2019 |
| PT-024 | Wall Paint - NOT USED | 7/28/2017 | |
| PT-025 | Wall Paint (Accent Wall) | 7/28/2017 | 1/29/2018 |
| PT-026 | Bulkhead Paint | 1/29/2018 | |
| PT-027 | Trellis Paint | 5/25/2018 | |
| PT-028 | Wall Paint | 7/28/2017 | 1/29/2018 |
| PT-029 | Ceiling Paint | 7/28/2017 | 5/25/2018 |
| PT-030 | Door & Frame Paint | 7/28/2017 | |
| PT-032 | Ceiling & Duct Work Paint | 2/14/2019 | |
| PT-033 | Listening Room Ceiling Paint | 2/14/2019 | |
| PT-034 | Door Paint | 2/14/2019 | |
| PT-041 | Column Paint | 2/14/2019 | |
| PT-045 | Wall Paint | 2/14/2019 | |
| CUTSHEETS | | | |
| | | | |
| **RESILIENT BASE (RB)** | | | |
| RB-003 | Wall Base | 7/28/2017 | 2/14/2019 |
| RB-008 | Wall Base | 7/28/2017 | 2/14/2019 |
| RB-009 | Wall Base | 7/28/2017 | 2/14/2019 |
| RB-010 | Wall Base | 7/28/2017 | 2/14/2019 |
| | | | |
| **RESILIENT FLOORING (RF)** | | | |
| RF-002 | Fitness Flooring | 7/28/2017 | 2/14/2019 |
| RF-003 | Fitness Flooring Pad (Optional) | 7/28/2017 | 1/29/2018 |
| RF-004 | Resilient Flooring - NOT USED | 7/28/2017 | 2/14/2019 |
| RF-005 | Resilient Flooring | 7/28/2017 | 1/29/2018 |
| RF-006 | Fitness Flooring | 2/14/2019 | |
| | | | |
| **TILE BASE (TB)** | | | |
| TB-003 | Wall Base Tile | 7/28/2017 | 2/14/2019 |
| TB-004 | Wall Base Tile | 2/14/2019 | |
| | | | |

| Control # | Item Name | Issue Date | Revision Date |
|---|---|---|---|
| **TILE CEILING (TC)** | | | |
| TC-001 | Acoustical Ceiling Tile | 7/28/2017 | 2/14/2019 |
| TC-002 | Acoustical Ceiling Tile | 7/28/2017 | |
| TC-003 | Acoustical Ceiling Tile | 7/28/2017 | |
| CUTSHEETS | | | |
| | | | |
| **TILE FLOOR (TF)** | | | |
| TF-002 | Floor Tile | 7/28/2017 | 5/25/2018 |
| TF-003 | Floor Tile (Swimming Pool Accent) | 7/28/2017 | 2/14/2019 |
| TF-005 | Floor Tile | 7/28/2017 | 5/25/2018 |
| TF-006 | Floor Tile | 2/14/2019 | |
| | | | |
| **TILE WALL (TW)** | | | |
| TW-002 | Wall Tile | 7/28/2017 | 5/25/2018 |
| TW-003 | Wall Tile (Accent 1) - NOT USED | 7/28/2017 | 2/14/2019 |
| TW-004 | Wall Tile | 7/28/2017 | 2/14/2019 |
| TW-007 | Wall Tile | 7/28/2017 | 2/14/2019 |
| TW-008 | Wall Tile | 7/28/2017 | 2/14/2019 |
| TW-009 | Wall Tile | 7/28/2017 | 2/14/2019 |
| TW-011 | Wall Tile | 2/14/2019 | |
| TW-013 | Wall Tile | 2/14/2019 | |
| | | | |
| **TRANSITION STRIPS (TS)** | | | |
| TS-001 | Resilient Transition Strip | 7/28/2017 | |
| TS-003 | ReFuel Wall Finish Transition | 9/21/2018 | |
| TS-004 | Corner Trim | 2/14/2019 | |
| | | | |
| **WOOD (WD)** | | | |
| WD-003 | Wood Planks | 7/28/2017 | 5/25/2018 |
| WD-004 | Wood Veneer Panels | 7/28/2017 | |
| | | | |
| **WOOD BASE (WB)** | | | |
| WB-001 | Wood Base @ Wood Veneer Panels | 7/28/2017 | 5/25/2018 |
| | | | |
| **WOOD FINISH (WF)** | | | |
| WF-001 | Wood Stain (Pink) | 7/28/2017 | |
| WF-002 | Wood Stain (Aqua Blue) | 7/28/2017 | |
| WF-003 | Wood Stain | 5/25/2018 | |
| WF-004 | Wood Stain | 2/14/2019 | |
| | | | |
| **WALL GRAPHIC (WG)** | | | |
| WG-001 | Graphic Panel (Stationary) | 7/28/2017 | 2/14/2019 |
| | | | |
| **WALL PANEL (WP)** | | | |
| WP-001 | Perforated Panels | 7/28/2017 | |
| WP-002 | Metal Wall Panel | 7/28/2017 | 9/21/2018 |
| WP-003 | Metal Wall Panel | 7/28/2017 | 2/14/2019 |
| WP-004 | Wall Panel | 7/28/2017 | 2/14/2019 |
| WP-007 | Metal Wall Panel | 7/28/2017 | 9/21/2018 |
| WP-008 | Stainless Steel Panel | 7/28/2017 | 1/29/2018 |
| CUTSHEETS | | | |
| | | | |
| ***MILLWORK*** | | | |
| **MILLWORK** | | | |
| ML-001 | Rope Screen with Canopy Fabrication | 2/14/2019 | |
| ML-002 | Ladder Storage | 2/14/2019 | |
| ML-003 | Net Shelving Fabrication | 2/14/2019 | |
| ML-006 | Tactic Bench | 2/14/2019 | |
| ML-007 | Tactic Built-In Shelves | 2/14/2019 | |
| ML-008 | Listening Room Ledge | 2/14/2019 | |
| CUTSHEETS | | | |

| Control # | Item Name | Issue Date | Revision Date |
|---|---|---|---|
| **COUNTERTOPS (CT)** | | | |
| CT-001 | Countertop Surface - NOT USED | 7/28/2017 | |
| CT-002 | Vanity Top Surface | 7/28/2017 | 1/29/2018 |
| CT-003 | Vanity Top Surface | 7/28/2017 | 1/29/2018 |
| CT-004 | Countertop Surface | 7/28/2017 | |
| CT-005 | Countertop Surface | 7/28/2017 | |
| CT-006 | Countertop Surface | 2/14/2019 | |
| | | | |
| **MILLWORK FABRIC (FAB)** | | | |
| FAB-001 | Fabric | 2/14/2019 | |
| | | | |
| **MILLWORK NET (NT)** | | | |
| NT-001 | Net | 2/14/2019 | |
| | | | |
| **PLASTIC LAMINATE (LA)** | | | |
| LA-001 | Plastic Laminate | 7/28/2017 | 1/29/2018 |
| LA-002 | Plastic Laminate | 7/28/2017 | 1/29/2018 |
| LA-003 | Plastic Laminate | 7/28/2017 | 1/29/2018 |
| LA-004 | Plastic Laminate | 2/14/2019 | |
| LA-005 | Plastic Laminate | 2/14/2019 | |
| LA-006 | Plastic Laminate | 2/14/2019 | |
| LA-007 | Plastic Laminate | 2/14/2019 | |
| | | | |
| **MILLWORK ROPE (RO)** | | | |
| RO-001 | Rope | 2/14/2019 | |
| RO-002 | Rope | 2/14/2019 | |
| | | | |
| **MILLWORK WOOD FINISH (WF)** | | | |
| WF-004 | Wood Stain | 2/14/2019 | |
| | | | |
| ***PLUMBING*** | | | |
| **PLUMBING FIXTURES (PL)** | | | |
| PLUMBING ASSEMBLY SCHEDULE | | 7/28/2017 | 2/14/2019 |
| PL-102 | Undercounter Lavatory | 7/28/2017 | |
| PL-103 | Wall-Mounted Lavatory | 7/28/2017 | 2/14/2019 |
| PL-104 | Wall-Mounted Lavatory | 7/28/2017 | |
| PL-105 | Mop Sink | 7/28/2017 | 1/29/2018 |
| PL-106 | Sink | 7/28/2017 | 5/25/2018 |
| PL-107 | Sink | 7/28/2017 | 1/29/2018 |
| PL-108 | Sink Drain | 2/14/2019 | |
| PL-109 | P-Trap | 2/14/2019 | |
| PL-110 | P-Trap Cover | 2/14/2019 | |
| PL-111 | Sink Bracket Kit | 2/14/2019 | |
| PL-202 | Faucet | 7/28/2017 | |
| PL-203 | Faucet | 7/28/2017 | |
| PL-204-FI | Faucet for mop sink, Fiat | 7/28/2017 | 1/29/2018 |
| PL-204-MO | Faucet for Mop Sink, Moen | 7/28/2017 | 1/29/2018 |
| PL-205 | Faucet | 7/28/2017 | 1/29/2018 |
| PL-206 | Faucet | 7/28/2017 | 1/29/2018 |
| PL-207 | Water Filler | 7/28/2017 | |
| PL-208 | Faucet | 2/14/2019 | |
| PL-209 | Aerator Kit | 2/14/2019 | |
| PL-303 | Water Closet | 7/28/2017 | 1/29/2018 |
| PL-304 | Water Closet Seat | 7/28/2017 | |
| PL-305-MO | Flushometer, Moen | 7/28/2017 | 1/29/2018 |
| PL-305-SL | Flushometer, Sloan | 7/28/2017 | 1/29/2018 |
| PL-306 | Waterless Urinal | 7/28/2017 | |
| PL-307 | Water Closet | 2/14/2019 | |
| PL-308 | Flushometer | 2/14/2019 | |

| Control # | Item Name | Issue Date | Revision Date |
|---|---|---|---|
| PL-402-KO | Accessible Head Shower Assembly, Kohler | 7/28/2017 | 1/29/2018 |
| PL-402-MO | Accessible Head Shower Assembly, Moen | 7/28/2017 | 1/29/2018 |
| PL-403-KO | Shower Head, Kohler | 7/28/2017 | 2/14/2019 |
| PL-403-MO | Shower Head, Moen | 7/28/2017 | 1/29/2018 |
| PL-404 | Shower Arm | 7/28/2017 | |
| PL-405 | Shower Drain | 2/14/2019 | |
| PL-803-KO | Temp Balancing Valve, Kohler | 7/28/2017 | 2/14/2019 |
| PL-803-MO | Temp Balancing Valve, Moen | 7/28/2017 | 1/29/2018 |
| PL-804-KO | Temp Balancing Valve Trim | 7/28/2017 | 2/14/2019 |
| PL-804-MO | Temp Balancing Valve Trim (Alternate) | 7/28/2017 | 1/29/2018 |
| PL-805 | Faucet Valve and Sensor Kit | 2/14/2019 | |
| PL-806 | Shower Elbow with Check Valve | 2/14/2019 | |
| PL-900 | Recessed Wall Mounted Water Bottle Filling Station | 2/14/2019 | |
| PL-901 | Wall Mounted Beverage Cup Dispenser | 2/14/2019 | |
| CUTSHEETS | | | |
| | | | |
| **OPERABLE PARTITIONS (OP)** | | | |
| OP-001 | Operable Partition | 7/28/2017 | 1/29/2018 |

| | | | |
|---|---|---|---|
| **TOILET PARTITIONS (TP)** | | | |
| TP-001 | Metal Partition and Door | 7/28/2017 | |
| TP-002 | Metal Partition and Door | 7/28/2017 | |
| CUTSHEETS | | | |

| | | | |
|---|---|---|---|
| ***TOILET ACCESSORIES*** | | | |
| **TOILET ACCESSORIES (TA)** | | | |
| TA-101 | Grab Bar | 7/28/2017 | 1/29/2018 |
| TA-102 | Grab Bar | 2/14/2019 | |
| TA-103 | Grab Bar | 2/14/2019 | |
| TA-104 | Grab Bar | 2/14/2019 | |
| TA-201 | Toilet Paper Dispenser | 7/28/2017 | 1/29/2018 |
| TA-202 | Toilet Paper Holder | 2/14/2019 | |
| TA-402-BA | Purse/Coat Hook, Bath Source | 7/28/2017 | 1/29/2018 |
| TA-402-MO | Purse/Coat Hook, Moen | 7/28/2017 | 2/14/2019 |
| TA-403 | Robe Hook | 2/14/2019 | |
| TA-702 | Folding Shower Seat | 7/28/2017 | 1/29/2018 |
| TA-800-DY | Hand Dryer, Dyson | 7/28/2017 | 2/14/2019 |
| TA-800-EX | Hand Dryer , Excel | 7/28/2017 | 1/29/2018 |
| TA-801 | Napkin/Tampon Vendor | 7/28/2017 | 1/29/2018 |
| TA-802 | Soap Dispenser | 7/28/2017 | 1/29/2018 |
| TA-803 | Seat Cover Dispenser | 7/28/2017 | 1/29/2018 |
| TA-804 | Napkin Disposal | 7/28/2017 | |
| TA-805 | Wall-Mounted Soap Dispenser | 7/28/2017 | 1/29/2018 |
| TA-806 | Clear Mirror | 7/28/2017 | |
| TA-807 | Napkin Disposal, Surface Mounted | 5/25/2018 | |
| TA-808 | Automatic Hand Dryer | 2/14/2019 | |
| TA-809 | Paper Towel and Waste Dispenser | 2/14/2019 | |
| TA-810 | Lavatory Mirror | 2/14/2019 | |
| TA-811 | Seat Cover Dispenser | 2/14/2019 | |
| TA-812 | Soap Dispenser | 2/14/2019 | |
| TA-901 | Baby Changing Station | 7/28/2017 | |
| CUTSHEETS | | | |

## Marriott Legal Disclaimer

These design guidelines and all materials, procedures, systems and content herein contained or depicted (the “Design Guidelines”) have been prepared for and/or developed by Marriott International, Inc. or its affiliate (“Marriott”), and are the sole and exclusive property of Marriott, which owns all right, title and interest therein, including all copyright, and which reserves all rights herein. All contents should be used only as authorized by Marriott and should not be copied either in whole or in part without its written consent.

The content herein may be protected by patent, trademark, trade secret, copyright, or other intellectual property and proprietary rights and laws, and is the private and confidential property of Marriott. The contents contain proprietary trade secrets that are the private and confidential property of Marriott. Unauthorized use, disclosure, or reproduction of any kind of the Design Guidelines or any contents or material contained in these Design Guidelines is expressly prohibited. The contents hereof are to be returned immediately upon termination of any relationship or agreement giving the user authorization to possess or use such information or materials. Marriott reserves the right to take all actions and seek all available remedies, whether legal and/or equitable, for any unauthorized or illegal use of the Design Guidelines or any of its content.

These documents are intended to serve as a starting point for complete design to be performed by licensed professionals. They have been prepared with the sole purpose of conveying the brand benchmark for this particular product only. The architect, engineer, designer or any other design professional of record is responsible for compliance with any and all laws or regulations of any type or description governing the proposed construction.

These design guidelines may be altered, amended or supplemented by Marriott in its sole discretion from time to time. It is your responsibility to familiarize yourself with the contents of the Design Guidelines and to keep yourself apprised of any and all updates to it on https://lobo.marriott.com

In the event of any inconsistency or conflict between a provision in these Design Guidelines and any federal, provincial, state or local statute, regulation, order or other law, such law will supersede the conflicting or inconsistent provision(s) of these Design Guidelines in all properties subject to that law. All owners/developers should seek independent legal counsel for advice concerning application of and compliance with any applicable law.

Architectural Lighting - Box Light

# ALB-01

Revision 1

Architectural Lighting - Box Light

Issue Date: 28 JUL 2017
Revision Date: 29 JAN 2018

| | |
|---|---|
| Item Name | Recessed Fixture |
| Type: | Linear Box |
| Description: | Linear 2x4 fixture, architectural center, linear lens |
| Manufacturer: | Eaton/Corelite |
| Model #: | BRG-WS-2L35-LD2-UNV-24-T1-STD |
| Dimensions: | 2' x 4' |
| Finish: | White |
| Lens/Shade: | Acrylic prismatic frosted |
| Mount: | Recessed ACT |
| On Dimming System: | No |
| Dimming Type: | 0 -10V |
| Lamp Type: | LED |
| Lamp Kelvin: | 3500K |
| Lamp CRI: | 85 |
| Delivered Lumens (LED) or Mean Lumens (Non-LED): | 4148 |
| Fixture Input (Max. Watts): | 38.5 |
| Voltage: | 120 - 277 |
| Lead Time: | In stock or 4 weeks |
| Warranty: | Five year warranty |

## SPECIAL INSTRUCTIONS

MANUFACTURER

Eaton Lighting

Kathleen Kenny 678-447-5208 KathleenKenny@Eaton.com

ALTERNATE MANUFACTURER 1

ALTERNATE MANUFACTURER 2

ALTERNATE MANUFACTURER 3

AREAS

Public Space

Break Room

Work Area

# ALB-02

Revision 1

Architectural Lighting - Box Light

Issue Date: 28 JUL 2017
Revision Date: 29 JAN 2018

| | |
|---|---|
| Item Name | Recessed Fixture |
| Type: | Linear Box |
| Description: | Linear 2x4 fixture, architectural center, linear lens |
| Manufacturer: | Eaton/Corelite |
| Model #: | BRG-WS-2L35-LD2-UNV-24-T1-STD |
| Dimensions: | 2' x 4' |
| Finish: | White |
| Reflector: | Acrylic prismatic frosted |
| Mount: | Recessed |
| On Dimming System: | Yes |
| Dimming Type: | 0 -10V |
| Lamp Type: | LED |
| Lamp Kelvin: | 3500K |
| Lamp CRI: | 85 |
| Delivered Lumens (LED) or Mean Lumens (Non-LED): | 4148 |
| Fixture Input (Max. Watts): | 38.5 |
| Voltage: | 120 - 277 |
| Lead Time: | In stock or 4 weeks |
| Warranty: | Five year warranty |

## SPECIAL INSTRUCTIONS

MANUFACTURER

Eaton Lighting

Kathleen Kenny 678-447-5208 KathleenKenny@Eaton.com

ALTERNATE MANUFACTURER 1

ALTERNATE MANUFACTURER 2

ALTERNATE MANUFACTURER 3

AREAS

Public Space

Employee Toilet (w/c)

Housekeeping (Re:Fresh)

Laundry

# Architectural Lighting - Controls

Issue Date: 28 JUL 2017

Revision Date:

| | |
|---|---|
| Item Name | Lighting Controls - Lobby |
| Description: | Lighting Control Channel Source Controller and Touch Screen |
| Manufacturer: | Eaton/ Cooper |
| Model: | LCCP Communication Cable 500' spool-plenum rated used for Digital Switch Networks Only<br>SC120-24-UN-3P-ML-20 24 Channel Source Controller 120V 20 amp 3 Phase<br>TSC-30-SS-NA 3/5" Color Touchscreen, NA, Stainless Steel<br>CLS-6TSB-W-IR 6 Small buttons, white, IR<br>ENGRV-6BTNS-W 6 Small Button white requires custom text order form |
| Lead Time: | To be verified |
| Warranty: | Standard product warranty based on date of product shipment. See product documentation for standard warranty information. |
| Note: | Certified Factory Startup Scheduled Room Controller, Green Gate or Illumin Commissioning trip and training by Eaton Lighting Systems Factory Rep |
| Note: | Refer to attached cutsheets for more information |

## SPECIAL INSTRUCTIONS

MANUFACTURER

Eaton Lighting

Kathleen Kenny 678-447-5208 KathleenKenny@Eaton.com

ALTERNATE MANUFACTURER 1

ALTERNATE MANUFACTURER 2

ALTERNATE MANUFACTURER 3

AREAS

Public Space

- Bar (W XYZ)
- Front Desk (Check-in)
- Lobby (Re:Mix)
- Snack Bar (Re:Fuel)

Issue Date: 28 JUL 2017

Revision Date:

| | |
|---|---|
| Item Name | Lighting Controls - Fitness |
| Description: | Room Controller with dimming preset scenes and daylight sensor |
| Manufacturer: | Eaton/ Cooper |
| Model: | Refer to attached cutsheets |
| Lead Time: | To be verified |
| Warranty: | Standard product warranty based on date of product shipment. See product documentation for standard warranty information. |

## SPECIAL INSTRUCTIONS

MANUFACTURER

Eaton Lighting

Kathleen Kenny 678-447-5208 KathleenKenny@Eaton.com

ALTERNATE MANUFACTURER 1

ALTERNATE MANUFACTURER 2

ALTERNATE MANUFACTURER 3

AREAS

Public Space

Fitness Center (Re:Charge)

Issue Date: 28 JUL 2017

Revision Date:

| | |
|---|---|
| Item Name | Lighting Controls - Meeting |
| Description: | Multi-Load Decorator Dimmer Wallstation |
| Manufacturer: | Eaton/ Cooper |
| Model: | WBSD-DEC-C1<br>WBSD-010DEC-C1 |
| Lead Time: | To be verified |
| Warranty: | Standard product warranty based on date of product shipment. See product documentation for standard warranty information. |
| Note: | Refer to attached cutsheets for more information |

## SPECIAL INSTRUCTIONS

MANUFACTURER

Eaton Lighting

Kathleen Kenny 678-447-5208 KathleenKenny@Eaton.com

ALTERNATE MANUFACTURER 1

ALTERNATE MANUFACTURER 2

ALTERNATE MANUFACTURER 3

AREAS

Public Space

Meeting (Tactic)

# Architectural Lighting - Strip Lighting

Issue Date: 28 JUL 2017

Revision Date: 29 JAN 2018

| | |
|---|---|
| Item Name | Strip Fixture |
| Type: | Strip |
| Description: | 4' LED Strip Lensed |
| Manufacturer: | Eaton/Metalux |
| Model #: | 4SNLED-LD5-27SL-LW-UNV-L830-CD1-U |
| Dimensions: | 48" L x 3-7/8" H x 3" W |
| Finish: | White |
| Lens/Shade: | Full Frosted Lens |
| Mount: | Surface |
| On Dimming System: | No |
| Dimming Type: | 0 - 10v |
| Lamp Type: | LED |
| Lamp Kelvin: | 3000K |
| Lamp CRI: | 85 |
| Delivered Lumens (LED) or Mean Lumens (Non-LED): | 2857 |
| Fixture Input (Max. Watts): | 25 |
| Voltage: | 120-277 |
| Lead Time: | In stock or 4 weeks |
| Warranty: | Five year warranty |

## SPECIAL INSTRUCTIONS

MANUFACTURER

Eaton Lighting

Kathleen Kenny 678-447-5208 KathleenKenny@Eaton.com

ALTERNATE MANUFACTURER 1

ALTERNATE MANUFACTURER 2

ALTERNATE MANUFACTURER 3

AREAS

Public Space

Snack Bar (Re:Fuel)

Issue Date: 28 JUL 2017

Revision Date: 29 JAN 2018

| | |
|---|---|
| Item Name | Strip Fixture |
| Type: | Strip |
| Description: | 4' LED Strip Lensed |
| Manufacturer: | Eaton/Metalux |
| Model #: | 4SNLED-LD5-27SL-LW-UNV-L830-CD1-U |
| Dimensions: | 48" L x 3-7/8" H x 3" W |
| Finish: | White |
| Lens/Shade: | Full Frosted Lens |
| Mount: | Surface |
| On Dimming System: | No |
| Dimming Type: | 0 - 10v |
| Lamp Type: | LED |
| Lamp Kelvin: | 3000K |
| Lamp CRI: | 85 |
| Delivered Lumens (LED) or Mean Lumens (Non-LED): | 2857 |
| Fixture Input (Max. Watts): | 25 |
| Voltage: | 120-277 |
| Lead Time: | In stock or 4 weeks |
| Warranty: | Five year warranty |

## SPECIAL INSTRUCTIONS

MANUFACTURER

Eaton Lighting

Kathleen Kenny 678-447-5208 KathleenKenny@Eaton.com

ALTERNATE MANUFACTURER 1

ALTERNATE MANUFACTURER 2

ALTERNATE MANUFACTURER 3

AREAS

Public Space

Fitness Center (Re:Charge)

Issue Date: 28 JUL 2017
Revision Date: 29 JAN 2018

| | |
|---|---|
| Item Name | Strip Fixture |
| Type: | Strip |
| Description: | 4' LED Strip Lensed |
| Manufacturer: | Eaton/Metalux |
| Model #: | 4SNLED-LD5-46SL-LN-UNV-L830-CD1-U |
| Dimensions: | 48" L x 3-7/8" H x 3" W |
| Finish: | White |
| Lens/Shade: | Semi Frosted Lens |
| Mount: | Surface |
| On Dimming System: | No |
| Dimming Type: | 0 - 10v |
| Lamp Type: | LED |
| Lamp Kelvin: | 3000K |
| Lamp CRI: | 85 |
| Delivered Lumens (LED) or Mean Lumens (Non-LED): | 4670 |
| Fixture Input (Max. Watts): | 34.6 |
| Voltage: | 120-277 |
| Lead Time: | In stock or 4 weeks |
| Warranty: | Five year warranty |

## SPECIAL INSTRUCTIONS

MANUFACTURER

Eaton Lighting

Kathleen Kenny 678-447-5208 KathleenKenny@Eaton.com

ALTERNATE MANUFACTURER 1

ALTERNATE MANUFACTURER 2

ALTERNATE MANUFACTURER 3

AREAS

See Area Addendum

# ALJ-03

Revision 1

Architectural Lighting - Strip Lighting

| | | | |
|---|---|---|---|
| Project: | Public Spaces | Issue Date: | 07/28/2017 |
| Project #: | ALOFT Hotels G4.0 | Revision Date: | 01/29/2018 |

| Public Space |
|---|
| Location |
| Chute |
| Electrical |
| Engineer |
| Janitor |
| Luggage |
| Mechanical |
| Storage |

Issue Date: 28 JUL 2017

Revision Date: 29 JAN 2018

| | |
|---|---|
| Item Name | Strip Light |
| Type: | Strip with Control |
| Description: | Strip fixture lensed wall or ceiling mount with integral sensor |
| Manufacturer: | Eaton/Metalux |
| Model #: | 4SWLED-LD4-48HL-LW-UNV-835-CD1-SVPD2-U Order one ISHH01 per location for programming) |
| Dimensions: | 4' length x 4-11/16" W |
| Lens/Shade: | Full Frost Lens Wide |
| Mount: | Surface |
| On Dimming System: | TBD |
| Dimming Type: | 0 - 10V |
| Lamp Type: | LED |
| Lamp Kelvin: | 3500 K |
| Lamp CRI: | 85 |
| Delivered Lumens (LED) or Mean Lumens (Non-LED): | 4800 |
| Fixture Input (Max. Watts): | 43.3 |
| Voltage: | 120 - 277 |
| Lead Time: | In stock or 4 weeks |
| Warranty: | Five year warranty |

## SPECIAL INSTRUCTIONS

MANUFACTURER

Eaton Lighting

Kathleen Kenny 678-447-5208 KathleenKenny@Eaton.com

ALTERNATE MANUFACTURER 1

ALTERNATE MANUFACTURER 2

ALTERNATE MANUFACTURER 3

AREAS

Public Space

BOH Corridor

Clean

Elevator Machine Room

Housekeeping (Re:Fresh)

Ice

Stair

Issue Date: 14 FEB 2019

Revision Date:

| | |
|---|---|
| Item Name | Cove Light |
| Type: | Cove Light |
| Description: | Wet Listed Asmmetrical Cove Light |
| Manufacturer: | Elliptipar, a division of The Lighting Quotient |
| Model #: | S315R-R-varies-L-S-00-8-0P-0-35-00 |
| Dimensions: | 48" to 8'; to fit site conditions |
| Finish: | Anodized optical housing/head sink; mill finish brackets and driver enclosure. painted stainless steel luminaire hardware for natatorium use |
| Trim: | |
| Lens/Shade: | Sealed Glass |
| Mount: | Sidearms with mounting tabs |
| Dimming Type: | Non-dimming |
| Lamp Kelvin: | 3500K |
| Lamp CRI: | 80+ |
| Delivered Lumens (LED) or Mean Lumens (Non-LED): | |
| Fixture Input (Max. Watts): | varies |
| Voltage: | 120-277v |
| Lead Time: | |
| Warranty: | 5 year warranty |

## SPECIAL INSTRUCTIONS

MANUFACTURER

The Lighting Quotient 203-931-4455

ALTERNATE MANUFACTURER 1

ALTERNATE MANUFACTURER 2

ALTERNATE MANUFACTURER 3

AREAS

Public Space

Indoor Pool (Splash)

Architectural Lighting - Decorative Architectural Light

Issue Date: 28 JUL 2017

Revision Date: 14 FEB 2019

| | |
|---|---|
| Item Name | Wall Fixture |
| Type: | Wall Mount Asymmetric LED Luminary |
| Manufacturer: | Eaton Lighting |
| Model #: | ASYX-WM-S-1-NT-U-W-L40-1-UNV-F-X |
| Dimensions: | 12.75" x 8.17" x 4.60" |
| Finish: | White |
| Mount: | Wall Mount |
| Dimming Type: | |
| Lamp Type: | LED (Included with fixture) |
| Lamp Kelvin: | 4000K |
| Lumens: | 14745 |
| Lamp CRI: | I40 |
| Voltage: | UNV 347 |
| Environment: | Nataorium |
| Orientation: | Uplight |
| Distribution: | Wide Throw |
| Fixture Input (Wax. Watts): | 54.7 W |
| Average Rated Life (Hours): | 60,000+ hrs. |
| Lead Time: | In stock or 4 weeks |
| Warranty: | Five Year Warranty |

## SPECIAL INSTRUCTIONS

MANUFACTURER

Eaton Lighting

Kathleen Kenny 678-447-5208 KathleenKenny@Eaton.com

ALTERNATE MANUFACTURER 1

ALTERNATE MANUFACTURER 2

ALTERNATE MANUFACTURER 3

AREAS

Public Space

Indoor Pool (Splash)

# ALK-05-A

Revision 1

Architectural Lighting - Decorative Architectural Light

Issue Date: 28 JUL 2017
Revision Date: 29 JAN 2018

| | |
|---|---|
| Item Name | Track System |
| Type: | Track + Live end |
| Description: | 4' Track components |
| Manufacturer: | Eaton/Halo |
| Model #: | L651MB, L901 |
| Dimensions: | 44-1/8" L x 1-3/8" W x 11/16" H |
| Finish: | Matte Black |
| Mount: | Surface |
| Voltage: | 120 |
| Lead Time: | In stock or 4 weeks |
| Warranty: | Five year warranty |

## SPECIAL INSTRUCTIONS

MANUFACTURER

Eaton Lighting

Kathleen Kenny 678-447-5208 KathleenKenny@Eaton.com

ALTERNATE MANUFACTURER 1

ALTERNATE MANUFACTURER 2

ALTERNATE MANUFACTURER 3

AREAS

Public Space

Lobby (Re:Mix)

# ALK-05-B

Revision 1

Architectural Lighting - Decorative Architectural Light

Issue Date: 28 JUL 2017
Revision Date: 29 JAN 2018

| | |
|---|---|
| Item Name | Track System |
| Type: | Track + Live end |
| Description: | 8' Track components |
| Manufacturer: | Eaton/Halo |
| Model #: | L652MB, L901 |
| Dimensions: | 92-1/8" L x 1-3/8" W x 11/16" H |
| Finish: | Matte Black |
| Mount: | Surface |
| Voltage: | 120 |
| Lead Time: | In stock or 4 weeks |
| Warranty: | Five year warranty |

## SPECIAL INSTRUCTIONS

MANUFACTURER

Eaton Lighting

Kathleen Kenny 678-447-5208 KathleenKenny@Eaton.com

ALTERNATE MANUFACTURER 1

ALTERNATE MANUFACTURER 2

ALTERNATE MANUFACTURER 3

AREAS

Public Space

Lobby (Re:Mix)

Issue Date: 28 JUL 2017

Revision Date: 29 JAN 2018

| | |
|---|---|
| Item Name | Track Head |
| Type: | Track Head |
| Description: | Low profile track fixture |
| Manufacturer: | Eaton/Halo |
| Model #: | L80815NF9030MB |
| Dimensions: | 6.1" L x 3.2" D x 5.4" H |
| Finish: | Matte Black |
| Reflector: | 25 degree |
| Mount: | Track |
| On Dimming System: | Yes |
| Dimming Type: | LE/TE |
| Lamp Type: | LED |
| Lamp Kelvin: | 3000K |
| Lamp CRI: | 90 |
| Delivered Lumens (LED) or Mean Lumens (Non-LED): | 1506 |
| Voltage: | 120 |
| Lead Time: | In stock or 4 weeks |
| Warranty: | Five year limited warranty |

## SPECIAL INSTRUCTIONS

MANUFACTURER

Eaton Lighting

Kathleen Kenny 678-447-5208 KathleenKenny@Eaton.com

ALTERNATE MANUFACTURER 1

ALTERNATE MANUFACTURER 2

ALTERNATE MANUFACTURER 3

AREAS

Public Space

Lobby (Re:Mix)

Architectural Lighting - Recessed can

Issue Date: 28 JUL 2017

Revision Date: 29 JAN 2018

| | |
|---|---|
| Item Name | Recessed Fixture |
| Type: | Downlight |
| Description: | 4" Downlight Lensed Matt Black Black Baffle Wet Location |
| Manufacturer: | Eaton/Halo |
| Model #: | H245ICAT, ML4D09NFL930E, TL43R-2G-MBBB |
| Dimensions: | 5-5/16" W x 8-7/8" L x 2.5" Aperature 5" Trim |
| Finish: | Matte Black |
| Trim: | Matte Black |
| Reflector: | Narrow Floor 25 degree |
| Lens/Shade: | Clear Lensed |
| Mount: | Recessed |
| On Dimming System: | Yes |
| Dimming Type: | LE/TE |
| Lamp Type: | LED |
| Lamp Kelvin: | 3000K |
| Lamp CRI: | 90 |
| Delivered Lumens (LED) or Mean Lumens (Non-LED): | 916 |
| Voltage: | 120 - 277 |
| Lead Time: | In stock or 4 weeks |
| Warranty: | Five year limited warranty |

## SPECIAL INSTRUCTIONS

MANUFACTURER

Eaton Lighting

Kathleen Kenny 678-447-5208 KathleenKenny@Eaton.com

ALTERNATE MANUFACTURER 1

ALTERNATE MANUFACTURER 2

ALTERNATE MANUFACTURER 3

AREAS

Public Space

Business Center (In Touch)

Front Desk (Check-in)

Issue Date: 28 JUL 2017

Revision Date: 29 JAN 2018

| | |
|---|---|
| Item Name | Recessed Fixture |
| Type: | Downlight |
| Description: | 5" Downlight Specular reflector white flange |
| Manufacturer: | Eaton/Halo |
| Model #: | H750ICAT-ML5606927-592SC |
| Dimensions: | 7" H x 10-1/2" W x 7-3/8" L x 4.8" Aperature |
| Finish: | Reflector, White Flange |
| Trim: | Specular |
| Reflector: | Specular |
| Lens/Shade: | None |
| Mount: | Recessed |
| On Dimming System: | Yes |
| Dimming Type: | LE/TE |
| Lamp Type: | LED |
| Lamp Kelvin: | 3000 |
| Lamp CRI: | 90 |
| Delivered Lumens (LED) or Mean Lumens (Non-LED): | 600 |
| Voltage: | 120 - 277 |
| Lead Time: | In stock or 4 weeks |
| Warranty: | Five year warranty |

## SPECIAL INSTRUCTIONS

MANUFACTURER

Eaton Lighting

Kathleen Kenny 678-447-5208 KathleenKenny@Eaton.com

ALTERNATE MANUFACTURER 1

ALTERNATE MANUFACTURER 2

ALTERNATE MANUFACTURER 3

AREAS

Public Space

- Pool (Splash) Restroom (w/c)
- Meeting (Tactic)
- Pool Storage
- Public Restroom - Men's (w/c)
- Public Restroom - Women's (w/c)

# Architectural Lighting - Exit Lighting

Issue Date: 28 JUL 2017
Revision Date: 29 JAN 2018

| | |
|---|---|
| Item Name | Exit Fixture |
| Type: | Exit |
| Description: | Exit, multi mount |
| Manufacturer: | Eaton/Surelites |
| Model #: | EUX7RSD |
| Dimensions: | 13-3/4" W x 7-3/8" Hx 2-7/16" D |
| Lettering: | Red |
| Mount: | Multi-Mount |
| On Dimming System: | No |
| Lamp Type: | LED |
| Voltage: | 120/277 UNV |
| Lead Time: | In Stock or 4 weeks |
| Warranty: | Fixture: 5 year<br>Battery: 7 year pro-rata |

## SPECIAL INSTRUCTIONS

MANUFACTURER

Eaton Lighting

Kathleen Kenny 678-447-5208 KathleenKenny@Eaton.com

ALTERNATE MANUFACTURER 1

ALTERNATE MANUFACTURER 2

ALTERNATE MANUFACTURER 3

AREAS

Public Space

Exit

Architectural Lighting Cutsheets

## DESCRIPTION

The Bridge™ LED recessed offers a traditional yet modern design with the latest in solid-state lighting technology. High performing WaveStream™ optics allow for maximum energy savings and optimal illumination in a ultra-minimalistic shallow recessed fixture. Two WaveStream optic options are available; a fully uniform pattern and a square pattern that provides a unique translucent appearance without sacrificing performance. Additional shielding options are also available including rectangular perf, round perf, and nano-prism inlays. Available in 2x2, 2x4, 1x4 sizes along with several popular metric sizes, the Bridge is highly configurable with well-thought-out options and a number of architectural styles for application versatility.

| | | Type |
|---|---|---|
| Catalog # | BRG-WS-40L35-LD2-UNV-24-T1-STD | ALB-01 |
| Project | Aloft | Revision Date: |
| Comments | | Date |
| Prepared by | Kathleen Kenny | |

## SPECIFICATION FEATURES

**Construction**
Shallow 3-7/8" deep housing is a 22 gauge steel reflector with injection molded high-reflectance polycarbonate end plates securely attached with integral snaps and screws for strength, rigidity and the elimination of gaps. WaveStream light engine with extruded aluminum heatsinks span across the bottom of the luminaire. Drivers can be accessed via plenum. Large access plate for supply connection. Fixture weight: 20.0 lbs.

**Optics**
Optical grade acrylic embedded with patented WaveStream Accu-Aim™ optics for optimal distribution, excellent uniformity, and high performance. Center light engine becomes virtually clear in the off-state.

**Shielding**
Perf pattern and nano-prismatic inlays are available as additional aesthetic options. Perf inlay available in round or rectangular pattern. Nano-prism inlay is a high light transmission material offering additional brightness mitigation.

**Finish**
Fixture housing and back reflector are high reflectance white using electrostatically applied polyester powder coat paint for durability and luminous uniformity.

**Electrical**
Long-life LED system coupled with electrical driver to deliver optimal performance. Projected life is 100,000 at 75% lumen output. LEDs are available in 3000K, 3500K or 4000K with a typical CRI ≤ 85.

Standard drivers are 0-10 volt continuous dimming that work with any 0-10V control/dimmer. Or, specify Digital Addressable Lighting Interface (DALI) drivers; for use with Fifth Light controls. See ordering information for details.

**Mounting**
Universal flange design works with most lay-in ceiling types. Integral pry-out tabs secure luminaire to ceiling grid from above. Fixture offers tie-in locations for tie-wire on all corners. Consult local code for appropriate tie-wire recommendations. See Technical Notes section for drywall frame kit and surface mount kit options.

**Compliance**
Components are UL recognized and luminaires are cULus listed for 25°C ambient environments, damp location listed, and RoHS compliant. DesignLights Consortium™ Qualified and classified for DLC Standard, refer to www.designlights.org for details.

**Warranty**
Five-year warranty.

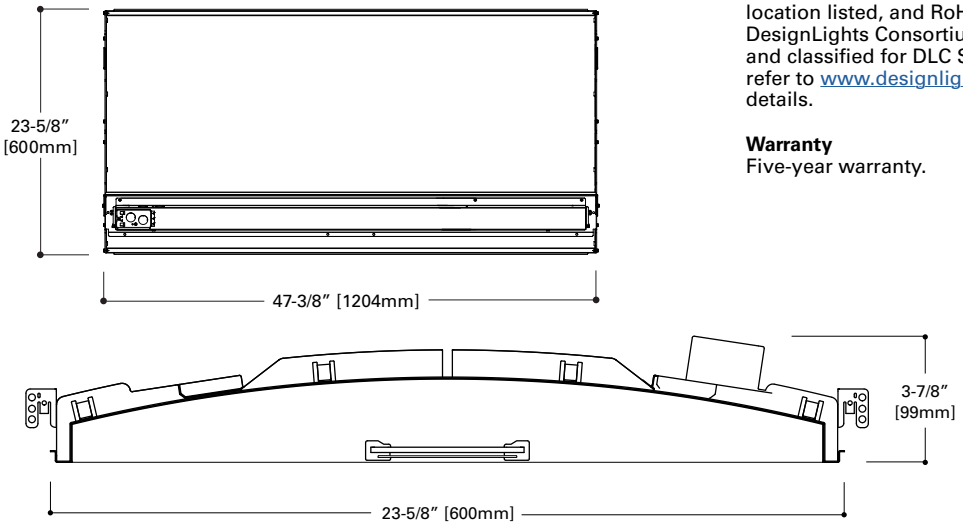

# BRIDGE - BRG

Fully Uniform

**WaveStream™ LED**

**2' x 4' Recessed**
3-7/8" Depth

CERTIFICATION DATA
cULus - 1598
Damp Location Listed
IC Rated
LM79/LM80 Compliant
ROHS Compliant
DesignLights Consortium™ Qualified

LumaWatt Pro
Wireless sensing & control system | with enlighted

powered by fifthlight technology

## ORDERING INFORMATION

**Sample Number: BRG-WS-3L35-LD2-UNV-24-T1-STD-SW-EL14W-AR**

| Series (1) | Optics/Shielding | Light Level (2x4 Nominal delivered lumens) | Color Temperature | LED Version | Input Voltage |
|---|---|---|---|---|---|
| **BRG** = Bridge Recessed | **WS** = WaveStream Fully Uniform<br>**WD** = WaveStream with Round Perf Inlay<br>**WG** = WaveStream with Rectangular Perf Inlay<br>**WN** = WaveStream with Nano-Prism Perf Inlay | **1** = Light Level 1 (3000 Lms, 27W)<br>**2** = Light Level 2 (4000 Lms, 39W)<br>**3** = Light Level 3 (5000 Lms, 47W)<br>**4** = Light Level 4 (6000 Lms, 58W)<br>**5** = Light Level 5 (7000 Lms, 70W) | **L30** = LED 3000K<br>**L35** = LED 3500K<br>**L40** = LED 4000K | **LD2** = LED 2.0 | **UNV** = Universal (120V-277V)<br>**347** = 347V (2) (9) |

| Size | Ceiling Type | Driver Type | Integral Sensor (Optional) | Emergency (Optional) | Options |
|---|---|---|---|---|---|
| **24** = 2' x 4' | **T1** = 1" T-Bar, Slot Grid, and 9/16" Tegular (3)<br>**T9** = 9/16" T-Bar (Flush) | **STD** = Standard 0-10V (10%-100%)<br>**HCD** = 0-10V (1%-100%) (6)<br>**STP** = Step Dimming (Bi-Level, 40%) (5) (7)<br>**5LT** = Fifth Light DALI (10%-100%) (4)<br>**5LTHD** = Fifth Light DALI (1%-100%) (4) (8)<br>**SR** = Sensor Ready (5%-100%) | **SV** = Integrated Occupancy/Daylight Sensor for Local Control (10)<br>**SW** = WaveLinx Wireless Integral Sensor (11)<br>**LWI** = Lumawatt Pro Wireless Integral Sensor (12) | **EL14W** = 14-watt 120V-277V Integral EM Battery Pack (13)<br>**GTD2** = Bodine Generator Transfer Device (14) | **AR** = Air Return<br>**CP** = Chicago Plenum (15)<br>**W6** = 6' Whip Flex<br>**W12** = 12' Whip Flex |

See page 3 for technical notes

## PHOTOMETRICS

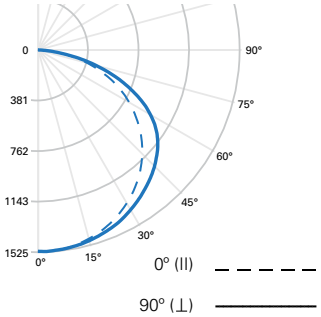


**FILE NAME: BRG-WS-3L35-LD2-UNV-24-STD.IES**

**LAMP:** (LD2) LED 3500K

**LUMENS:** 5175 Lm

**WATTS:** 47.2 W

**EFFICACY:** 110 Lm/W

**TEST NO.:** P189656

**SC:** (II) 1.31, (⊥) 1.37

**ZONAL LUMENS SUMMARY**

| Zone | Lumens | % Fixture |
|---|---|---|
| 0°-30° | 1215 | 23.5 |
| 0°-40° | 2035 | 39.3 |
| 0°-60° | 3835 | 74.1 |
| 0°-90° | 5175 | 100 |

**LUMINANCE DATA (CD/M²)**

| Vertical Angle | 0° | 45° | 90° |
|---|---|---|---|
| 45° | 2415 | 2528 | 2698 |
| 55° | 2435 | 2663 | 2932 |
| 65° | 2434 | 2775 | 3024 |
| 75° | 2315 | 2742 | 2713 |
| 85° | 1682 | 1594 | 1446 |

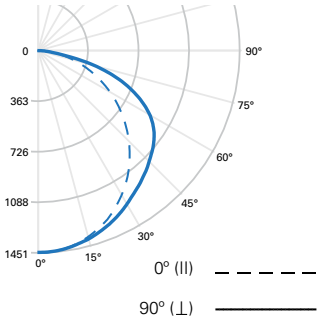


**FILE NAME: BRG-WG-3L35-LD2-UNV-24-STD.IES**

**LAMP:** (LD2) LED 3500K

**LUMENS:** 4669 Lm

**WATTS:** 47.2 W

**EFFICACY:** 99 Lm/W

**TEST NO.:** P189671

**SC:** (II) 1.24, (⊥) 1.32

**ZONAL LUMENS SUMMARY**

| Zone | Lumens | % Fixture |
|---|---|---|
| 0°-30° | 1129 | 24.2 |
| 0°-40° | 1863 | 39.9 |
| 0°-60° | 3446 | 73.8 |
| 0°-90° | 4669 | 100 |

**LUMINANCE DATA (CD/M²)**

| Vertical Angle | 0° | 45° | 90° |
|---|---|---|---|
| 45° | 2015 | 2230 | 2452 |
| 55° | 1915 | 2368 | 2731 |
| 65° | 1789 | 2599 | 2921 |
| 75° | 1630 | 2703 | 2604 |
| 85° | 1387 | 1446 | 1299 |

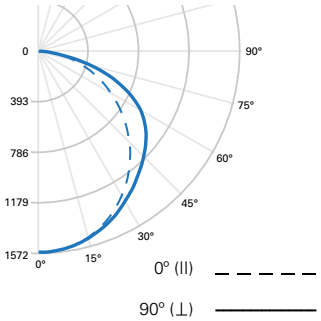


**FILE NAME: BRG-WN-3L35-LD2-UNV-24-STD.IES**

**LAMP:** (LD2) LED 3500K

**LUMENS:** 4829 Lm

**WATTS:** 47.2 W

**EFFICACY:** 102 Lm/W

**TEST NO.:** P189701

**SC:** (II) 1.29, (⊥) 1.29

**ZONAL LUMENS SUMMARY**

| Zone | Lumens | % Fixture |
|---|---|---|
| 0°-30° | 1214 | 25.1 |
| 0°-40° | 1994 | 41.3 |
| 0°-60° | 3629 | 75.1 |
| 0°-90° | 4829 | 100 |

**LUMINANCE DATA (CD/M²)**

| Vertical Angle | 0° | 45° | 90° |
|---|---|---|---|
| 45° | 2168 | 2324 | 2510 |
| 55° | 2049 | 2408 | 2708 |
| 65° | 1929 | 2556 | 2824 |
| 75° | 1739 | 2554 | 2425 |
| 85° | 1476 | 1416 | 1209 |

Note: Round Perf (WD) photometric performance is similar to Rectangular Perf (WG). Reference IES-format photometry online for more detail.

**ALB-01**

Revision Date:

## LUMEN MAINTENANCE

| Ambient Temperature | TM-21 Lumen Maintenance (100,000 hours) | Theoretical L70 (Hours) |
|---|---|---|
| 25°C | >75% | 125,000 |

## INLAY OPTIONS

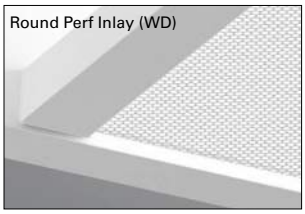


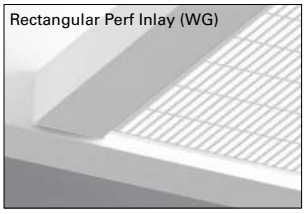


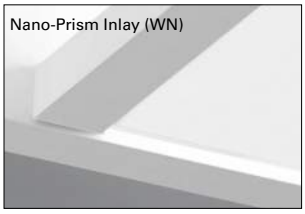


## ENERGY AND PERFORMANCE DATA

**2x4 – Bridge Light Level Outputs and Distributions (3500K)**

| Series | Light Level | Delivered Lumens | Wattage | Efficacy (LPW) |
|---|---|---|---|---|
| BRG-WS | 1 | 3145 | 27.1 | 116 |
| | 2 | 4148 | 38.5 | 108 |
| | 3 | 5175 | 47.2 | 110 |
| | 4 | 6160 | 58.5 | 105 |
| | 5 | 7164 | 70.2 | 102 |
| BRG-WD | 1 | 2840 | 27.1 | 105 |
| | 2 | 3746 | 38.5 | 97 |
| | 3 | 4670 | 47.2 | 99 |
| | 4 | 5559 | 58.5 | 95 |
| | 5 | 6469 | 70.2 | 92 |
| BRG-WG | 1 | 2838 | 27.1 | 105 |
| | 2 | 3743 | 38.5 | 97 |
| | 3 | 4669 | 47.2 | 99 |
| | 4 | 5559 | 58.5 | 95 |
| | 5 | 6465 | 70.2 | 92 |
| BRG-WN | 1 | 2935 | 27.1 | 108 |
| | 2 | 3871 | 38.5 | 100 |
| | 3 | 4829 | 47.2 | 102 |
| | 4 | 5749 | 58.5 | 98 |
| | 5 | 6686 | 70.2 | 95 |

| Stock | Catalog Number | Product Description | Delivered Lumens | Wattage | Efficacy (LPW) |
|---|---|---|---|---|---|
| Stock | BRG-WS-40L35-LD2-UNV-24-T1-STD | 2x4 Bridge, 4000 lm (LL2), 3500K, 0-10V | 4148 | 38.5 | 108 |
| | BRG-WS-40L40-LD2-UNV-24-T1-STD | 2x4 Bridge, 4000 lm (LL2), 4000K, 0-10V | 4235 | 38.5 | 110 |
| | BRG-WS-50L35-LD2-UNV-24-T1-STD | 2x4 Bridge, 5000 lm (LL3), 3500K, 0-10V | 5175 | 47.2 | 110 |
| | BRG-WS-50L40-LD2-UNV-24-T1-STD | 2x4 Bridge, 5000 lm (LL3), 4000K, 0-10V | 5283 | 47.2 | 112 |

## TECHNICAL NOTES

1. Dimming wires come standard in all LED fixtures but can be capped in the field for standard switched operation.
2. Integral 347V electronic driver with STD 0-10V option only. Factory supplied remote transformer for all other driver/dimming options.
3. "T1" ceiling type is compatible with Metalux DF Series Drywall Frame Kits and Metalux Universal Surface Mount Kits, ordered separately from Metalux. For 2x2 drywall frame kit, order part **#DF-24-W**. For 2x2 surface mount kit, order part **#SK-24-WS**. Refer to the surface mount kit specification sheet for more information.
4. Must be used in conjunction with a DALI control system. For a complete listing of Fifth Light Technology products and other solutions from Cooper Controls, visit www.eaton.com/lightingsystems.
5. 2x4: STP driver not available in Light Levels 1.
6. 2x4: Two HCD drivers required for Light Levels 4 and 5.
7. 2x4: Two STP drivers required for Light Level 5.
8. 2x4: Two 5LTHD drivers required for Light Levels 4 and 5.
9. 2x4: Two 347V 0-10V drivers required for Light Level 5.
10. SV sensor works only with 0-10V drivers and is factory prewired to the driver for stand-alone control. Order **#ISHH-01** for Programming Remote and **#ISHH-02** for Personal Control Remote.
11. SW sensor works only with STD and HCD 0-10V drivers. Designed for use with the WaveLinx Wireless Connected Lighting system. For complete WaveLinx wireless solutions, visit www.eaton.com/wavelinx.
12. LWI sensor requires the use of the SR driver. Must be used in conjunction with a LumaWatt Pro control system. For complete LumaWatt Pro wireless solutions, visit www.eaton.com/lumawattpro.
13. Integral emergency battery pack is 14W maximum, 90 minute output. A test switch/indicator button can be tested safely from the ground using a laser pointer, while the patented EZ Key prevents accidental discharge of the battery during construction. For approximate delivered lumens multiply the lumens per watt of the desired fixture by the wattage of the emergency battery pack (100 lm/W x 14=1400 lumens). Emergency battery pack not available with two driver configurations.
14. Used to transfer fixture to secondary power source for life-safety operation. When used with a dimming fixture, two devices are required to ensure control is disabled while operating under emergency power. Product height with transfer device is 5" (126mm).
15. Chicago plenum not available with GTD.

# ALB-01

Revision Date:

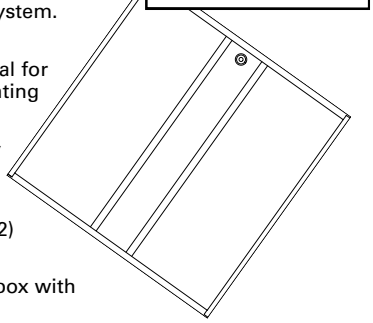

## INTEGRATED SENSOR

The Bridge with Integrated Sensor technology provides automatic energy savings without sacrificing performance. Traditionally, these types of energy savings required coordination between the luminaire and a lighting control system. The Bridge delivers superior lighting with integrated PIR occupancy and daylighting controls.

Capture the benefits of traditional lighting controls, without complicated coverage planning or special wiring. Ideal for new construction or retrofit, the Bridge delivers automatic ON to an energy saving light level, while ensuring lighting is turned OFF when the space is unoccupied.

The integral daylight sensor reduces the need for special daylight zone planning. The luminaire will automatically adjust the light level based on reflected light beneath the sensor in a closed loop method.

Occupied daylight light levels and unoccupied light levels can be adjusted using the integrated sensor programming remote (Catalog Number: ISHH-01). The integrated sensor personal remote (Catalog Number: ISHH-02) provides code compliant manual raise, lower, ON, OFF control.

The Bridge with Integrated Sensor is easy to install with no special wiring and ensures energy savings out-of-the-box with default control settings.

**How it works:**

- As the user enters the space controlled by the integral sensor, the lighting turns ON to the daylight level (default 500 lux).
- Lighting will remain at the daylight level until the space is unoccupied. This will start the occupancy timeout period (default 20 minutes).
- If the space remains unoccupied for half of the timeout period, the lighting will automatically reduce to the Energy Saver light level. This adjustable light level is typically half of the occupied daylight level.
- At the end of the timeout period the lighting will go to the unoccupied light level. This adjustable light level uses the OFF default setting.

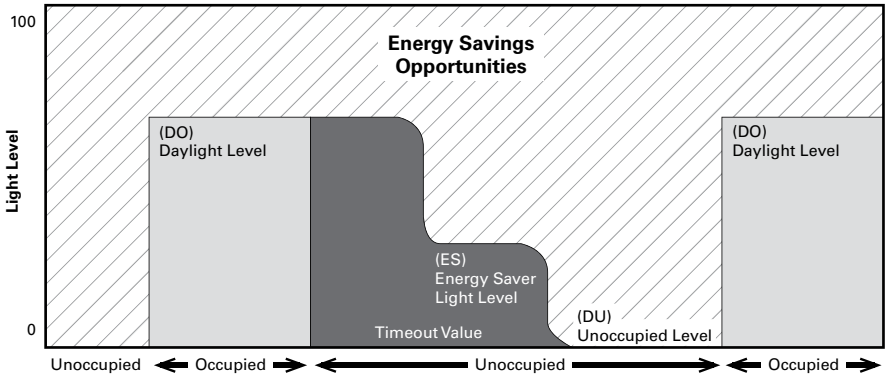


**Target light level default: 500 lux at 8 ft.**

**Coverage**

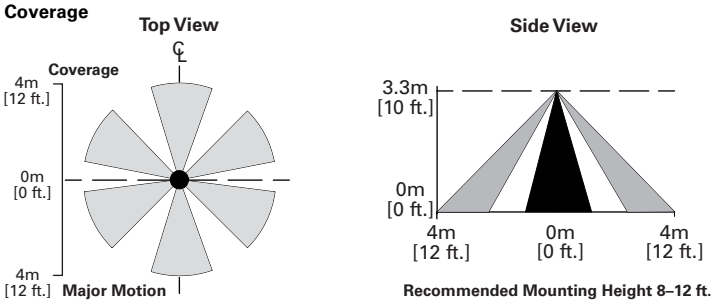


**Recommended Mounting Height 8–12 ft.**

**Optional Remote Controls**

**ISHH-01 Programming Remote**

**ISHH-02 Personal Control Remote**

Eaton
18001 E. Colfax Avenue
Aurora, CO 80011
P: 303-393-1522
www.eaton.com/lighting

Specifications and dimensions subject to change without notice.

## LUMAWATT PRO SYSTEM

**ALB-01**

Revision Date:

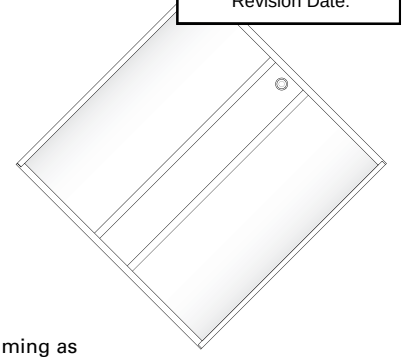

LumaWatt Pro with Enlighted is an integrated system of luminaires, digital sensors, and application-based software for any size project. The strengths of LumaWatt Pro with Enlighted are based on the independent, secure operation of individual sensors in every lighting fixture, combined with wireless communication to the powerful Energy Manager. The system aggregates input from the project to provide visibility to entire aspects of environmental data from the project, putting the input into easy-to-read dashboards of analytic detail. The dashboards enable you to take additional action with the system to improve energy savings, master the use of the space, interact with heating, ventilation, and air-conditioning (HVAC) systems, and report on system modes to reduce maintenance. By collecting granular, real-time data from our state-of-the-art integrated sensors to provide advanced, smart building solutions, you are in control.

### How it works:

- Luminaires are factory wired to sensors, which provide control based on digital occupancy and daylight dimming as independent, fault-proof, resilient networks of powerful end-points.
- Sensors communicate to each other, and gateways using easy wireless installation with secure set up.
- Gateways communicate using industry-standard wired technology to the Energy Manager, for powerful, familiar dashboards of useful information tailored for easy use on a connected computer.
- Energy Managers connect to cloud-based applications, maximizing the dense, data-rich sensing within the footprint of the luminaire for management of the building environment.

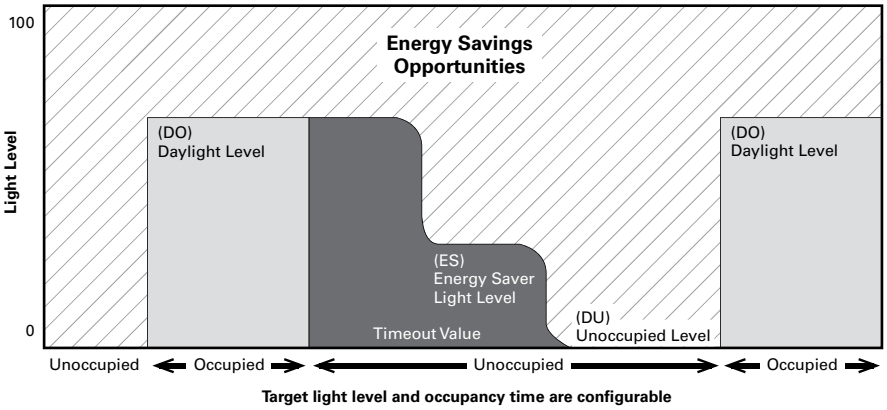


**Target light level and occupancy time are configurable**

**Energy Manager Software**

**Energy Dashboard**

**Space Analysis Application**

**AIRE Integration Application**

### Coverage, LWI Option

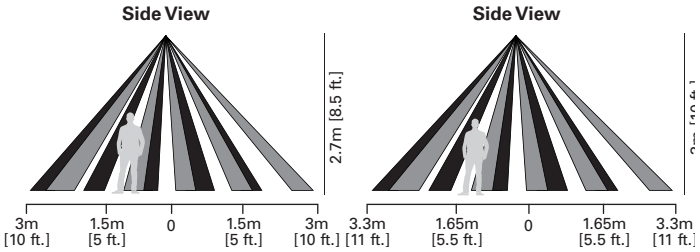


### System Configurations

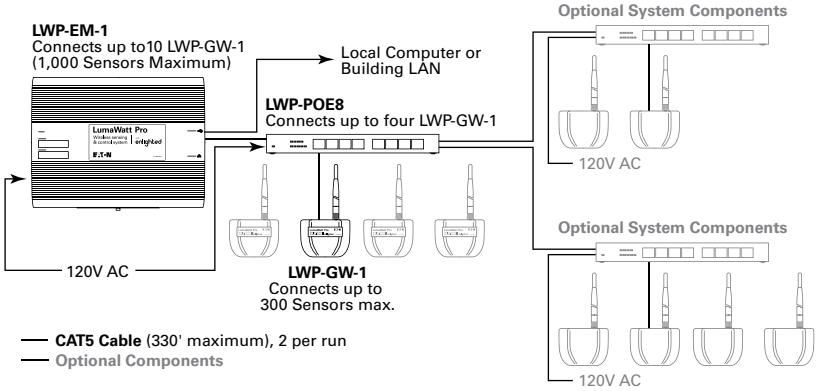


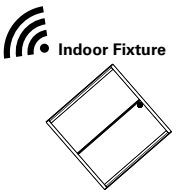

**Indoor Fixture**

Example No.:
DRI-WS-3L35-UNV-22-T1-SR-LWI

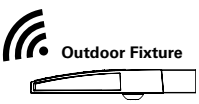

**Outdoor Fixture**

Example No.:
GLEON-AE-04-LED-E1-T3-GM-LWR-LN

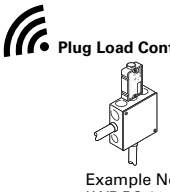

**Plug Load Controller**

Example No.:
LWP-PC-01-20

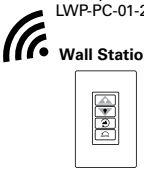

**Wall Station**

Example No.:
LWP-WS-2-00

## DESCRIPTION

The Bridge™ LED recessed offers a traditional yet modern design with the latest in solid-state lighting technology. High performing WaveStream™ optics allow for maximum energy savings and optimal illumination in a ultra-minimalistic shallow recessed fixture. Two WaveStream optic options are available; a fully uniform pattern and a square pattern that provides a unique translucent appearance without sacrificing performance. Additional shielding options are also available including rectangular perf, round perf, and nano-prism inlays. Available in 2x2, 2x4, 1x4 sizes along with several popular metric sizes, the Bridge is highly configurable with well-thought-out options and a number of architectural styles for application versatility.

| | | Type |
|---|---|---|
| Catalog # | BRG-WS-40L35-LD2-UNV-24-T1-STD | ALB-02 |
| Project | Aloft | Revision Date: |
| Comments | | Date |
| Prepared by | Kathleen Kenny | |

## SPECIFICATION FEATURES

**Construction**
Shallow 3-7/8" deep housing is a 22 gauge steel reflector with injection molded high-reflectance polycarbonate end plates securely attached with integral snaps and screws for strength, rigidity and the elimination of gaps. WaveStream light engine with extruded aluminum heatsinks span across the bottom of the luminaire. Drivers can be accessed via plenum. Large access plate for supply connection. Fixture weight: 20.0 lbs.

**Optics**
Optical grade acrylic embedded with patented WaveStream Accu-Aim™ optics for optimal distribution, excellent uniformity, and high performance. Center light engine becomes virtually clear in the off-state.

**Shielding**
Perf pattern and nano-prismatic inlays are available as additional aesthetic options. Perf inlay available in round or rectangular pattern. Nano-prism inlay is a high light transmission material offering additional brightness mitigation.

**Finish**
Fixture housing and back reflector are high reflectance white using electrostatically applied polyester powder coat paint for durability and luminous uniformity.

**Electrical**
Long-life LED system coupled with electrical driver to deliver optimal performance. Projected life is 100,000 at 75% lumen output. LEDs are available in 3000K, 3500K or 4000K with a typical CRI ≤ 85.

Standard drivers are 0-10 volt continuous dimming that work with any 0-10V control/dimmer. Or, specify Digital Addressable Lighting Interface (DALI) drivers; for use with Fifth Light controls. See ordering information for details.

**Mounting**
Universal flange design works with most lay-in ceiling types. Integral pry-out tabs secure luminaire to ceiling grid from above. Fixture offers tie-in locations for tie-wire on all corners. Consult local code for appropriate tie-wire recommendations. See Technical Notes section for drywall frame kit and surface mount kit options.

**Compliance**
Components are UL recognized and luminaires are cULus listed for 25°C ambient environments, damp location listed, and RoHS compliant. DesignLights Consortium™ Qualified and classified for DLC Standard, refer to www.designlights.org for details.

**Warranty**
Five-year warranty.

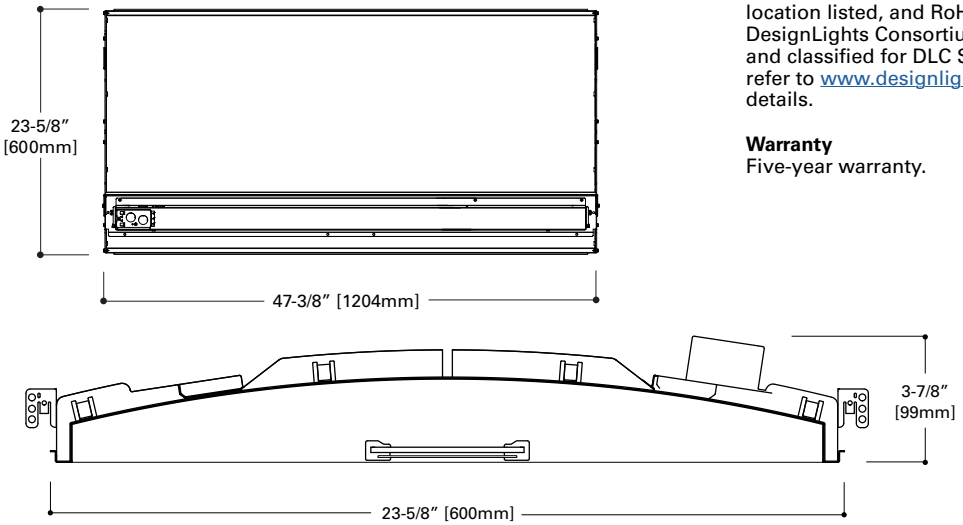

# BRIDGE - BRG

Fully Uniform

**WaveStream™ LED**

**2' x 4' Recessed**
3-7/8" Depth

CERTIFICATION DATA
cULus - 1598
Damp Location Listed
IC Rated
LM79/LM80 Compliant
ROHS Compliant
DesignLights Consortium™ Qualified

LumaWatt Pro
Wireless sensing & control system | with enlighted

powered by fifthlight technology

## ORDERING INFORMATION

**Sample Number: BRG-WS-3L35-LD2-UNV-24-T1-STD-SW-EL14W-AR**

| Series (1) | Optics/Shielding | Light Level (2x4 Nominal delivered lumens) | Color Temperature | LED Version | Input Voltage |
|---|---|---|---|---|---|
| **BRG** = Bridge Recessed | **WS** = WaveStream Fully Uniform<br>**WD** = WaveStream with Round Perf Inlay<br>**WG** = WaveStream with Rectangular Perf Inlay<br>**WN** = WaveStream with Nano-Prism Perf Inlay | **1** = Light Level 1 (3000 Lms, 27W)<br>**2** = Light Level 2 (4000 Lms, 39W)<br>**3** = Light Level 3 (5000 Lms, 47W)<br>**4** = Light Level 4 (6000 Lms, 58W)<br>**5** = Light Level 5 (7000 Lms, 70W) | **L30** = LED 3000K<br>**L35** = LED 3500K<br>**L40** = LED 4000K | **LD2** = LED 2.0 | **UNV** = Universal (120V-277V)<br>**347** = 347V (2) (9) |

| Size | Ceiling Type | Driver Type | Integral Sensor (Optional) | Emergency (Optional) | Options |
|---|---|---|---|---|---|
| **24** = 2' x 4' | **T1** = 1" T-Bar, Slot Grid, and 9/16" Tegular (3)<br>**T9** = 9/16" T-Bar (Flush) | **STD** = Standard 0-10V (10%-100%)<br>**HCD** = 0-10V (1%-100%) (6)<br>**STP** = Step Dimming (Bi-Level, 40%) (5) (7)<br>**5LT** = Fifth Light DALI (10%-100%) (4)<br>**5LTHD** = Fifth Light DALI (1%-100%) (4) (8)<br>**SR** = Sensor Ready (5%-100%) | **SV** = Integrated Occupancy/Daylight Sensor for Local Control (10)<br>**SW** = WaveLinx Wireless Integral Sensor (11)<br>**LWI** = Lumawatt Pro Wireless Integral Sensor (12) | **EL14W** = 14-watt 120V-277V Integral EM Battery Pack (13)<br>**GTD2** = Bodine Generator Transfer Device (14) | **AR** = Air Return<br>**CP** = Chicago Plenum (15)<br>**W6** = 6' Whip Flex<br>**W12** = 12' Whip Flex |

See page 3 for technical notes

## PHOTOMETRICS

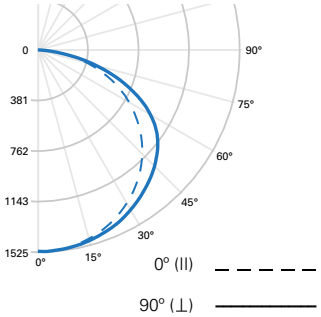


**FILE NAME: BRG-WS-3L35-LD2-UNV-24-STD.IES**

**LAMP:** (LD2) LED 3500K

**LUMENS:** 5175 Lm

**WATTS:** 47.2 W

**EFFICACY:** 110 Lm/W

**TEST NO.:** P189656

**SC:** (II) 1.31, (⊥) 1.37

**ZONAL LUMENS SUMMARY**

| Zone | Lumens | % Fixture |
|---|---|---|
| 0°-30° | 1215 | 23.5 |
| 0°-40° | 2035 | 39.3 |
| 0°-60° | 3835 | 74.1 |
| 0°-90° | 5175 | 100 |

**LUMINANCE D**

| Vertical Angle | 0° | 45° | 90° |
|---|---|---|---|
| 45° | 2415 | 2528 | 2698 |
| 55° | 2435 | 2663 | 2932 |
| 65° | 2434 | 2775 | 3024 |
| 75° | 2315 | 2742 | 2713 |
| 85° | 1682 | 1594 | 1446 |

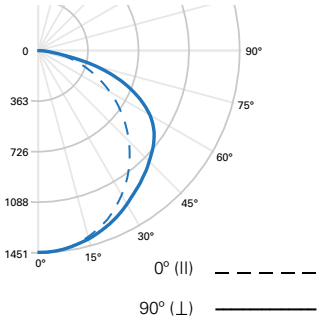


**FILE NAME: BRG-WG-3L35-LD2-UNV-24-STD.IES**

**LAMP:** (LD2) LED 3500K

**LUMENS:** 4669 Lm

**WATTS:** 47.2 W

**EFFICACY:** 99 Lm/W

**TEST NO.:** P189671

**SC:** (II) 1.24, (⊥) 1.32

**ZONAL LUMENS SUMMARY**

| Zone | Lumens | % Fixture |
|---|---|---|
| 0°-30° | 1129 | 24.2 |
| 0°-40° | 1863 | 39.9 |
| 0°-60° | 3446 | 73.8 |
| 0°-90° | 4669 | 100 |

**LUMINANCE DATA (CD/M²)**

| Vertical Angle | 0° | 45° | 90° |
|---|---|---|---|
| 45° | 2015 | 2230 | 2452 |
| 55° | 1915 | 2368 | 2731 |
| 65° | 1789 | 2599 | 2921 |
| 75° | 1630 | 2703 | 2604 |
| 85° | 1387 | 1446 | 1299 |

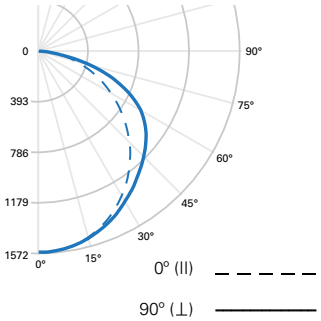


**FILE NAME: BRG-WN-3L35-LD2-UNV-24-STD.IES**

**LAMP:** (LD2) LED 3500K

**LUMENS:** 4829 Lm

**WATTS:** 47.2 W

**EFFICACY:** 102 Lm/W

**TEST NO.:** P189701

**SC:** (II) 1.29, (⊥) 1.29

**ZONAL LUMENS SUMMARY**

| Zone | Lumens | % Fixture |
|---|---|---|
| 0°-30° | 1214 | 25.1 |
| 0°-40° | 1994 | 41.3 |
| 0°-60° | 3629 | 75.1 |
| 0°-90° | 4829 | 100 |

**LUMINANCE DATA (CD/M²)**

| Vertical Angle | 0° | 45° | 90° |
|---|---|---|---|
| 45° | 2168 | 2324 | 2510 |
| 55° | 2049 | 2408 | 2708 |
| 65° | 1929 | 2556 | 2824 |
| 75° | 1739 | 2554 | 2425 |
| 85° | 1476 | 1416 | 1209 |

Note: Round Perf (WD) photometric performance is similar to Rectangular Perf (WG). Reference IES-format photometry online for more detail.

**ALB-02**

Revision Date:

## LUMEN MAINTENANCE

| Ambient Temperature | TM-21 Lumen Maintenance (100,000 hours) | Theoretical L70 (Hours) |
|---|---|---|
| 25°C | >75% | 125,000 |

## INLAY OPTIONS

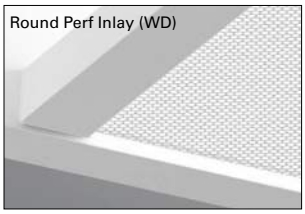


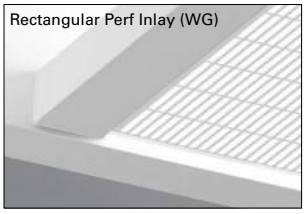


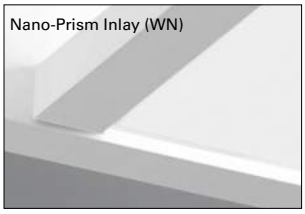


## ENERGY AND PERFORMANCE DATA

**2x4 – Bridge Light Level Outputs and Distributions (3500K)**

| Series | Light Level | Delivered Lumens | Wattage | Efficacy (LPW) |
|---|---|---|---|---|
| BRG-WS | 1 | 3145 | 27.1 | 116 |
| | 2 | 4148 | 38.5 | 108 |
| | 3 | 5175 | 47.2 | 110 |
| | 4 | 6160 | 58.5 | 105 |
| | 5 | 7164 | 70.2 | 102 |
| BRG-WD | 1 | 2840 | 27.1 | 105 |
| | 2 | 3746 | 38.5 | 97 |
| | 3 | 4670 | 47.2 | 99 |
| | 4 | 5559 | 58.5 | 95 |
| | 5 | 6469 | 70.2 | 92 |
| BRG-WG | 1 | 2838 | 27.1 | 105 |
| | 2 | 3743 | 38.5 | 97 |
| | 3 | 4669 | 47.2 | 99 |
| | 4 | 5559 | 58.5 | 95 |
| | 5 | 6465 | 70.2 | 92 |
| BRG-WN | 1 | 2935 | 27.1 | 108 |
| | 2 | 3871 | 38.5 | 100 |
| | 3 | 4829 | 47.2 | 102 |
| | 4 | 5749 | 58.5 | 98 |
| | 5 | 6686 | 70.2 | 95 |

| Stock | Catalog Number | Product Description | Delivered Lumens | Wattage | Efficacy (LPW) |
|---|---|---|---|---|---|
| Stock | BRG-WS-40L35-LD2-UNV-24-T1-STD | 2x4 Bridge, 4000 lm (LL2), 3500K, 0-10V | 4148 | 38.5 | 108 |
| | BRG-WS-40L40-LD2-UNV-24-T1-STD | 2x4 Bridge, 4000 lm (LL2), 4000K, 0-10V | 4235 | 38.5 | 110 |
| | BRG-WS-50L35-LD2-UNV-24-T1-STD | 2x4 Bridge, 5000 lm (LL3), 3500K, 0-10V | 5175 | 47.2 | 110 |
| | BRG-WS-50L40-LD2-UNV-24-T1-STD | 2x4 Bridge, 5000 lm (LL3), 4000K, 0-10V | 5283 | 47.2 | 112 |

## TECHNICAL NOTES

1. Dimming wires come standard in all LED fixtures but can be capped in the field for standard switched operation.
2. Integral 347V electronic driver with STD 0-10V option only. Factory supplied remote transformer for all other driver/dimming options.
3. "T1" ceiling type is compatible with Metalux DF Series Drywall Frame Kits and Metalux Universal Surface Mount Kits, ordered separately from Metalux. For 2x2 drywall frame kit, order part **#DF-24-W**. For 2x2 surface mount kit, order part **#SK-24-WS**. Refer to the surface mount kit specification sheet for more information.
4. Must be used in conjunction with a DALI control system. For a complete listing of Fifth Light Technology products and other solutions from Cooper Controls, visit www.eaton.com/lightingsystems.
5. 2x4: STP driver not available in Light Levels 1.
6. 2x4: Two HCD drivers required for Light Levels 4 and 5.
7. 2x4: Two STP drivers required for Light Level 5.
8. 2x4: Two 5LTHD drivers required for Light Levels 4 and 5.
9. 2x4: Two 347V 0-10V drivers required for Light Level 5.
10. SV sensor works only with 0-10V drivers and is factory prewired to the driver for stand-alone control. Order **#ISHH-01** for Programming Remote and **#ISHH-02** for Personal Control Remote.
11. SW sensor works only with STD and HCD 0-10V drivers. Designed for use with the WaveLinx Wireless Connected Lighting system. For complete WaveLinx wireless solutions, visit www.eaton.com/wavelinx.
12. LWI sensor requires the use of the SR driver. Must be used in conjunction with a LumaWatt Pro control system. For complete LumaWatt Pro wireless solutions, visit www.eaton.com/lumawattpro.
13. Integral emergency battery pack is 14W maximum, 90 minute output. A test switch/indicator button can be tested safely from the ground using a laser pointer, while the patented EZ Key prevents accidental discharge of the battery during construction. For approximate delivered lumens multiply the lumens per watt of the desired fixture by the wattage of the emergency battery pack (100 lm/W x 14=1400 lumens). Emergency battery pack not available with two driver configurations.
14. Used to transfer fixture to secondary power source for life-safety operation. When used with a dimming fixture, two devices are required to ensure control is disabled while operating under emergency power. Product height with transfer device is 5" (126mm).
15. Chicago plenum not available with GTD.

# ALB-02

Revision Date:

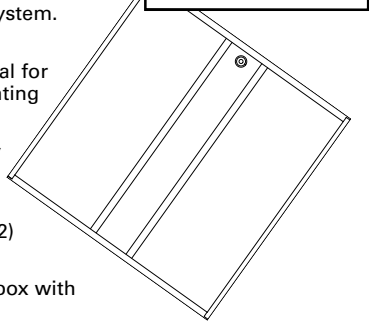

## INTEGRATED SENSOR

The Bridge with Integrated Sensor technology provides automatic energy savings without sacrificing performance. Traditionally, these types of energy savings required coordination between the luminaire and a lighting control system. The Bridge delivers superior lighting with integrated PIR occupancy and daylighting controls.

Capture the benefits of traditional lighting controls, without complicated coverage planning or special wiring. Ideal for new construction or retrofit, the Bridge delivers automatic ON to an energy saving light level, while ensuring lighting is turned OFF when the space is unoccupied.

The integral daylight sensor reduces the need for special daylight zone planning. The luminaire will automatically adjust the light level based on reflected light beneath the sensor in a closed loop method.

Occupied daylight light levels and unoccupied light levels can be adjusted using the integrated sensor programming remote (Catalog Number: ISHH-01). The integrated sensor personal remote (Catalog Number: ISHH-02) provides code compliant manual raise, lower, ON, OFF control.

The Bridge with Integrated Sensor is easy to install with no special wiring and ensures energy savings out-of-the-box with default control settings.

**How it works:**

- As the user enters the space controlled by the integral sensor, the lighting turns ON to the daylight level (default 500 lux).
- Lighting will remain at the daylight level until the space is unoccupied. This will start the occupancy timeout period (default 20 minutes).
- If the space remains unoccupied for half of the timeout period, the lighting will automatically reduce to the Energy Saver light level. This adjustable light level is typically half of the occupied daylight level.
- At the end of the timeout period the lighting will go to the unoccupied light level. This adjustable light level uses the OFF default setting.

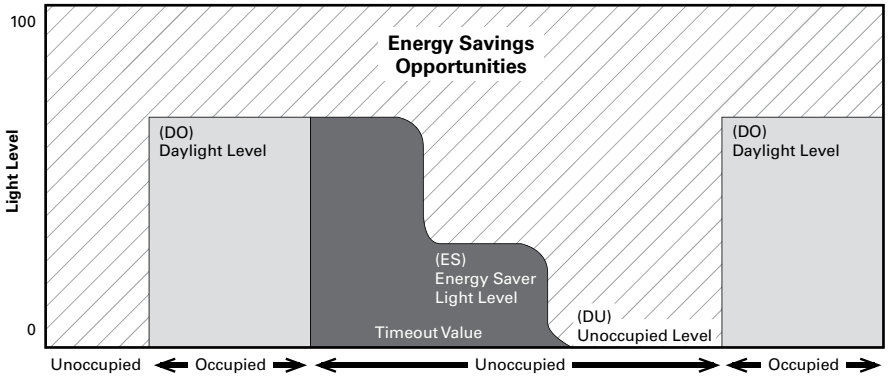


**Target light level default: 500 lux at 8 ft.**

**Coverage**

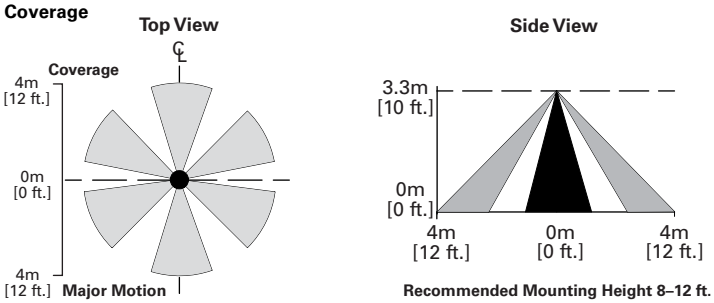


**Recommended Mounting Height 8–12 ft.**

**Optional Remote Controls**

**ISHH-01 Programming Remote**

**ISHH-02 Personal Control Remote**

Eaton
18001 E. Colfax Avenue
Aurora, CO 80011
P: 303-393-1522
www.eaton.com/lighting

Specifications and dimensions subject to change without notice.

## LUMAWATT PRO SYSTEM

**ALB-02**

Revision Date:

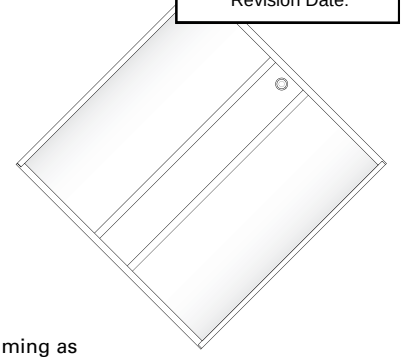

LumaWatt Pro with Enlighted is an integrated system of luminaires, digital sensors, and application-based software for any size project. The strengths of LumaWatt Pro with Enlighted are based on the independent, secure operation of individual sensors in every lighting fixture, combined with wireless communication to the powerful Energy Manager. The system aggregates input from the project to provide visibility to entire aspects of environmental data from the project, putting the input into easy-to-read dashboards of analytic detail. The dashboards enable you to take additional action with the system to improve energy savings, master the use of the space, interact with heating, ventilation, and air-conditioning (HVAC) systems, and report on system modes to reduce maintenance. By collecting granular, real-time data from our state-of-the-art integrated sensors to provide advanced, smart building solutions, you are in control.

### How it works:

- Luminaires are factory wired to sensors, which provide control based on digital occupancy and daylight dimming as independent, fault-proof, resilient networks of powerful end-points.
- Sensors communicate to each other, and gateways using easy wireless installation with secure set up.
- Gateways communicate using industry-standard wired technology to the Energy Manager, for powerful, familiar dashboards of useful information tailored for easy use on a connected computer.
- Energy Managers connect to cloud-based applications, maximizing the dense, data-rich sensing within the footprint of the luminaire for management of the building environment.

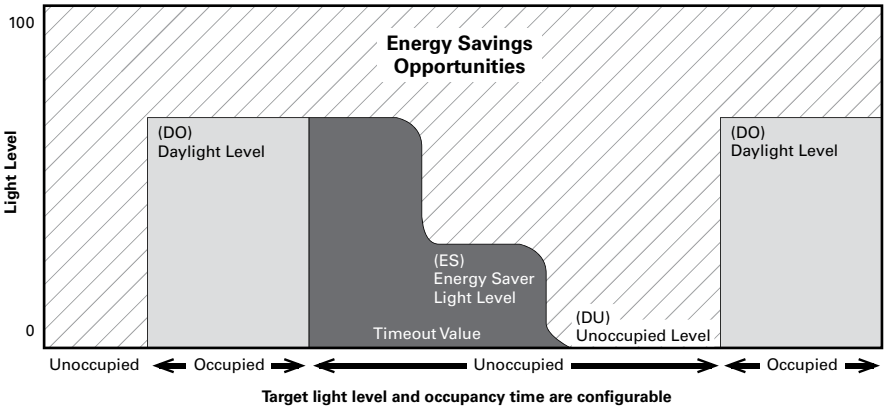


**Target light level and occupancy time are configurable**

**Energy Manager Software**

**Energy Dashboard**

**Space Analysis Application**

**AIRE Integration Application**

### Coverage, LWI Option

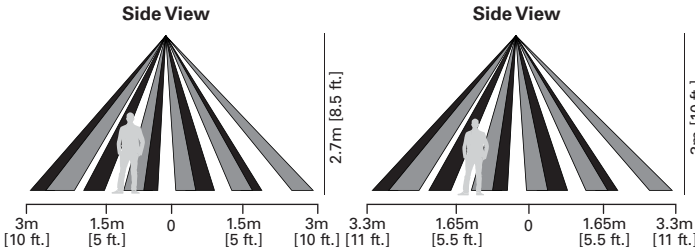


### System Configurations

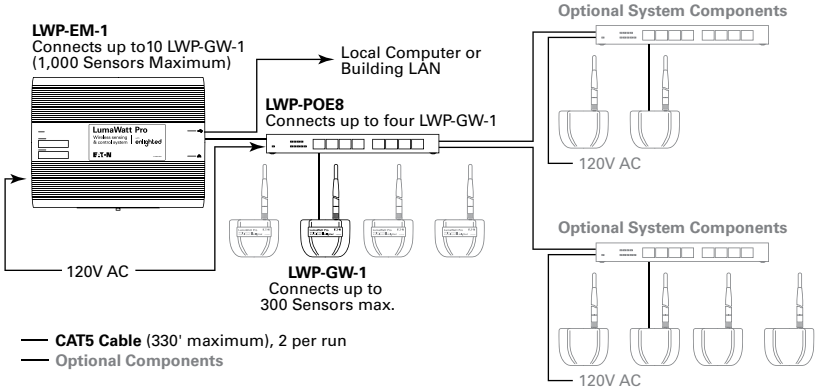


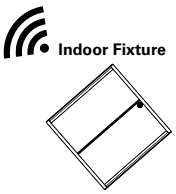

**Indoor Fixture**

Example No.:
DRI-WS-3L35-UNV-22-T1-SR-LWI

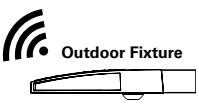

**Outdoor Fixture**

Example No.:
GLEON-AE-04-LED-E1-T3-GM-LWR-LN

**Plug Load Controller**

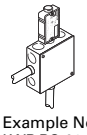

Example No.:
LWP-PC-01-20

**Wall Station**

Example No.:
LWP-WS-2-00

## Response to Request for Proposal

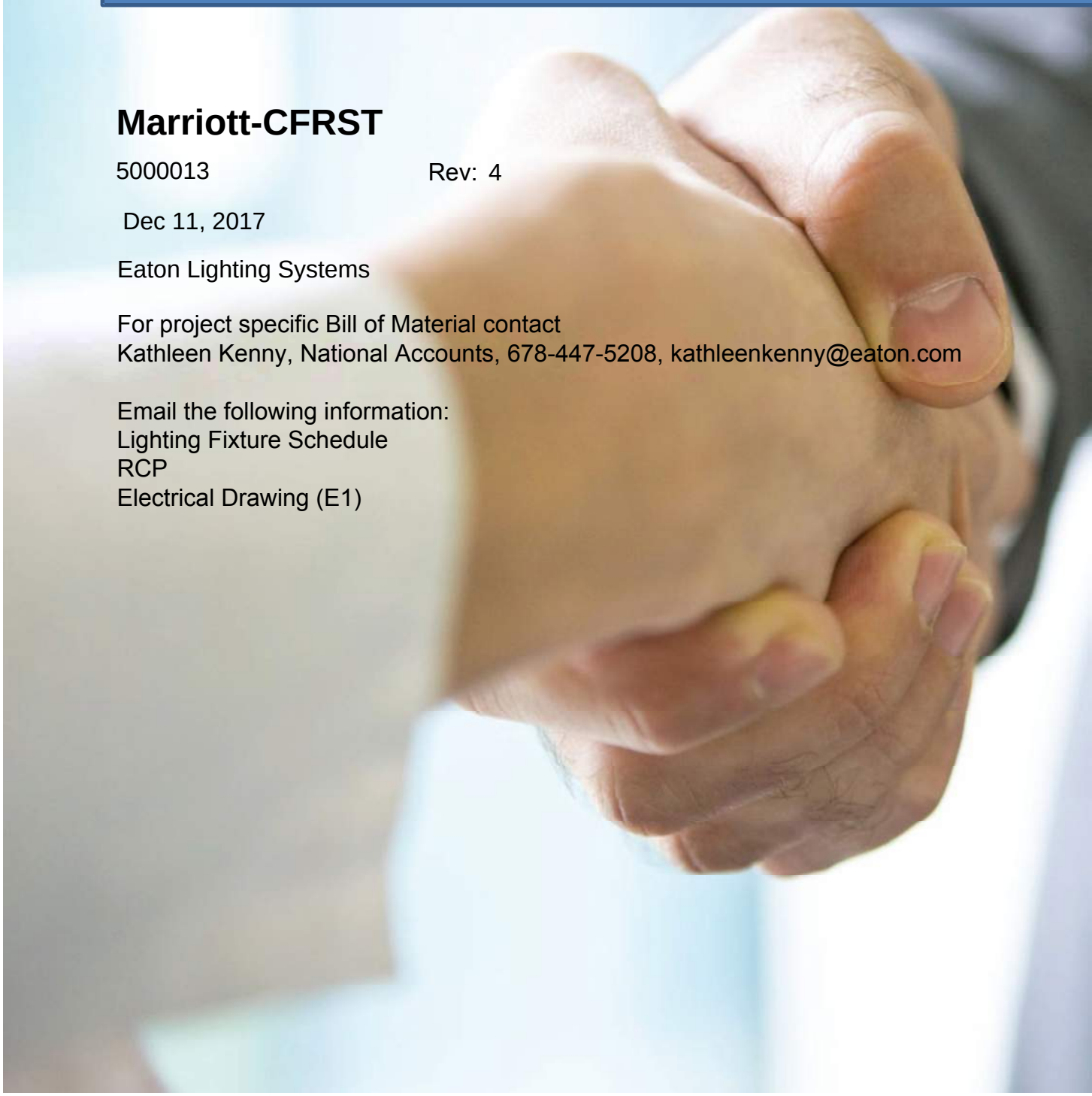

# Marriott-CFRST

5000013 Rev: 4

Dec 11, 2017

Eaton Lighting Systems

For project specific Bill of Material contact
Kathleen Kenny, National Accounts, 678-447-5208, kathleenkenny@eaton.com

Email the following information:
Lighting Fixture Schedule
RCP
Electrical Drawing (E1)

Cooper Lighting
by EATON

# Bill of Material

**C01**
Revision Date:

## Marriott-CFRST

| Quantity | Type Mark | Brand | Catalog #/ Line Comments |
|---|---|---|---|
| 1 | | Cooper Controls | LCCP<br>Communication Cable 500' spool-Plenum Rated Used for Digital Switch Networks Only |
| 1 | | iLumin | SC120-24-UN-3P-ML-20<br>24 Channel Source Controller 120V 20amp 3phase |
| 1 | | iLumin | TSC-30-SS-NA<br>3.5"Color Touchscreen, NA, Stainless Steel |
| 1 | | iLumin | CLS-6TSB-W-IR<br>6 Small buttons, White, IR |
| 1 | | Cooper Controls | ENGRV-6BTNS-W<br>6 Small Button White Requires Custom Text Order Form |
| | 1 days, | Certified Factory Startup<br>Scheduled Room Controller, Green Gate or Ilumin Commissioning trip and training by Eaton Lighting Systems Factory Representative | |
| | | CC-DWGSERVICES 1<br><75K Drawing Services, Systems less than $75K project price. | |
| | | Standard Warranty<br>Standard product warranty based on date of product shipment. See product documentation for standard warranty information. | |

# C01

Revision Date:

KEY PLAN

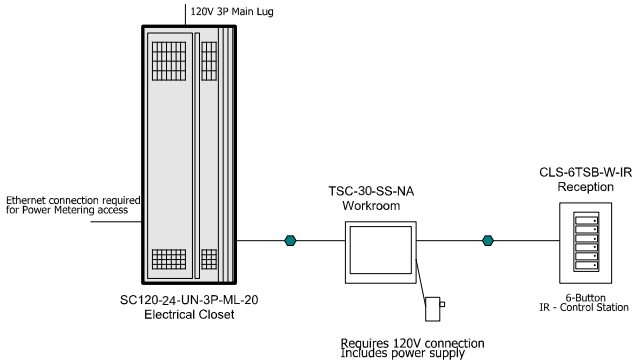


## Notes

| | |
|---|---|
| 1 | This one-line drawing is for concept only. Every wire is not shown. Wire according to the product installation / wiring instructions . |
| 2 | Refer to plans for locations,size and quantity. |
| 3 | Refer to all manufacturers installation instructions for correct wiring information |

## Cables

| | | |
|---|---|---|
| ⬣ | CAN | Use Eaton Lighting systems LCCNP non-plenum cable or LCCP plenum cable. |

| DATE | REV | DESCRIPTION | BY |
|---|---|---|---|

REVISION TABLE

THE INFORMATION ON THIS DRAWING IS THE PROPERTY OF EATON CORPORATION. IT IS DISCLOSED IN CONFIDENCE AND IS NOT TO BE REPRODUCED, USED, OR DISCLOSED EXCEPT FOR THE PURPOSE FOR WHICH FURNISHES.

Eaton Lighting Systems

TITLE:
Marriott-Courtyard

| | | | |
|---|---|---|---|
| DRAWN: | DATE: Jul 22, 2016 1 | PROJ: 5000013 | REV: 1 |
| CH'KD: | SCALE: NTS | DWG #: | |
| APPR: | SHEET: | | |
| | SIZE: A | | |

**C01**

Revision Date:

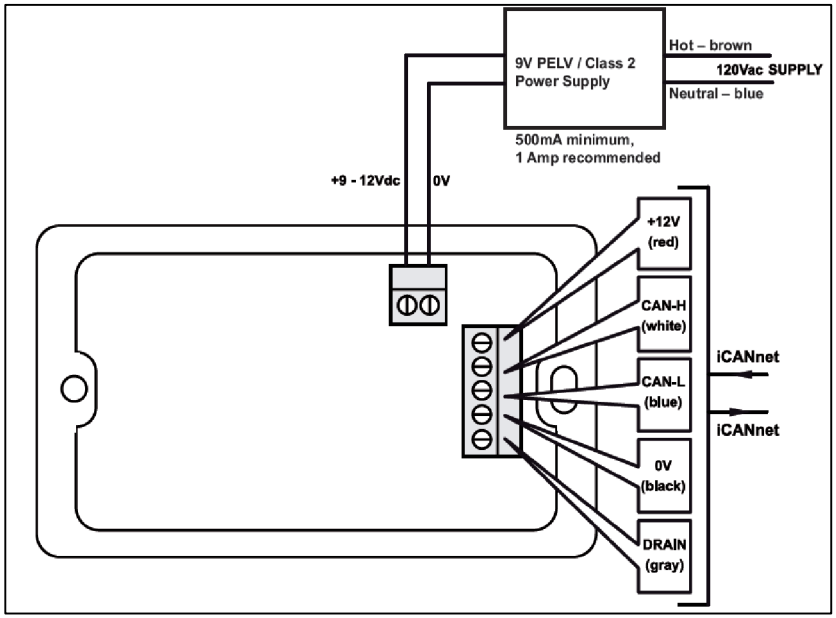


Title:TSC Wiring Detail
Application: iLumin TouchScreen

COOPER Controls
203 Cooper Circle
Peachtree City,
GA 30269. USA
Tel: +1-800-553-3879
Fax: +1-800-954-7016
Email: controls@cooperindustries.com

Date:
Project:

**C01**

Revision Date:

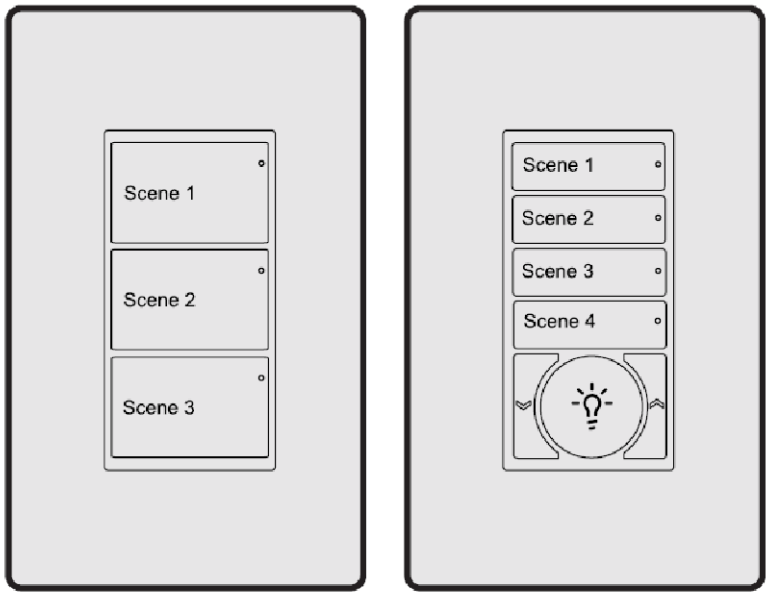


**Large Button Example**

**Small Button Example with Raise Lower**

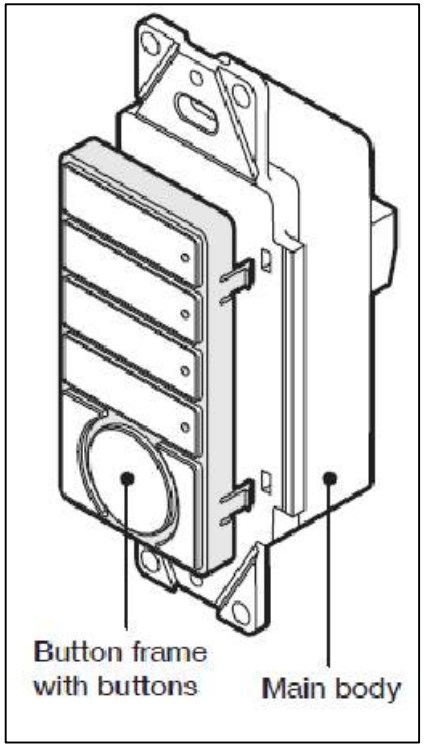


Title:Ineo Cover Detail
Application: iLumin Ineo Control Station

COOPER Controls
203 Cooper Circle
Peachtree City,
GA 30269. USA
Tel: +1-800-553-3879
Fax: +1-800-954-7016
Email: controls@cooperindustries.com

Date:
Project:

**C01**

Revision Date:

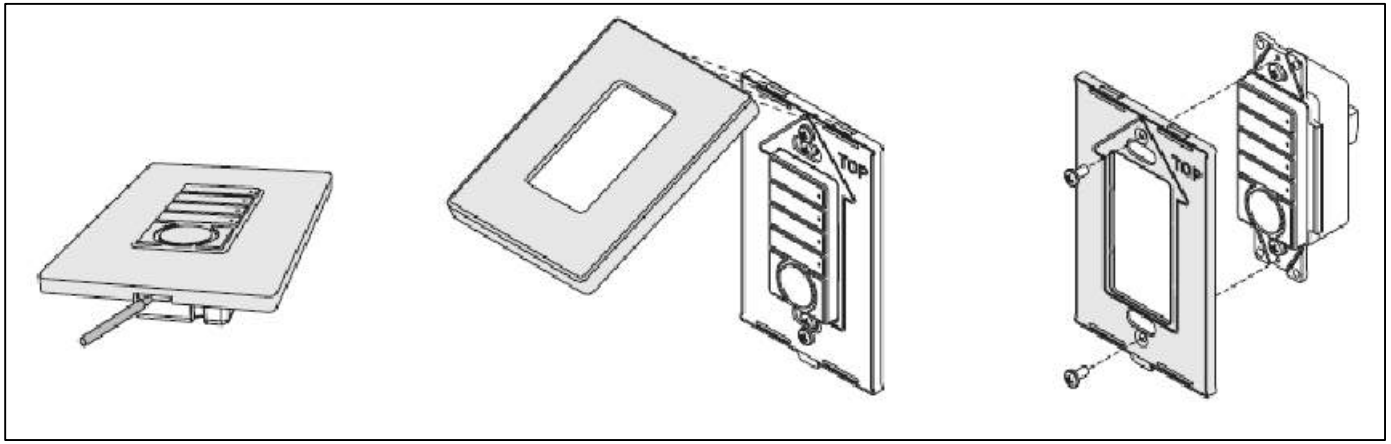


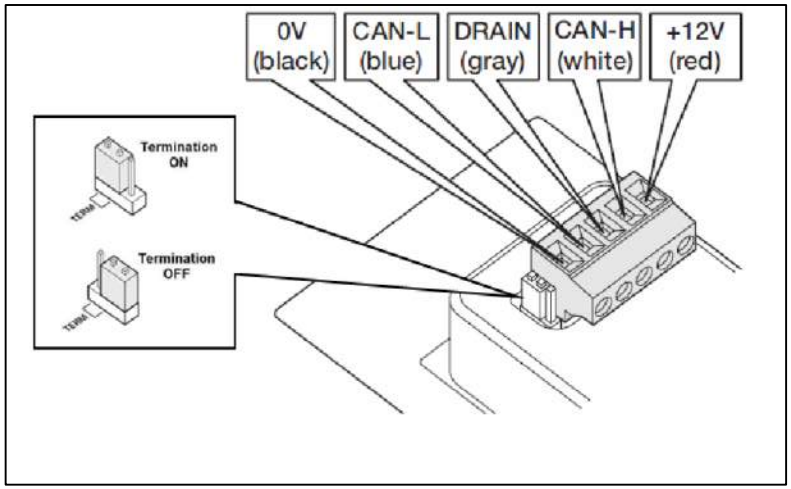


Title:Ineo Wiring Detail
Application: iLumin Ineo Control Station

COOPER Controls
203 Cooper Circle
Peachtree City,
GA 30269. USA
Tel: +1-800-553-3879
Fax: +1-800-954-7016
Email: controls@cooperindustries.com

Date:
Project:

## General information

ControlKeeper M lighting panels are compatible with Greengate Digital Switches (GDS). Greengate Digital Switches are networkable, intelligent, low-voltage switches. Greengate Digital Switches are proprietary to Cooper Controls. Digital switches from other manufacturers are not compatible with the system. GDS Stations are available in large button and small button configurations which offer 1 to 6 buttons per station.

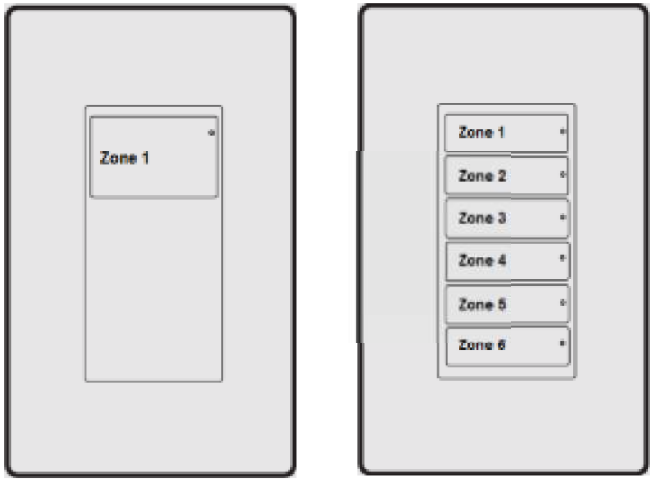


Each ControlKeeper M panel has a connection terminal block which allows one GDS switch network to connect directly to the motherboard. Each GDS switch network is capable of powering and supporting up to 32 GDS stations over a 1000 foot (300 meter) distance.

The GDS network is a daisy chain configuration with two distinct ends. The two end devices will be terminated using onboard termination jumpers. Prior to wiring, map out the proposed wiring route to ensure correct installation.

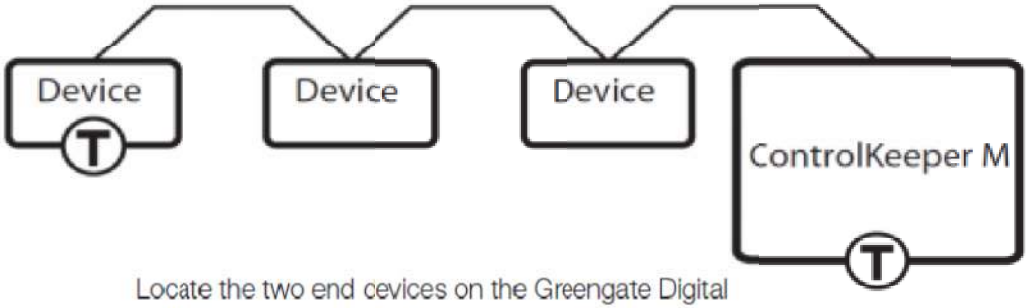


Locate the two end cevices on the Greengate Digital Switch network. These two devices should have their termination jumpers in the 'Terminated' position. The remaining devices on the GDS network should have their termination jumpers in the OFF position. Termination jumpers are located on the back of the GDS switch directly next to the GDS network terminal block. On the ControlKeeper M, the termination jumper is below the GDS network wiring terminal block.

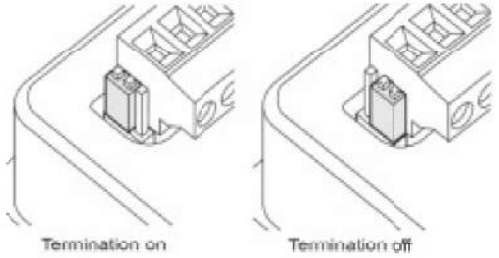


**Title: General/Network Detail**

**Product: Greengate Digital Switch**

Powering Business Worldwide

Eaton
1121 Highway 74 South
Peachtree City, GA 30269

**Date:**

**Project:**

The ControlKeeper M can be wired into the GDS daisy chain anywhere within the network. All GDS wiring should be done using Cooper LCCNP (non plenum), Cooper LCCP (plenum), Belden 1502R (non-plenum) or 1502P (plenum) cable. For best network performance, one of the suggested cables should be used. If the specified cable is not used and communications problems occur that require troubleshooting assistance, additional charges will apply.

All stations and the CKM terminal block follow the same wiring scheme:

- +24V = Red Wire
- CAN-H = White Wire
- Shield = Shield Wire
- CAN-L = Blue Wire
- GND/0V = Black Wire

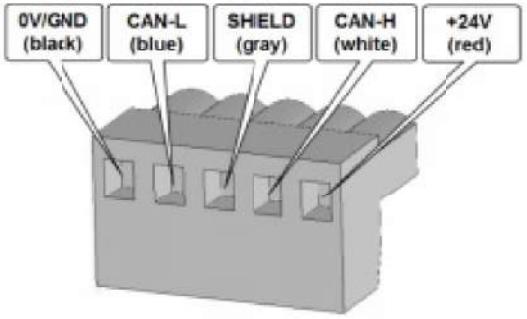


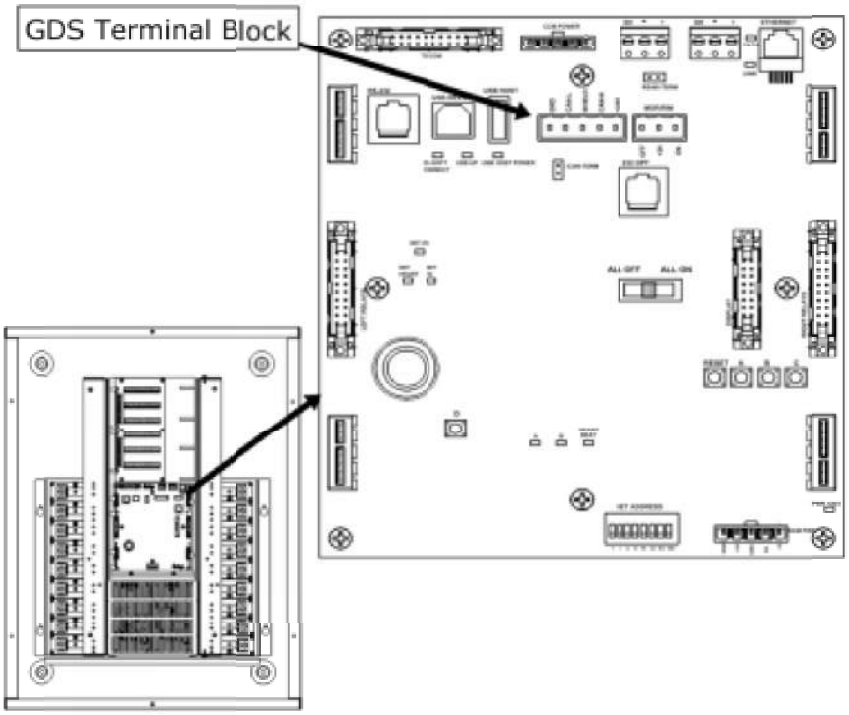


**Title: Network Wiring Detail**

**Product: Greengate Digital Switch**

Eaton
1121 Highway 74 South
Peachtree City, GA 30269

**Date:**

**Project:**

**C01**

Revision Date:

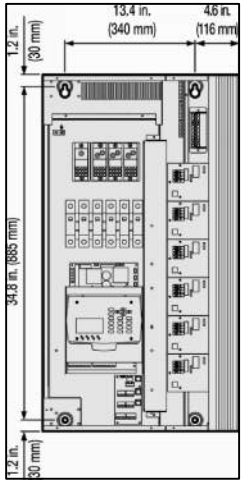


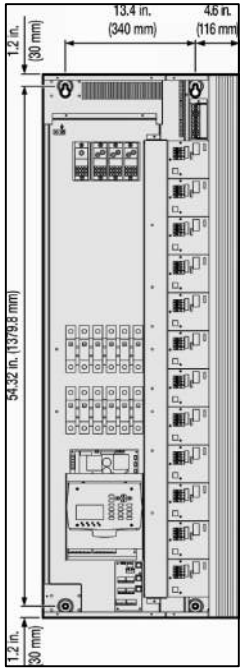


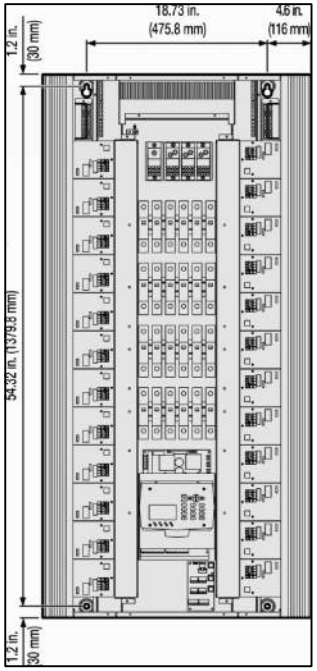


Title: Mounting holes
Application: iLumin Source Controller

COOPER Controls
203 Cooper Circle
Peachtree City,
GA 30269. USA
Tel: +1-800-553-3879
Fax: +1-800-954-7016
Email: controls@cooperindustries.com

Date:
Project:

**C01**

Revision Date:

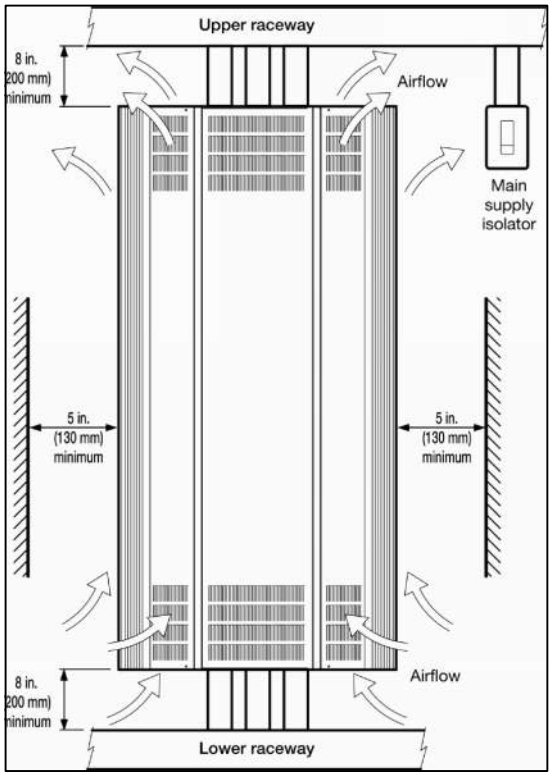


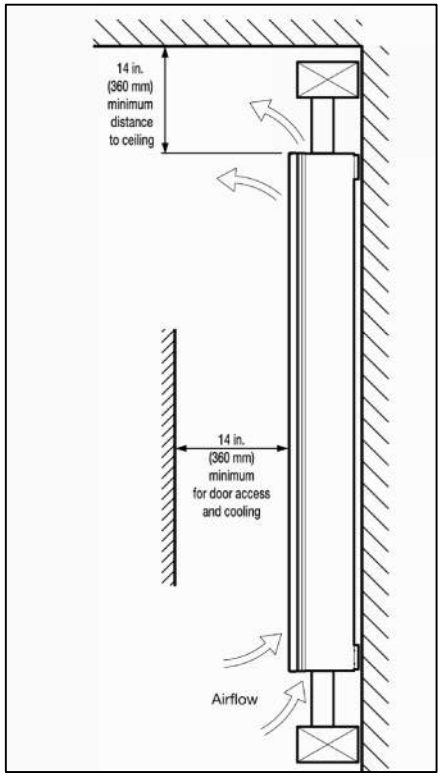


Title:Installation Spacing Detail
Application: iLumin Source Controller

COOPER Controls
203 Cooper Circle
Peachtree City,
GA 30269. USA
Tel: +1-800-553-3879
Fax: +1-800-954-7016
Email: controls@cooperindustries.com

Date:
Project:

**C01**

Revision Date:

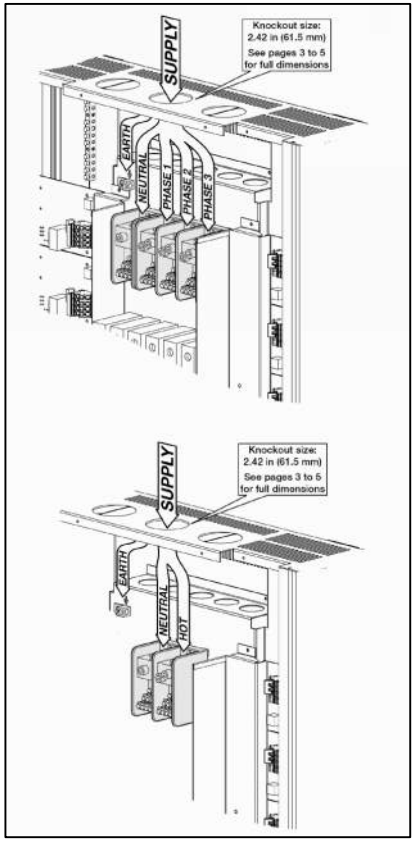


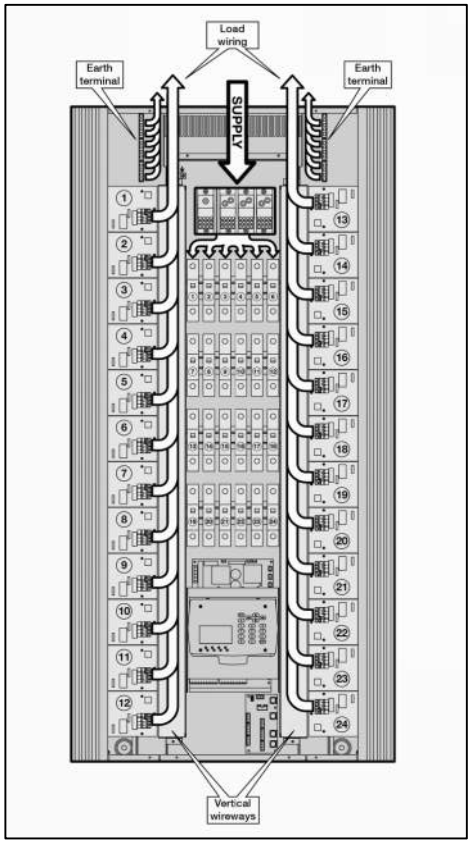


Title:Power Supply Wiring Detail
Application: iLumin Source Controller

COOPER Controls
203 Cooper Circle
Peachtree City,
GA 30269. USA
Tel: +1-800-553-3879
Fax: +1-800-954-7016
Email: controls@cooperindustries.com

Date:
Project:

**C01**

Revision Date:

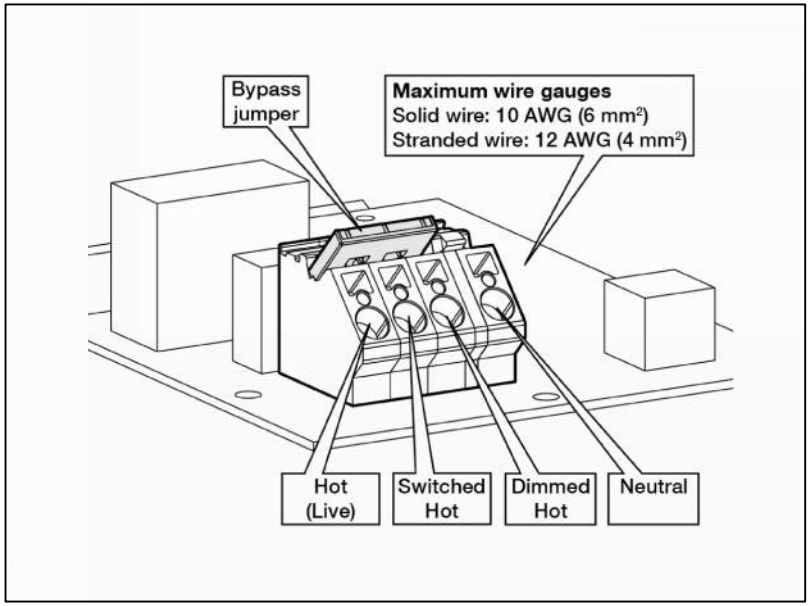


Title:Power Card Wiring Detail
Application: iLumin Source Controller

COOPER Controls
203 Cooper Circle
Peachtree City,
GA 30269. USA
Tel: +1-800-553-3879
Fax: +1-800-954-7016
Email: controls@cooperindustries.com

Date:
Project:

**C01**

Revision Date:

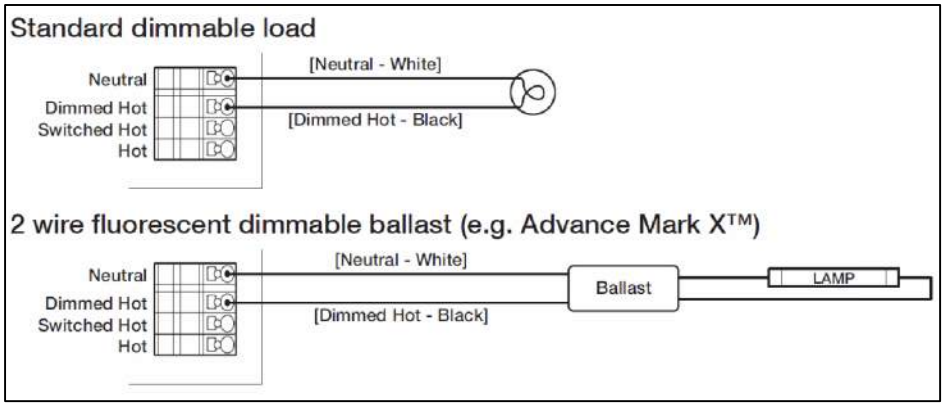


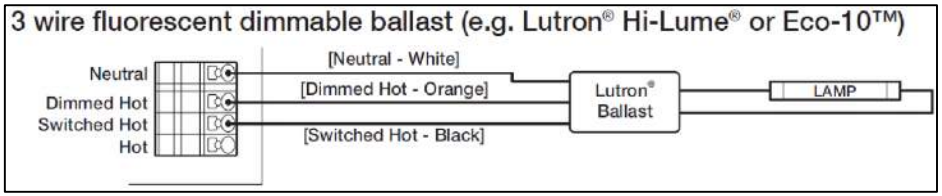


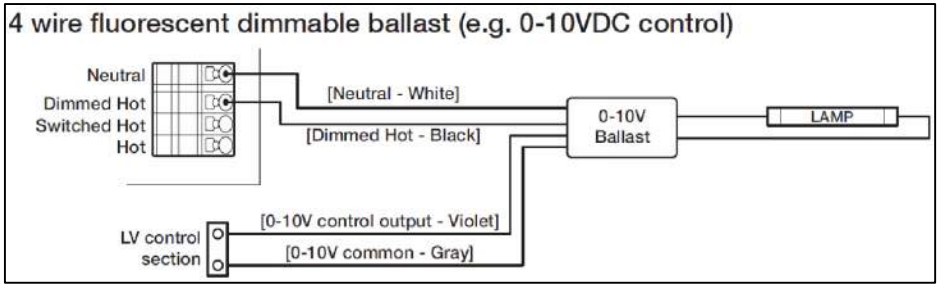


Title:Output Wiring Detail
Application: iLumin Source Controller


COOPER Controls
203 Cooper Circle
Peachtree City,
GA 30269. USA
Tel: +1-800-553-3879
Fax: +1-800-954-7016
Email: controls@cooperindustries.com


Date:
Project:

**C01**

Revision Date:

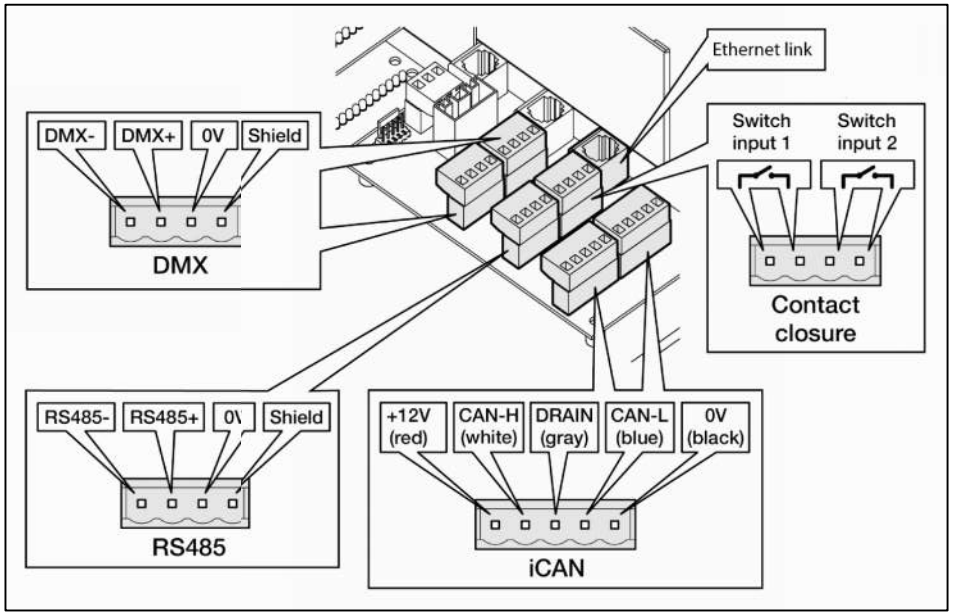


Title: Communications Wiring Detail
Application: iLumin Source Controller


COOPER Controls
203 Cooper Circle
Peachtree City,
GA 30269. USA
Tel: +1-800-553-3879
Fax: +1-800-954-7016
Email: controls@cooperindustries.com


Date:
Project:

**C01**

Revision Date:

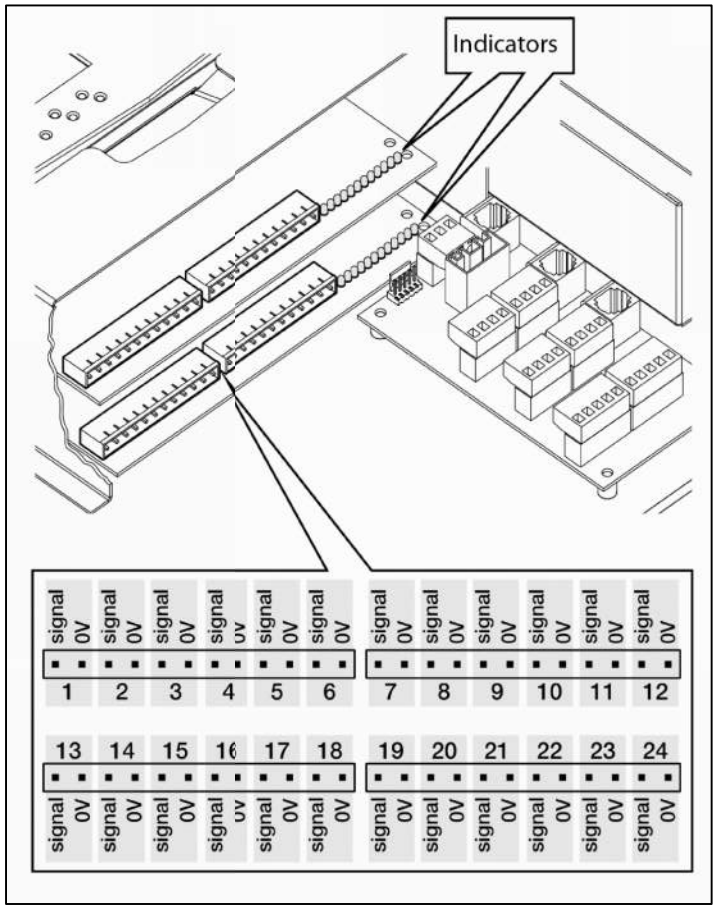


Title: Low Voltage Wiring Detail
Application: iLumin Source Controller

COOPER Controls
203 Cooper Circle
Peachtree City,
GA 30269. USA
Tel: +1-800-553-3879
Fax: +1-800-954-7016
Email: controls@cooperindustries.com

Date:
Project:

**C01**

Revision Date:

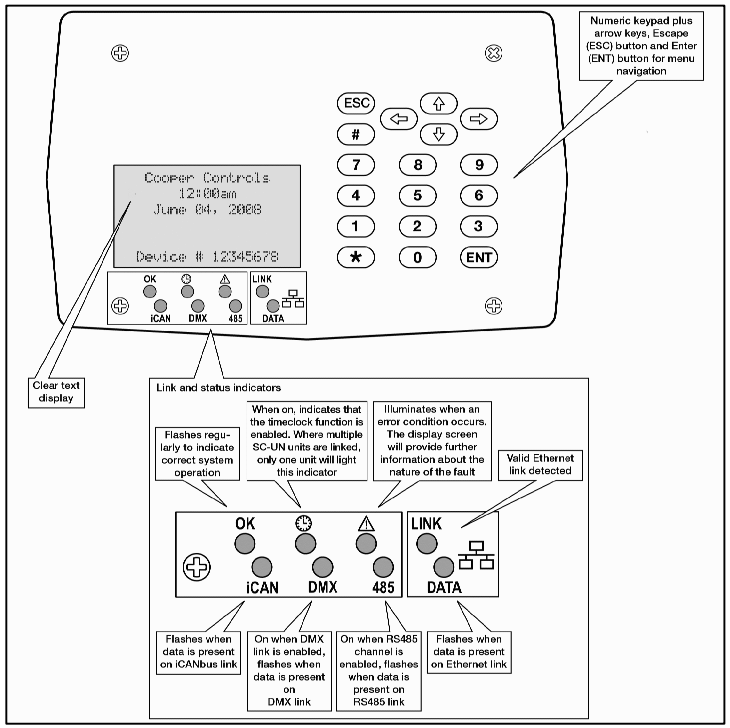


Title: Display and LED Diagram
Application: iLumin Source Controller


COOPER Controls
203 Cooper Circle
Peachtree City,
GA 30269. USA
Tel: +1-800-553-3879
Fax: +1-800-954-7016
Email: controls@cooperindustries.com


Date:
Project:

## Response to Request for Proposal

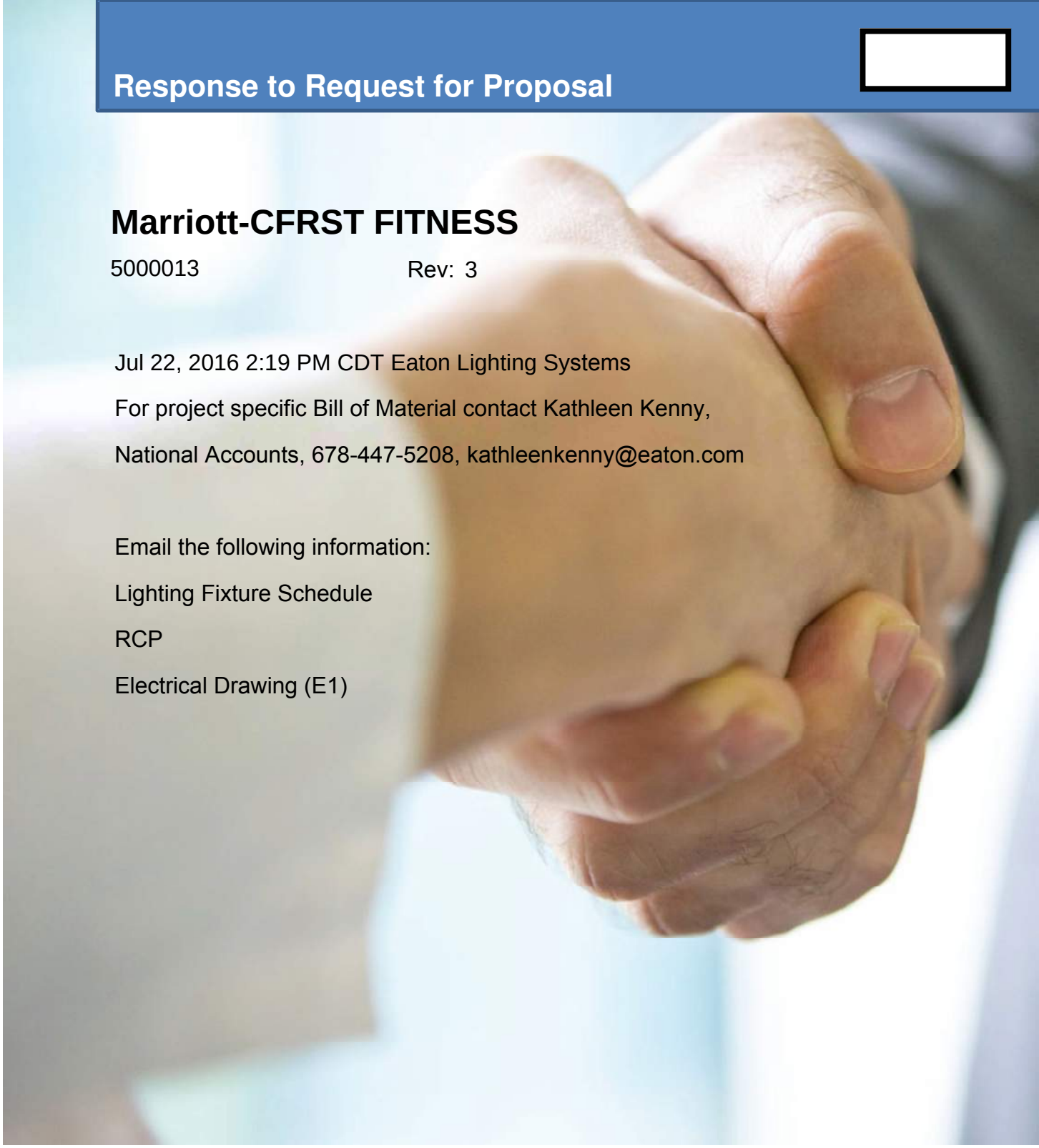

# Marriott-CFRST FITNESS

5000013 Rev: 3

Jul 22, 2016 2:19 PM CDT Eaton Lighting Systems

For project specific Bill of Material contact Kathleen Kenny,

National Accounts, 678-447-5208, kathleenkenny@eaton.com

Email the following information:

Lighting Fixture Schedule

RCP

Electrical Drawing (E1)

Cooper Lighting

by EATON

# Bill of Material

## Marriott-Courtyard

| Quantity | Brand | Catalog # / Line Comments |
|---|---|---|
| 2 | Greengate Panels | OCC-RJ45<br>RJ45 to standard Greengate Low Voltage Occupancy Sensor also BMS and Egress output Device |
| 1 | Greengate Panels | GGRJ45-10P-G<br>RJ45 cables 10 feet Plenum - Green |
| 2 | Greengate Panels | GGRJ45-25P-G<br>RJ45 cables 25 feet Plenum - Green |
| 1 | Greengate Panels | RC3DE-PL<br>3 Relay + 3 Dimmers + 1 Emergency Relay Room Controller 120/277VAC |
| 2 | Greengate Occupancy Sensors | OAC-P-1500-R<br>MicroSet Passive Infrared Technology 1500 sq ft ceiling sensor w/BAS Relay & Daylight Sensor |
| 1 | Greengate Panels | RC-5TSB-OS2-W<br>White 5 Small Button Office Station Pre-Engraved (Half Lights, Full Lights, Raise, Lower, All Off) |
| 1 | Greengate Panels | GGRJ45-25-G<br>RJ45 cables 25 feet - Green |
| 1 | Greengate Panels | DSRC-FMOIR<br>Daylight Sensor - Multizone ceiling or fixture mount |
| | Greengate Panels | No Commissioning<br>Commissioning Services not included. Please contact your Eaton Lighting Systems Quotations Rep for a revised quote if Commissioning services are desired |
| | Greengate Occupancy Sensors | No Commissioning<br>Commissioning Services not included. Please contact your Eaton Lighting Systems Quotations Rep for a revised quote if Commissioning services are desired |
| | | No Drawing Services<br>Factory design services not included. Please contact your Eaton Lighting Systems Quotations Rep for a revised quote if drawing / submittal documents are required |
| | | Standard Warranty<br>Standard product warranty based on date of product shipment. See product documentation for standard warranty information. |

EXAMPLE

# C02

Revision Date:

KEY PLAN

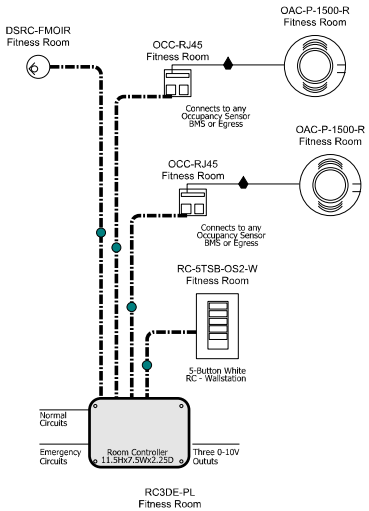


## Notes

| | |
|---|---|
| 1 | This one-line drawing is for concept only. Every wire is not shown. Wire according to the product installation / wiring instructions . |
| 2 | Refer to plans for locations,size and quantity. |
| 3 | Refer to all manufacturers installation instructions for correct wiring information |

## Cables

| | | |
|---|---|---|
| ● | LV3 | Low Voltage Input wire - #18 AWG, 3 conductor wire |
| ● | QC | Quick Connect Cable, Pre-Terminated RJ45 - Category 5 cable provided by Eaton Lighting systems |

| DATE | REV | DESCRIPTION | BY |
|---|---|---|---|

REVISION TABLE

THE INFORMATION ON THIS DRAWING IS THE PROPERTY OF EATON CORPORATION. IT IS DISCLOSED IN CONFIDENCE AND IS NOT TO BE REPRODUCED, USED, OR DISCLOSED EXCEPT FOR THE PURPOSE FOR WHICH FURNISHES.

Eaton Lighting Systems

TITLE:

Marriott-Courtyard

| | | |
|---|---|---|
| DRAWN: | DATE: Jul 22, 2016 1 | PROJ: 5000013 REV: 3 |
| CH'KD: | SCALE: NTS | DWG #: |
| APPR: | SHEET: | |
| | SIZE: A | |

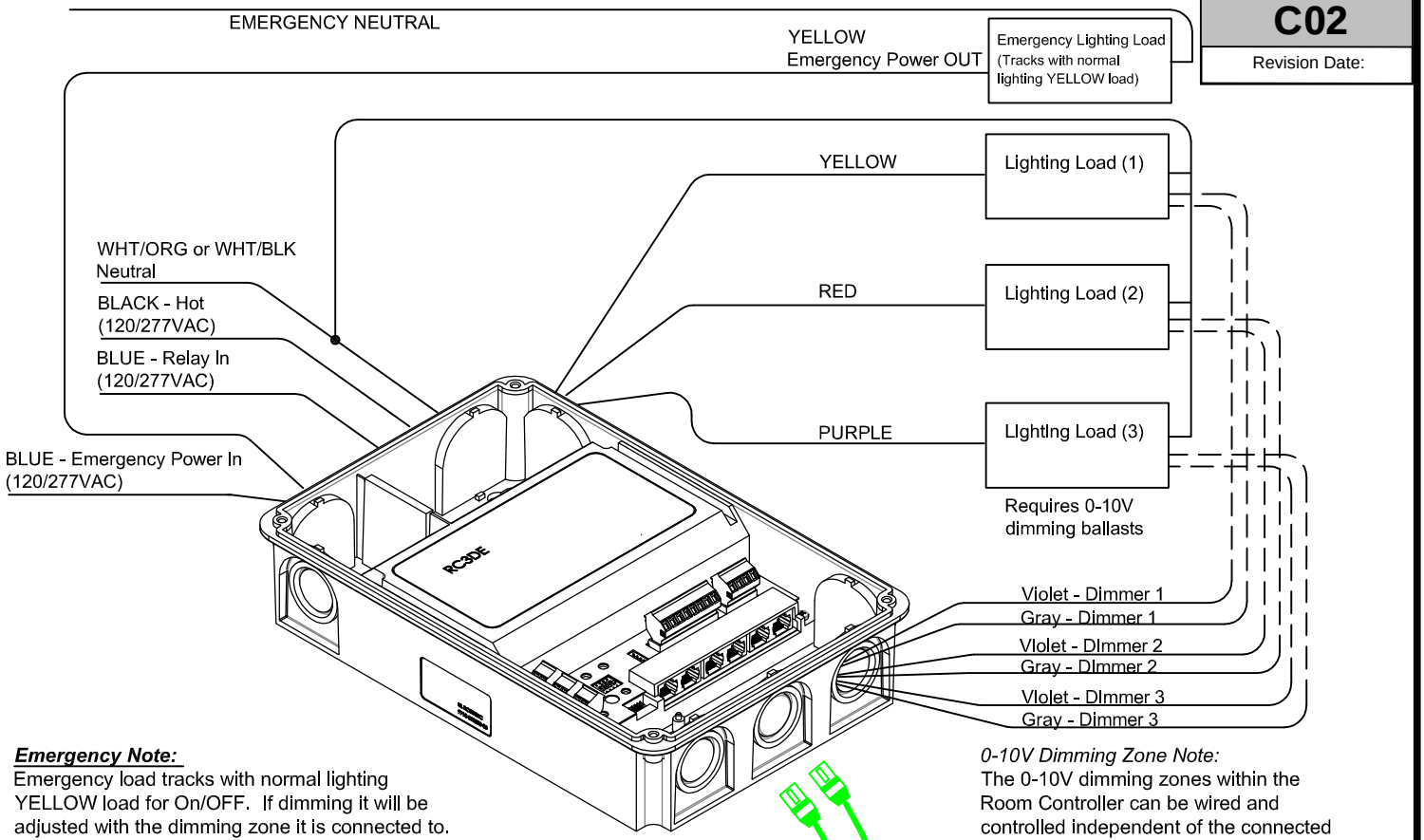


***Emergency Note:***

Emergency load tracks with normal lighting YELLOW load for On/OFF. If dimming it will be adjusted with the dimming zone it is connected to. Upon loss of normal power to the RC3DE, the emergency load will be forced On and full bright to 100%.

In room ladderless testing is done by pressing the "All Off" button four times, within 3 seconds.

The RC3DE is UL924 listed.

*0-10V Dimming Zone Note:*

The 0-10V dimming zones within the Room Controller can be wired and controlled independent of the connected loads. This allows a each load to have a dedicated 0-10V dimming zone or a single load to have up to three 0-10V dimming zones.

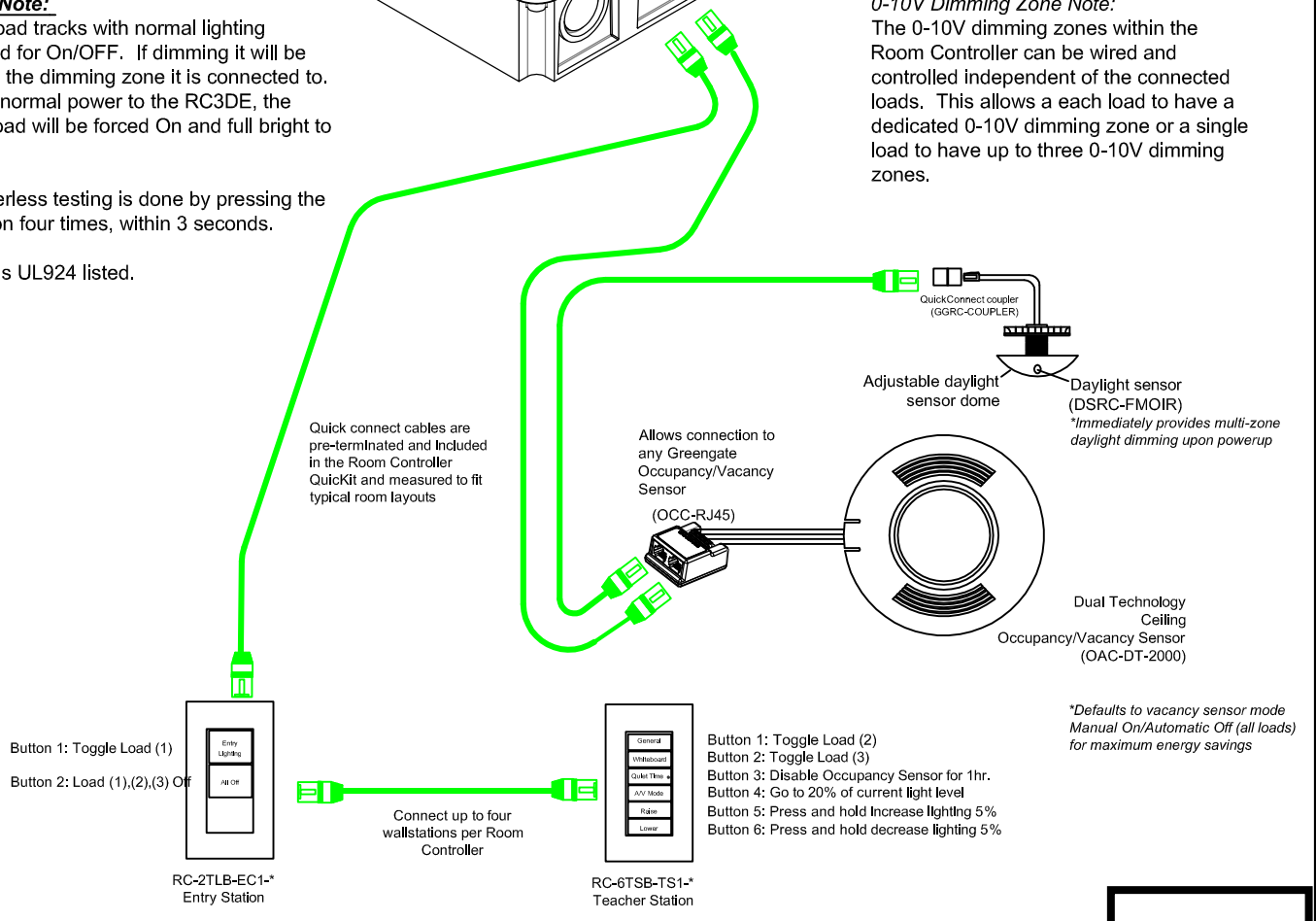


***Room Controller and Smart Devices use Click & Go technology:***

The RC3DE will automtically recognize any smart device connected with the quick connect cable (provided) and start working immediately upon power up with no programming required. The RC3DE defaults to Manual On/Automatic Off vacancy sensor mode for maximum energy savings. Entry wallstations will provide On/Off control of the Yellow load. Teacher stations provide On/Off controll of the Red and Purple loads as well as manual Raise/Lower of all dimmers.

The daylight sensor will automatically on power up provide multi-zone daylight dimming in the space. (remote adjustments can be made later)

**Refer to Room Controller website for more information on other integral no programming required benefits like Demand Response, Solatube Control, Egress Control, BMS Output, Alert Mode, Emergency Lighting Control, and Slider Stations.*

Cooper Controls

203 Cooper Circle
Peachtree City,
GA 30269. USA

Tel: +1-800-553-3879
Fax: +1-800-954-7016
Email: controls@cooperindustries.com
Website: www.coopercontrol.com

Room Controller - RC3DE

Three Relay + Three Dimmers Wiring Diagram + One Emergency Relay

| Drawing Name: | Drawing Date: |
|---|---|
| RC3DE-Classroom.dwg | 1/10/2013 |

Mount wallstations to a single gang wallbox with a minimum internal depth of 2 in. (51mm). Up to four wallstations may be connected to the Room Controller to meet your application.

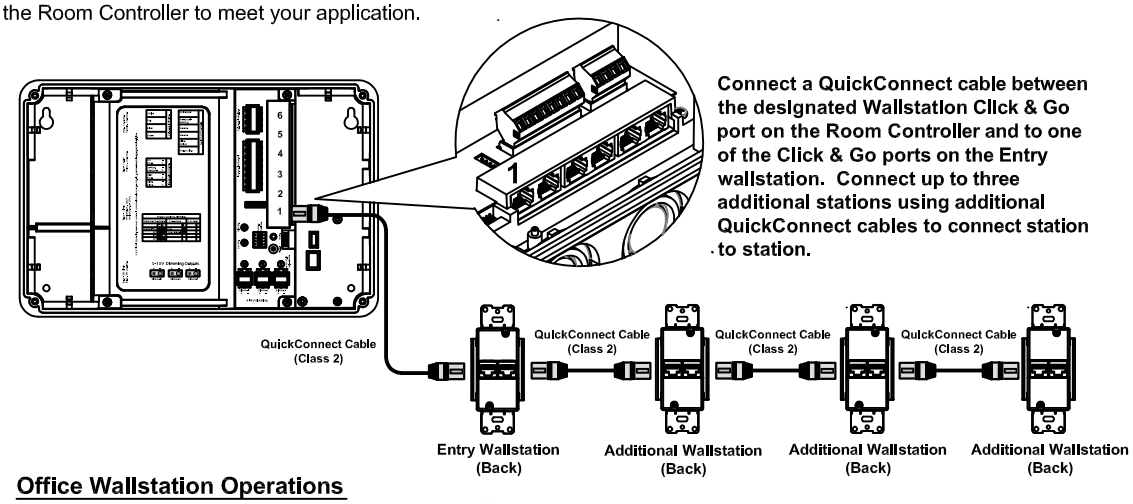


**Connect a QuickConnect cable between the designated Wallstation Click & Go port on the Room Controller and to one of the Click & Go ports on the Entry wallstation. Connect up to three additional stations using additional QuickConnect cables to connect station to station.**

## Office Wallstation Operations

| Program No. | Button Text | Control Type | Function (Unless daylight is disabled, dimmer level will be controlled by the daylight sensor only unless target level is indicated) |
|---|---|---|---|
| 9 | Half Lights | Preset | Load 1 (yellow) ON, Load 2 (red) OFF<br>All dimmers 50%†<br>Solatube Open (RC3DE only) |
| 10 | Full Lights | Preset | Load 1 (yellow) ON, Load 2 (red) ON<br>All dimmers 100%† |
| 11 | Undercabinet | Toggle | Load 3 (purple) ON and OFF |
| 6 | Raise | Raise | Raise all dimmers*† |
| 7 | Lower | Lower | Lower all dimmers* |
| 16 | All ON | Preset | Load 1 (yellow) ON, Load 2 (red) ON, Load 3 (purple) ON<br>All dimmers 100%† |
| 8 | All OFF | Preset | Load 1 (yellow) OFF, Load 2 (red) OFF, Load 3 (purple) OFF<br>Solatube Close (RC3DE only) |
| Slider | | Slider | Raise and Lower all dimmers† |

## Classroom Wallstation Operations

| Program No. | Button Text | Control Type | Function (Unless daylight is disabled, dimmer level will be controlled by the daylight sensor only unless target level is indicated) |
|---|---|---|---|
| 1 | Entry Row 1 Uplights | Toggle | Load 1 (yellow) ON and OFF<br>Solatube Open (RC3DE only) |
| 2 | General Row 2 Downlights | Toggle | Load 2 (red) ON and OFF |
| 3 | Whiteboard Row 3 Accent | Toggle | Load 3 (purple) ON and OFF |
| 4 | A/V Mode | Toggle | Toggles between A/V mode and normal mode. In A/V mode relays will stay in their previous configuration. Dimmers will be reduced to maintain light levels at 20%. † |
| 5 | Quiet Time | Toggle | Disables occupancy sensors for 60 minutes. Toggle allows for re-enabling of normal mode prior to the timer expiring. |
| 6 | Raise | Raise | Raise all dimmers*† |
| 7 | Lower | Lower | Lower all dimmers* |
| 8 | All OFF | | Load 1 (yellow) OFF, Load 2 (red) OFF, Load 3 (purple) OFF<br>Solatube Close (RC3DE only) |
| Slider | | Slider | Raise and Lower all dimmers† |

***Wallstation Operation***

The Room Controller wallstations are pre-labeled and preconfigured for their intended function. They work as soon as they are connected to the Room Controller. Below is a description of the functions of each wallstation button for Office, Classroom and Conference Room configurations. Each button is assigned to a specific program number for how that button should operate. Program numbers may be used for several buttons that accomplish the same goal but may have different engraving. These charts may be used during the checkout process to verify that wallstations are operating properly.


Cooper Controls

203 Cooper Circle
Peachtree City,
GA 30269. USA

Tel: +1-800-553-3879
Fax: +1-800-954-7016
Email: controls@cooperindustries.com
Website: www.coopercontrol.com


Room Controller - Wallstations

Drawing Name: RC-Wallstation1.dwg

Drawing Date: 1/10/2013

## Conference Room Wallstation Operations

| Program No. | Button Text | Control Type | Function (Unless daylight is disabled, dimmer level will be controlled by the daylight sensor only unless target level is indicated) |
|---|---|---|---|
| 12 | General | Preset | Load 1 (yellow) ON, Load 2 (red) ON, Load 3 (purple) ON<br>Dimmer 1: 100%†, Dimmer 2: 80%†, Dimmer 3: 100%†<br>Solatube Open (RC3DE only) |
| 13 | Meeting | Preset | Load 1 (yellow) ON, Load 2 (red) ON, Load 3 (purple) ON<br>Dimmer 1: 80%†, Dimmer 2: 20%†, Dimmer 3: 100%†<br>Solatube Open (RC3DE only) |
| 11 | Whiteboard | Preset | Load 1 (yellow) ON, Load 2 (red) ON, Load 3 (purple) ON<br>Dimmer 1: 50%†, Dimmer 2: 100%†, Dimmer 3: 25%†<br>Solatube Close (RC3DE only) |
| 15 | Presentation | Preset | Load 1 (yellow) ON, Load 2 (red) ON, Load 3 (purple) ON<br>Dimmer 1: 30%†, Dimmer 2: 0%†, Dimmer 3: 25%†<br>Solatube Close (RC3DE only) |
| 6 | Raise | Raise | Raise all dimmers*† |
| 7 | Lower | Lower | Lower all dimmers* |
| 16 | All ON | Preset | Load 1 (yellow) ON, Load 2 (red) ON, Load 3 (purple) ON<br>All dimmers 100%† |
| 8 | All OFF | Preset | Load 1 (yellow) OFF, Load 2 (red) OFF, Load 3 (purple) OFF<br>Solatube Close (RC3DE only) |
| Slider | | Slider | Raise and Lower all dimmers† |

## Wallstation Images

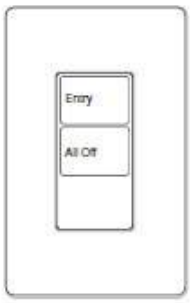

RC-2TLB-ES1

RC-6TSB-TS1

RC-6TSB-TS2

RC-5TSB-TS3

RC-6TSB-TS4

RC-4TSB-TS5

RC-6TSB-TS6

RC-6TSB-TS7

RC-6TSB-TS8

RC-6TSB-CR1

RC-4TSB-HC1

RC-6TSB-HC2

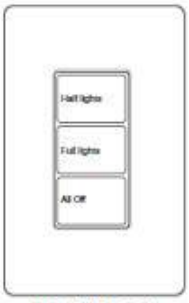

RC-3TLB-OS1

RC-5TSB-OS2

RC-6TSB-OS3

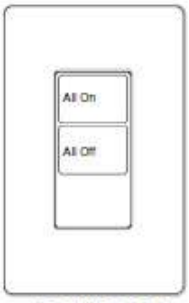

RC-2TLB-OS4

***Wallstation Operation***

The Room Controller wallstations are pre-labeled and preconfigured for their intended function. They work as soon as they are connected to the Room Controller. Below is a description of the functions of each wallstation button for Office, Classroom and Conference Room configurations. Each button is assigned to a specific program number for how that button should operate. Program numbers may be used for several buttons that accomplish the same goal but may have different engraving. These charts may be used during the checkout process to verify that wallstations are operating properly.


Cooper Controls

203 Cooper Circle
Peachtree City,
GA 30269. USA

Tel: +1-800-553-3879
Fax: +1-800-954-7016
Email: controls@cooperindustries.com
Website: www.coopercontrol.com


Room Controller - Wallstations

Drawing Name: RC-Wallstation2.dwg

Drawing Date: 1/10/2013

The daylight sensor can be mounted to a ceiling tile or fixture using the threaded post and locking washer over materials up to a 0.75" thickness. The accessory mounting bracket (DSCM-MT) allows the daylight sensor to be mounted to a hard wall.

1. Ensure the daylight sensor is not obstructed and is not looking directly at electric lighting.
2. For skylights that contain motor controls, ensure the daylight sensor is mounted below the daylight blocking mechanism.
3. Remember to adjust the sensor head to point the arrow and lens in the correct position.

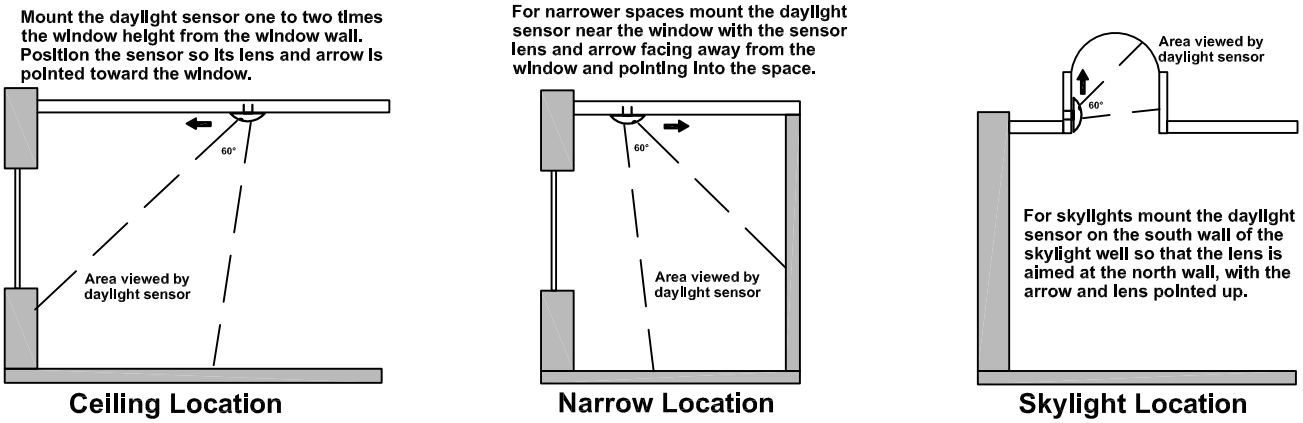


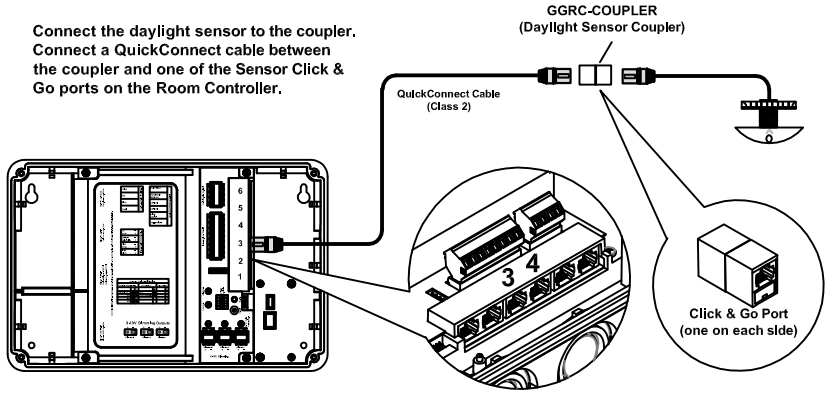


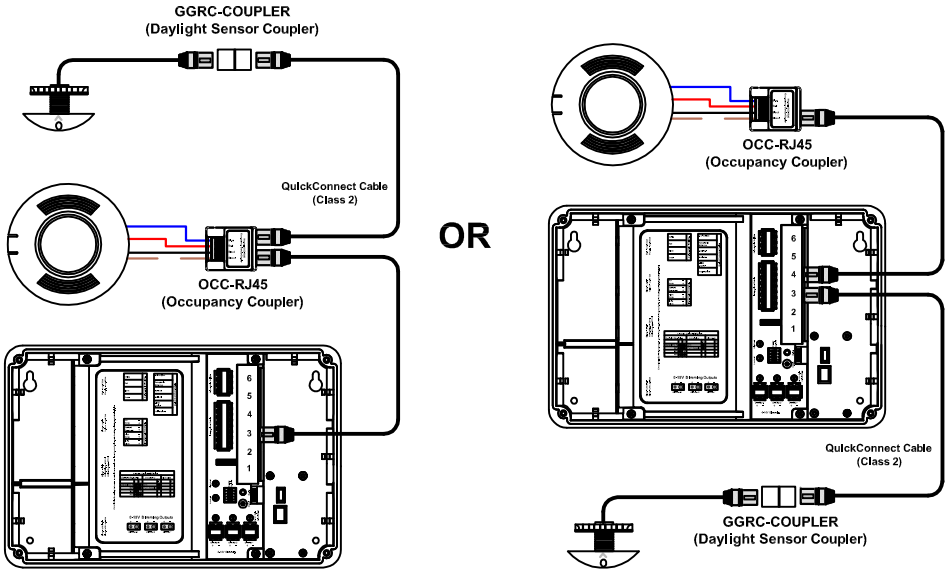


***Room Controller and the Daylight Sensor***

One DSRC-FMOIR daylight sensor may be connected to the Room Controller. The daylight sensor connects using the provided GGRC-Coupler daylight sensor coupler and QuickConnect Cable.

Once the daylight sensor mounting area is prepared, attach the GGRC-Coupler to the sensor leads matching the wire colors to the label on the occupancy coupler as shown. Connect the Occupancy Coupler to one of the two sensor ports on the Room Controller. Use the shortest lengths of QuickConnect cable from your QuickConnect cable from your QuicKit that will reach the desired location.


Cooper Controls

203 Cooper Circle
Peachtree City,
GA 30269. USA

Tel: +1-800-553-3879
Fax: +1-800-954-7016
Email: controls@cooperindustries.com
Website: www.coopercontrol.com


Room Controller -
Daylight Sensor

| Drawing Name: | Drawing Date: |
|---|---|
| RC-DayllghtSensor.dwg | 1/10/2013 |

**Technical Data**

# Multi-Load Decorator Dimmer Wallstation

For use with all standard incandescent and LE/TE LED Loads, see next spec sheet for 0-10V loads. Load type is indicated on fixtures spec sheet and Marriott Lighting Matrix.

| | |
|---|---|
| Catalog# WBSD-DEC-C1 | Prepared by Kathleen Kenny |
| Project | Date |
| Comments | Type |

California Title 20 Compliant

## Overview

The Multi-load Decorator Dimmer provides full-range classic linear-slide dimming for 300W dimmable LED and CFL as well as 600W Incandescent, Halogen, Dimmable Fluorescent, Electronic Low-Voltage & Magnetic Low-Voltage light sources. Preset units feature a preset "ON/OFF" switch that automatically returns controlled light(s) to a preset level without disturbing the brightness level. The device is designed for both Single-Pole (one location) and 3-Way (multi-location) applications, and features an adjustable Rapid-Start setting which provides additional power for a brief time period to ensure lamp start-up at low dim settings.

## Features

- Preset feature allows user to return to previous light level when turning lights ON
- Integrated full-slide control for easy, precise operation
- Can be wired as Single-Pole or 3-Way
- Device can be wired into either 3-Way location (load side or line side)
- Neutral is not required for installation of device
- Adjustable low-level trim setting for optimal lamp compatibility
- Face plate is removable to allow for color changes
- Each package includes 3 colors
- Radio Frequency Interface filtering is standard on all models
- Electrostatic discharge protection
- Compatible with any decorator wallplate
- Compatible with most dimmable LED and CFL lamps
- Adjustable rapid start feature ensures lamp start-up even at low dim levels

EATON
*Powering Business Worldwide*

September 2015

**C03**
Revision Date:

## Specifications

| | |
|---|---|
| **Switch Type** | Single-pole and 3-way |
| **Environment** | **Flammability:** Meets UL 94 requirements; V2 rated |
| | **Temperature Rating:** -20°C to 70°C (-4°F to 158°F) |
| **Electrical** | **Rating:** 120V/AC, 60 Hz |
| | **Light Intensity Control:** Full-range, continuously variable dimming |
| | **Dimming Performance:** Solid State Dimming |
| | **Surge Protection:** Meets ANSI/IEEE Std. C62.41-1980, tested to withstand voltage surges up to 6000V and current surges of up to 200A without damage |
| | **Radio Frequency Interference:** Designed to reduce interference with radio, audio and video equipment |
| | **Power-failure Memory:** Light returns to same level prior to power interruption |
| | **Lamp Ratings:**<br>300W Dimmable LED/CFL<br>600W Incandescent, Halogen, Dimmable Fluorescent, Electronic Low-Voltage, Magnetic Low-Voltage |
| **Mechanical** | **Wiring Types:** Single-Pole and 3-Way |
| | **Voltage Ratings:** Permanently marked on device |
| **Standards** | cULus Listed to UL1472, file no.E472273<br>NOM Certified |

**De-Rating Chart**

| | 600W Models | | |
|---|---|---|---|
| | **1-Gang** | **2-Gang** | **3-Gang +** |
| **LED/CFL** | 300W max. | 300W max. | 300W max. |
| **INC, HAL, ELV** | 600W max. | 600W max. | 600W max. |
| **MLV** | 600VA max. | 600VA max. | 600VA max. |
| **FLR** | See Ballast Performance Data pages | | |

## Wiring Diagrams

### Single-Pole Wiring Diagram
INC, HAL, LED/CFL, FLR, MLV, ELV

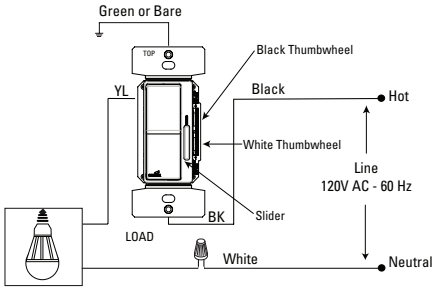


NOTE: Location of terminal screws are color-coded with "BK" or "YL".

### 3-Way Wiring Diagram
INC, HAL, LED/CFL, FLR, MLV, ELV

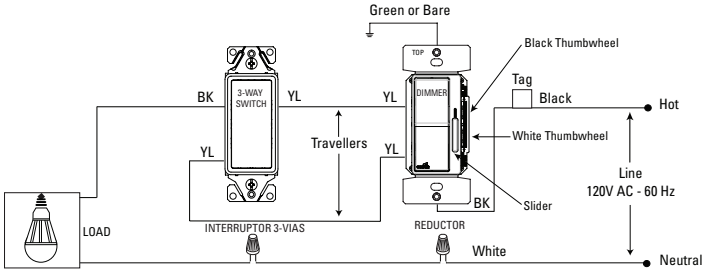


NOTE: 3-way switch must be used at the other location.

## Ordering

*Wallplate not included

For ordering devices, include Catalog # followed by the color code: C1 (Almond, White, Ivory), C2 (Light Almond, White, Ivory), C5 (Black, Gray, White), A (Almond), BK (Black), B (Brown), GY (Gray), LA (Light Almond), V (Ivory), W (White)

| Catalog # | Description | Colors |
|---|---|---|
| WBSD-DEC-* | Decorator Dimmer, Single-Pole/ 3-Way Preset, Multi-Load | C1, C2, C5 |
| DCK1-* | Color Change Kit | A, BK, B, GY, LA, V, W |

Refer to Screwless Wallplate Spec Sheet for ordering information at www.eaton.com/lightingsystems

**Eaton**
1000 Eaton Boulevard
Cleveland, OH 44122
United States
Eaton.com

Eaton
Lighting systems
203 Cooper Circle
Peachtree City, GA 30269
www.eaton.com/lightingsystems

© 2015 Eaton
All Rights Reserved
Printed in USA
Publication No. TD503033EN
September 2, 2015

Eaton is a registered trademark.

All other trademarks are property of their respective owners.

Powering Business Worldwide

# 0-10V Decorator Dimmer Wallstation

For use with all 0-10V fixtures in Meeting Room

| | |
|---|---|
| Catalog# WBSD-010DEC-C1 | Prepared by Kathleen Kenny |
| Project | Date |
| Comments | Type |

California Title 20 Compliant

c UL us LISTED DIMMERS 6B28

## Overview

The 0-10V Decorator Dimmer provides full-range classic linear-slide dimming for 0-10 Volt compatible dimmable light sources. These units are ideal for light commercial applications and are compatible with decorator style devices and wallplates. Units feature a preset "ON/OFF" switch that automatically returns controlled light(s) to a preset level without disturbing the brightness level. The device is designed for both Single-pole (one location) and 3-way (multi-location) applications.

## Features

- Preset feature allows user to return to previous light level when turning lights ON
- Integrated full-slide control for easy, precise operation
- Can be wired as Single-pole or 3-way
- Neutral is not required for installation of device
- Adjustable high-level trim setting for optimal lamp compatibility
- Each package includes faceplate kit with 3 colors

Powering Business Worldwide

## Specifications

| | |
|---|---|
| **Switch Type** | Single-pole and 3-way |
| **Dimming Control** | 0-10 VDC: 200mA Sink |
| | Sink Dimming |
| **Electrical Ratings** | **120 VAC:**<br>Max. Load: 10 amps, 1200W, 60 Hz |
| | **277 VAC:**<br>Max Load: 6 amps, 1660W, 60 Hz |
| **Light Intensity Control** | Full-range, continuously variable dimming |
| | Adjustable High-level trim setting |
| **Power Failure Memory** | Light returns to same level prior to power interruption |
| **Wiring Type** | Back & side wiring terminals; 12-14 AWG (Copper wire) |
| | 0-10V wire leads; 16 AWG |
| **Flammability** | Meets UL 94 requirements, V2 rated |
| **Temperature** | -4°F to 158°F (-20°C to 70°C) |

## Wiring Diagrams

**FIGURE 1: SINGLE-POLE WIRING DIAGRAM**

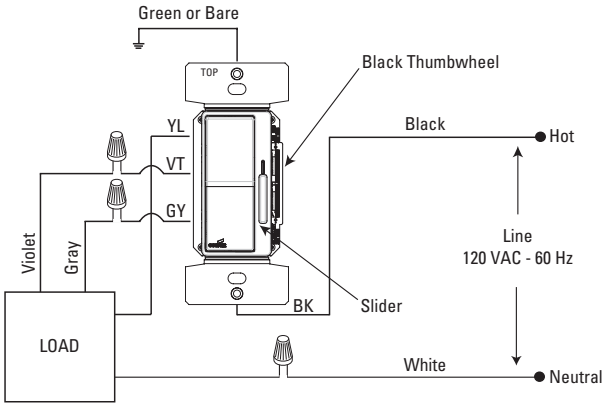


*

**FIGURE 2: 3-WAY WIRING DIAGRAM**

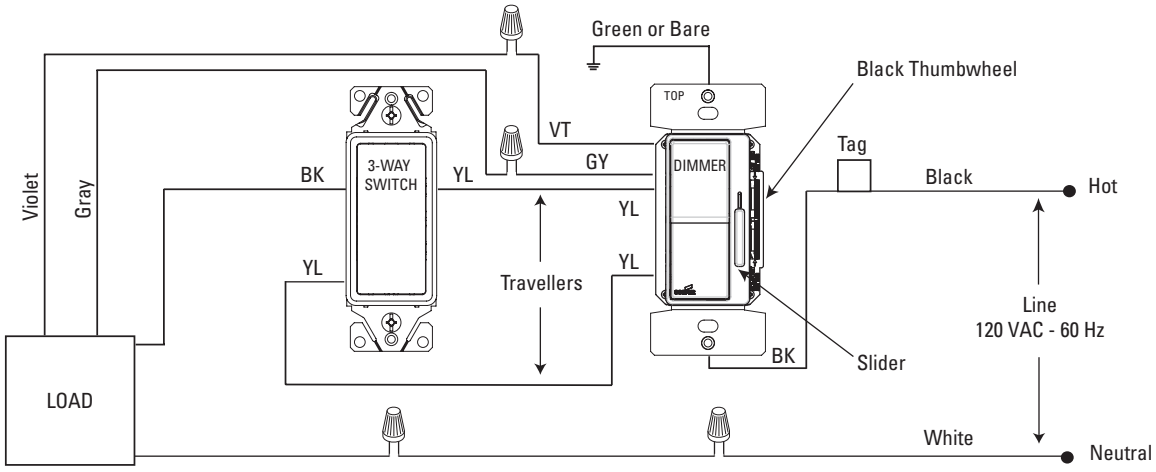


*Can be installed on load or line side in 3-way applications

Visit our website for additional wiring details at
www.eaton.com/lightingsystems

August 2016

**C03**
Revision Date:

## Ordering

*Wallplate not included

This is an accessory for the Greengate Lighting Control System. When ordering, specify the 0-10V dimming wallstation as a separate system accessory.

| Catalog # | Description |
|---|---|
| WBSD-010DEC-C1 | Decorator Dimmer 0-10V, 120/277 VAC, w/ White, Ivory and Almond faceplate color kit |
| WBSD-010DEC-C2 | Decorator Dimmer 0-10V, 120/277 VAC, w/ White, Ivory and Light Almond faceplate color kit |
| WBSD-010DEC-C5 | Decorator Dimmer 0-10V, 120/277 VAC, w/ White, Black and Gray faceplate color kit |

* Refer to Screwless Wallplate Spec Sheet for ordering information at www.eaton.com/lightingsystems.

**Note:** Custom engraving is not available on 0-10V dimming wallstations.

**Eaton**
1000 Eaton Boulevard
Cleveland, OH 44122
United States
Eaton.com

Eaton
Lighting systems
1121 Highway 74 South
Peachtree City, GA 30269
www.eaton.com/lightingsystems

© 2016 Eaton
All Rights Reserved
Printed in USA
Publication No. TD503060EN
August18, 2016

Eaton is a registered trademark.

All other trademarks are property of their respective owners.

Powering Business Worldwide

# Metalux

## DESCRIPTION

SNLED Lensed is a narrow LED lensed striplight series. This high quality luminaire is dedicated to the latest solid state lighting and electronic driver technology for optimal performance and energy efficiency. This Lensed product is available with three different lens types.

The small size of the SNLED makes it an ideal choice for size restricted architectural applications. The SNLED Series can be the illumination solution in commercial, industrial, retail and residential applications. Fixtures can be used in storage/utility areas, coves, display cases, shops, task and general area lighting.

| | | |
|---|---|---|
| **Catalog #** | 4SNLED-LD4-27SL-LW-UNV-L830-CD1-U | **Type** ALJ-01 |
| **Project** | Aloft | Revision Date: |
| **Comments** | | **Date** |
| **Prepared by** | Katheen Kenny, National Accounts, 678-447-5208, kathleenkenny@eaton.com | |

# SNLED LENSED LED

Lensed LED Striplight

powered by fifthlight technology

## SPECIFICATION FEATURES

**Construction**
Channel is die formed cold rolled steel with numerous KOs for ease of installation. Groove for Tong Hanger. End plate quickly converts to snap-in channel connector for continuous row alignment. Channel/wireway cover secured with sheet metal screws.

**Controls**
Equipped standard with a 0-10V continuous dimming driver that works with any standard 0-10V control/dimmer. Dimming range is 10% to 100%; varies by control device. Combine with energy-saving products like occupancy sensors, day lighting controls, and lighting relay panels to maximize energy savings. For motion control, reference options for both end and middle of the row applications.

**Electrical**
Long-Life LED system coupled with electronic (120-277V) driver to deliver optimal lighting performance. LED's available in 3000K, 3500K, 4000K, or 5000K with a CRI ≥ 85. Other color temperatures are available. Projected life is 60,000 + hours at 70% lumen output based on TM21. This driver is 0-10V dimming standard.

**Emergency Battery Pack Option**
Optional 120v-277v integral emergency battery pack is available in 7-watts or 14-watts to meet critical life-safety lighting requirements. The 90-minute batteries provide constant power to the LED system, ensuring code-compliance. A test switch/indicator button can be tested safely from the ground using a laser pointer, while the patented EZ Key prevents accidental discharge of the battery during construction. See ordering information for details.

**Finish**
Multistage iron phosphate pretreatment ensures maximum bonding and rust inhibitor. High reflective paint after fabrication, baked white enamel finish is standard.

**Channel/Wireway Cover**
Die formed heavy gauge steel. Tight fit for ease of maintenance.

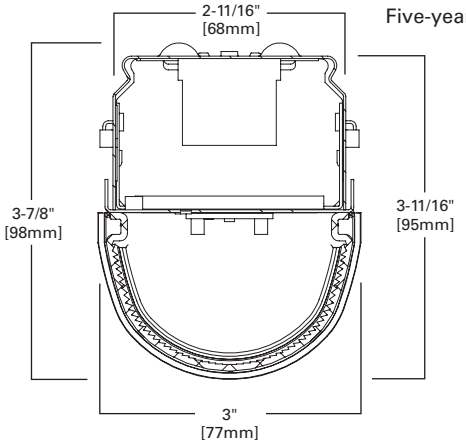


**Shielding**
Offers three different lensed optical distributions. (LC) Clear with linear optical ribs. (LN) Semi-frost for narrow distribution. (LW) Full frost for wide distribution.

**Installation**
Fixture may be surface, pendant, or stem mounted. See accessories below in ordering information.

**Compliance**
Components are UL recognized. Indoor luminaires are cULus listed for 40° C ambient environments, RoHS compliant, damp location listed, and comply with IESNA LM-79. LEDs comply with LM-80 standards. DesignLights Consortium® Qualified. Refer to www.designlights.org Qualified Products List under Family Models for details.

**Warranty**
Five-year warranty.

## MOUNTING DATA

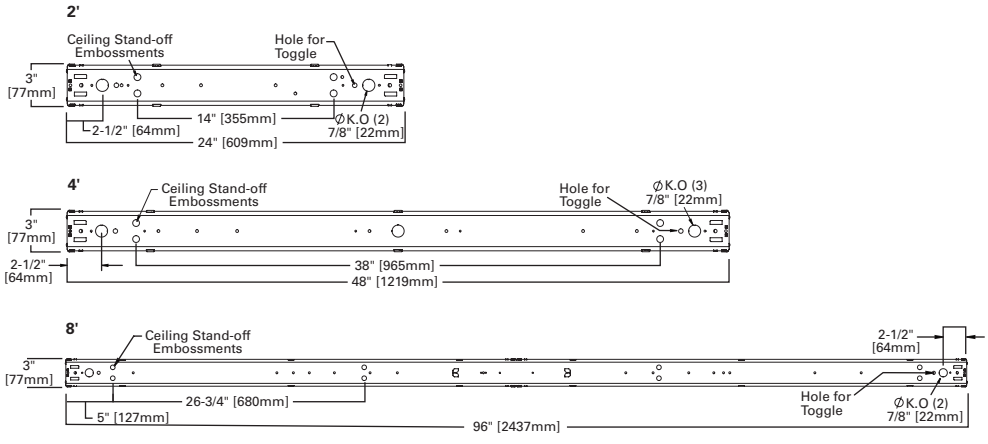


LINEAR DISCONNECT
Safe and convenient means of disconnecting power

Powering Business Worldwide

## WATTAGE

**ALJ-01**
Revision Date:

| SNLED Type | Stock* / MTO | Lumen Type | Length | Catalog Logic | Nominal Lumens | Wattage | lm/W |
|---|---|---|---|---|---|---|---|
| Clear Lens (LC) | MTO | Standard | 2 ft. | 2SNLED-LD4-18SL-LC-UNV-L8XX-CD1-U | 1907 | 17 | 105 |
| Clear Lens (LC) | MTO | Standard | 2 ft. | 2SNLED-LD4-22SL-LC-UNV-L8XX-CD1-U | 2325 | 22 | 101 |
| Clear Lens (LC) | MTO | Standard | 2 ft. | 2SNLED-LD4-26SL-LC-UNV-L8XX-CD1-U | 2712 | 23 | 112 |
| Clear Lens (LC) | MTO | Standard | 4 ft. | 4SNLED-LD4-18SL-LC-UNV-L8XX-CD1-U | 2038 | 16 | 111 |
| Clear Lens (LC) | MTO | Standard | 4 ft. | 4SNLED-LD4-22SL-LC-UNV-L8XX-CD1-U | 2301 | 18 | 120 |
| Clear Lens (LC) | Stock | Standard | 4 ft. | 4SNLED-LD4-26SL-LC-UNV-L8XX-CD1-U | 2688 | 22 | 120 |
| Clear Lens (LC) | Stock | Standard | 4 ft. | 4SNLED-LD4-30SL-LC-UNV-L8XX-CD1-U | 3061 | 25 | 120 |
| Clear Lens (LC) | MTO | Standard | 4 ft. | 4SNLED-LD4-34SL-LC-UNV-L8XX-CD1-U | 3431 | 28 | 120 |
| Clear Lens (LC) | MTO | Standard | 4 ft. | 4SNLED-LD4-37SL-LC-UNV-L8XX-CD1-U | 3822 | 32 | 114 |
| Clear Lens (LC) | MTO | Standard | 4 ft. | 4SNLED-LD4-41SL-LC-UNV-L8XX-CD1-U | 4233 | 37 | 112 |
| Clear Lens (LC) | Stock | Standard | 4 ft. | 4SNLED-LD4-46SL-LC-UNV-L8XX-CD1-U | 4615 | 41 | 112 |
| Clear Lens (LC) | MTO | Standard | 4 ft. | 4SNLED-LD4-49SL-LC-UNV-L8XX-CD1-U | 4994 | 46 | 107 |
| Clear Lens (LC) | MTO | Standard | 4 ft. | 4SNLED-LD4-52SL-LC-UNV-L8XX-CD1-U | 5357 | 50 | 104 |
| Clear Lens (LC) | MTO | Standard | 4 ft. | 4SNLED-LD4-56SL-LC-UNV-L8XX-CD1-U | 5714 | 56 | 99 |
| Clear Lens (LC) | MTO | High | 4 ft. | 4SNLED-LD4-60HL-LC-UNV-L8XX-CD1-U | 6115 | 51 | 118 |
| Clear Lens (LC) | MTO | Standard | 8 ft. | 8TSNLED-LD4-60SL-LC-UNV-L8XX-CD1-U | 6122 | 50 | 120 |
| Clear Lens (LC) | MTO | Standard | 8 ft. | 8TSNLED-LD4-68SL-LC-UNV-L8XX-CD1-U | 6863 | 57 | 120 |
| Clear Lens (LC) | Stock | Standard | 8 ft. | 8TSNLED-LD4-75SL-LC-UNV-L8XX-CD1-U | 7643 | 65 | 116 |
| Clear Lens (LC) | Stock | Standard | 8 ft. | 8TSNLED-LD4-83SL-LC-UNV-L8XX-CD1-U | 8466 | 73 | 113 |
| Clear Lens (LC) | MTO | Standard | 8 ft. | 8TSNLED-LD4-90SL-LC-UNV-L8XX-CD2-U | 9230 | 82 | 110 |
| Clear Lens (LC) | MTO | Standard | 8 ft. | 8TSNLED-LD4-98SL-LC-UNV-L8XX-CD2-U | 9988 | 91 | 107 |
| Clear Lens (LC) | MTO | Standard | 8 ft. | 8TSNLED-LD4-105SL-LC-UNV-L8XX-CD2-U | 10714 | 100 | 105 |
| Clear Lens (LC) | MTO | High | 8 ft. | 8SNLED-LD4-130HL-LC-UNV-L8XX-CD1-U | 13000 | 130 | 100 |
| Clear Lens (LC) | MTO | High | 8 ft. | 8SNLED-LD4-170HL-LC-UNV-L8XX-CD1-U | 17460 | 140 | 125 |

| SNLED Type | Stock* / MTO | Lumen Type | Length | Catalog Logic | Nominal Lumens | Wattage | lm/W |
|---|---|---|---|---|---|---|---|
| Semi-Frost Lens (LN) | MTO | Standard | 2 ft. | 2SNLED-LD4-18SL-LN-UNV-L8XX-CD1-U | 1901 | 17 | 105 |
| Semi-Frost Lens (LN) | MTO | Standard | 2 ft. | 2SNLED-LD4-22SL-LN-UNV-L8XX-CD1-U | 2318 | 22 | 101 |
| Semi-Frost Lens (LN) | MTO | Standard | 2 ft. | 2SNLED-LD4-26SL-LN-UNV-L8XX-CD1-U | 2704 | 23 | 116 |
| Semi-Frost Lens (LN) | MTO | High | 2 ft. | 2SNLED-LD4-32HL-LN-UNV-L8XX-CD1-U | 3200 | 32 | 100 |
| Semi-Frost Lens (LN) | MTO | Standard | 4 ft. | 4SNLED-LD4-18SL-LN-UNV-L8XX-CD1-U | 2032 | 16 | 111 |
| Semi-Frost Lens (LN) | MTO | Standard | 4 ft. | 4SNLED-LD4-22SL-LN-UNV-L8XX-CD1-U | 2294 | 18 | 120 |
| Semi-Frost Lens (LN) | Stock | Standard | 4 ft. | 4SNLED-LD4-26SL-LN-UNV-L8XX-CD1-U | 2680 | 22 | 120 |
| Semi-Frost Lens (LN) | Stock | Standard | 4 ft. | 4SNLED-LD4-30SL-LN-UNV-L8XX-CD1-U | 3052 | 25 | 120 |
| Semi-Frost Lens (LN) | MTO | Standard | 4 ft. | 4SNLED-LD4-34SL-LN-UNV-L8XX-CD1-U | 3421 | 28 | 120 |
| Semi-Frost Lens (LN) | MTO | Standard | 4 ft. | 4SNLED-LD4-37SL-LN-UNV-L8XX-CD1-U | 3810 | 32 | 114 |
| Semi-Frost Lens (LN) | MTO | Standard | 4 ft. | 4SNLED-LD4-41SL-LN-UNV-L8XX-CD1-U | 4220 | 37 | 112 |
| Semi-Frost Lens (LN) | Stock | Standard | 4 ft. | 4SNLED-LD4-46SL-LN-UNV-L8XX-CD1-U | 4601 | 41 | 112 |
| Semi-Frost Lens (LN) | MTO | Standard | 4 ft. | 4SNLED-LD4-49SL-LN-UNV-L8XX-CD1-U | 4979 | 46 | 107 |
| Semi-Frost Lens (LN) | MTO | Standard | 4 ft. | 4SNLED-LD4-53SL-LN-UNV-L8XX-CD1-U | 5341 | 50 | 106 |
| Semi-Frost Lens (LN) | MTO | Standard | 4 ft. | 4SNLED-LD4-56SL-LN-UNV-L8XX-CD1-U | 5697 | 56 | 99 |
| Semi-Frost Lens (LN) | MTO | High | 4 ft. | 4SNLED-LD4-60HL-LN-UNV-L8XX-CD1-U | 6096 | 51 | 118 |
| Semi-Frost Lens (LN) | MTO | Standard | 8 ft. | 8TSNLED-LD4-60SL-LN-UNV-L8XX-CD1-U | 6103 | 50 | 120 |
| Semi-Frost Lens (LN) | MTO | Standard | 8 ft. | 8TSNLED-LD4-68SL-LN-UNV-L8XX-CD1-U | 6842 | 57 | 120 |
| Semi-Frost Lens (LN) | Stock | Standard | 8 ft. | 8TSNLED-LD4-75SL-LN-UNV-L8XX-CD1-U | 7620 | 65 | 116 |
| Semi-Frost Lens (LN) | Stock | Standard | 8 ft. | 8TSNLED-LD4-83SL-LN-UNV-L8XX-CD1-U | 8441 | 73 | 113 |
| Semi-Frost Lens (LN) | MTO | Standard | 8 ft. | 8TSNLED-LD4-91SL-LN-UNV-L8XX-CD2-U | 9202 | 82 | 111 |
| Semi-Frost Lens (LN) | MTO | Standard | 8 ft. | 8TSNLED-LD4-98SL-LN-UNV-L8XX-CD2-U | 9958 | 91 | 107 |
| Semi-Frost Lens (LN) | MTO | Standard | 8 ft. | 8TSNLED-LD4-106SL-LN-UNV-L8XX-CD2-U | 10681 | 100 | 106 |
| Semi-Frost Lens (LN) | MTO | High | 8 ft. | 8TSNLED-LD4-130HL-LN-UNV-L8XX-CD2-U | 13000 | 130 | 100 |
| Semi-Frost Lens (LN) | MTO | High | 8 ft. | 8TSNLED-LD4-170HL-LN-UNV-L8XX-CD2-U | 17100 | 140 | 122 |

## WATTAGE

**ALJ-01**
Revision Date:

| SNLED Type | Stock* / MTO | Lumen Type | Length | Catalog Logic | Nominal Lumens | Wattage | lm/W |
|---|---|---|---|---|---|---|---|
| Full Frost Lens (LW) | MTO | Standard | 2 ft. | 2SNLED-LD4-16SL-LW-UNV-L8XX-CD1-U | 1702 | 17 | 99 |
| Full Frost Lens (LW) | MTO | Standard | 2 ft. | 2SNLED-LD4-20SL-LW-UNV-L8XX-CD1-U | 2075 | 22 | 92 |
| Full Frost Lens (LW) | MTO | Standard | 2 ft. | 2SNLED-LD4-23SL-LW-UNV-L8XX-CD1-U | 2421 | 23 | 104 |
| Full Frost Lens (LW) | MTO | Standard | 4 ft. | 4SNLED-LD4-16SL-LW-UNV-L8XX-CD1-U | 1819 | 16 | 111 |
| Full Frost Lens (LW) | MTO | Standard | 4 ft. | 4SNLED-LD4-20SL-LW-UNV-L8XX-CD1-U | 2054 | 18 | 109 |
| Full Frost Lens (LW) | Stock | Standard | 4 ft. | 4SNLED-LD4-23SL-LW-UNV-L8XX-CD1-U | 2399 | 22 | 111 |
| Full Frost Lens (LW) | Stock | Standard | 4 ft. | 4SNLED-LD4-27SL-LW-UNV-L8XX-CD1-U | 2732 | 25 | 108 |
| Full Frost Lens (LW) | MTO | Standard | 4 ft. | 4SNLED-LD4-30SL-LW-UNV-L8XX-CD1-U | 3062 | 28 | 106 |
| Full Frost Lens (LW) | MTO | Standard | 4 ft. | 4SNLED-LD4-33SL-LW-UNV-L8XX-CD1-U | 3411 | 32 | 105 |
| Full Frost Lens (LW) | MTO | Standard | 4 ft. | 4SNLED-LD4-37SL-LW-UNV-L8XX-CD1-U | 3778 | 37 | 101 |
| Full Frost Lens (LW) | Stock | Standard | 4 ft. | 4SNLED-LD4-41SL-LW-UNV-L8XX-CD1-U | 4119 | 41 | 100 |
| Full Frost Lens (LW) | MTO | Standard | 4 ft. | 4SNLED-LD4-44SL-LW-UNV-L8XX-CD1-U | 4457 | 46 | 96 |
| Full Frost Lens (LW) | MTO | Standard | 4 ft. | 4SNLED-LD4-47SL-LW-UNV-L8XX-CD1-U | 4781 | 50 | 94 |
| Full Frost Lens (LW) | MTO | Standard | 4 ft. | 4SNLED-LD4-50SL-LW-UNV-L8XX-CD1-U | 5100 | 56 | 89 |
| Full Frost Lens (LW) | MTO | High | 4 ft. | 4SNLED-LD4-54HL-LW-UNV-L8XX-CD1-U | 5458 | 51 | 106 |
| Full Frost Lens (LW) | MTO | Standard | 8 ft. | 8TSNLED-LD4-54SL-LW-UNV-L8XX-CD1-U | 5464 | 50 | 108 |
| Full Frost Lens (LW) | MTO | Standard | 8 ft. | 8TSNLED-LD4-61SL-LW-UNV-L8XX-CD1-U | 6125 | 57 | 107 |
| Full Frost Lens (LW) | Stock | Standard | 8 ft. | 8TSNLED-LD4-67SL-LW-UNV-L8XX-CD1-U | 6822 | 65 | 104 |
| Full Frost Lens (LW) | Stock | Standard | 8 ft. | 8TSNLED-LD4-74SL-LW-UNV-L8XX-CD1-U | 7556 | 73 | 101 |
| Full Frost Lens (LW) | MTO | Standard | 8 ft. | 8TSNLED-LD4-81SL-LW-UNV-L8XX-CD2-U | 8238 | 82 | 99 |
| Full Frost Lens (LW) | MTO | Standard | 8 ft. | 8TSNLED-LD4-88SL-LW-UNV-L8XX-CD2-U | 8915 | 91 | 96 |
| Full Frost Lens (LW) | MTO | Standard | 8 ft. | 8TSNLED-LD4-95SL-LW-UNV-L8XX-CD2-U | 9562 | 100 | 95 |
| Full Frost Lens (LW) | MTO | High | 8 ft. | 8TSNLED-LD4-110HL-LW-UNV-L8XX-CD2-U | 11000 | 130 | 84 |
| Full Frost Lens (LW) | MTO | High | 8 ft. | 8TSNLED-LD4-150HL-LW-UNV-L8XX-CD2-U | 15300 | 140 | 121 |

* Stocked in either 3500K or 4000K

## PHOTOMETRICS

**See website for IES/photometric files**

## LUMEN MAINTENANCE

| Ambient Temperature | TM-21 Lumen Maintenance (12,000 hours) | Theoretical L70 (Hours) |
|---|---|---|
| 25°C | 92.55% | 273,000 |

Max Ambient temp in compliance with CSA: 40°C

## ORDERING INFORMATION

**ALJ-01**
Revision Date:

**SAMPLE NUMBER: 4SNLED-LD4-46SL-LN-UNV-L835-CD1-U**

**2**=2' Length
**4**=4' Length
**8T**=8' Length

**Series**
**SNLED**=Commercial LED Striplight [9]

**Lamp Type**
**LD4**=LED 4.0

**LED Lumens Output** [2]

**Stocked Lumen Packages - LC**
**26SL**=2600 [8]
**30SL**=3000
**46SL**=4600
**75SL**=7500 [14]
**83SL**=8300 [14]

**MTO Lumen Packages - LC**
**18SL**=1800 [8]
**22SL**=2200
**34SL**=3400
**37SL**=3700
**41SL**=4100
**49SL**=4900
**52SL**=5200
**56SL**=5600
**60SL**=6000 [14]
**60HL**=6000 [1], [14]
**68SL**=6800 [14]
**90SL**=9000 [3], [14]
**98SL**=9800 [3], [14]
**105SL**=10,500 [3], [14]
**130HL**=13,000 [3], [12], [14]
**170HL**=17,000 [3], [12], [14]

**Stocked Lumen Packages - LN**
**26SL**=2600 [8]
**30SL**=3000
**32HL**=3200
**46SL**=4600
**75SL**=7500 [14]
**83SL**=8300 [14]

**MTO Lumen Packages - LN**
**18SL**=1800 [8]
**22SL**=2200 [8]
**34SL**=3400
**37SL**=3700
**41SL**=4100
**49SL**=4900
**53SL**=5300
**56SL**=5600
**60SL**=6000
**60HL**=6000 [1], [14]
**68SL**=6800 [14]
**91SL**=9100 [3], [14]
**98SL**=9800 [3], [14]
**106SL**=10,600 [3], [14]
**130HL**=13,000 [3], [14]
**170HL**=17,000 [3], [14]

**Stocked Lumen Packages - LW**
**23SL**=2300 [8]
**27SL**=2700
**41SL**=4100
**67SL**=6700 [14]
**74SL**=7400 [14]

**MTO Lumen Packages - LW**
**16SL**=1600 [8]
**20SL**=2000
**30SL**=3000
**33SL**=3300
**37SL**=3700
**44SL**=4400
**47SL**=4700
**50SL**=5000
**54SL**=5400
**54HL**=5400 [1], [14]
**61SL**=6100 [14]
**81SL**=8100 [3], [14]
**88SL**=8800 [3], [14]
**95SL**=9500 [3], [14]
**110HL**=11,000 [3], [14]
**150HL**=15,300 [3], [14]

**Optic**
**LC**=Clear Lens
**LN**=Semi-Frost Lens - Narrow
**LW**=Full Frost Lens - Wide

**Voltage**
**UNV**=Universal Voltage 120-277
**347**=347V
**480**=480V [4]

**Options**

**Emergency**
**EL7W**=7-watt, 120V-277V emergency battery pack installed [7], [4]
**EL14W**=14-watt 120V-277V emergency battery pack installed [7], [4]
**GTD2**=Bodine Generator Transfer Device [13]
**ETS2**=IOTA Emergency Transfer Switch [13]

**Wiring**
**PI/CPI**=Plug-in Option

**Motion Sensors**
**LB-ERMS360**=360° Low Bay Motion Sensor - End of Row
**LB-MRMS360**=360° Low Bay Motion Sensor - Middle of Row
**HB-ERMS360**=360° High Bay Motion Sensor - End of Row [5]
**HB-MRMS360**=360° High Bay Motion Sensor - Middle of Row [5]

**CCT**
**L830**=3000K
**L835**=3500K
**L840**=4000K
**L850**=5000K

**Driver Type**
**CD**=0-10V Dimming Driver (10% - 100% Dimming)
**HCD**=0-10V Dimming Driver (1% - 100% Dimming) [11]
**SD**=Step-dim (Bi Level) [4], [10]
**5LTD**=Fifth Light (DALI) Driver [4], [6]

**Number of Drivers**
**1**=1 Driver
**2**=2 Drivers

**Packaging**
**U**=Unit Pack

## ACCESSORIES

(Order Separately)
**AYC-Chain/Set**=36" Chain Hanger (Use 1 set per fixture)
**SCF**=Fixed Stem Set (Specify Length)
**SCS**=Swivel Stem Set (Specify Length)
**SCA**=Adjustable 48" Stem Set
**EYE CHAIN SET/3FT**=Eye Bolt Chain (Use 1 set per fixture)
**WG/SNF-2FT**=2' Wire Guard
**WG/SNF-4FT**=4' Wire Guard
**A1B/Spacer-U**=Spacer 1-1/2" to 2-1/2" from ceiling (Use 2 per fixture)
**TOGGLE**=Single Toggle No. 2 (Specify Length)
**Y-TOGGLE**=Y Toggle No. 2 (Specify Length)

**NOTES:** [1] 4 ft. only. [2] Nominal lumen values. [3] Two drivers required. [4] 4 ft. and 8 ft. only. [5] Motion Sensor offers dimmability. [6] For a complete listing of Fifth Light products, visit www.eaton.com/lightingsystems [7] With integral test switch/indicator/laser test. For approximate delivered lumens multiply the lumens per watt of the desired fixture by the wattage of the emergency battery pack (100 lm/W x 7=700 lumens). IES-format photometry for luminaire under emergency operation available. [8] 2 ft. and 4 ft. only. [9] DesignLights Consortium™ Qualified and classified for DLC Standard (all lumen packages), refer to www.designlights.org for details. [10] 4100 lumen and above on 4 ft. and 8200 lumen and above on 8 ft. [11] HCD driver option requires two drivers for 6700 – 10,500 lumens. Not available for 13,000 lumens and above. [12] Not currently listed on DLC QPL. [13] Used to transfer fixture to secondary power source for life-safety operation. When used with a dimming fixture, two devices are required to ensure control is disabled while operating under emergency power. [14] 8 ft. only.

Specifications & dimensions subject to change without notice. Consult your Eaton Representative for availability and ordering information.

## SHIPPING DATA

| Length. | Wt. |
|---|---|
| 2 ft. | 4.3 lbs. |
| 4 ft. | 8.2 lbs. |
| 8 ft. | 15.1 lbs. |

Powering Business Worldwide

**Eaton**
1121 Highway 74 South
Peachtree City, GA 30269
P: 770-486-4800
www.eaton.com/lighting

Specifications and dimensions subject to change without notice.

# Metalux

## DESCRIPTION

SNLED Lensed is a narrow LED lensed striplight series. This high quality luminaire is dedicated to the latest solid state lighting and electronic driver technology for optimal performance and energy efficiency. This Lensed product is available with three different lens types.

The small size of the SNLED makes it an ideal choice for size restricted architectural applications. The SNLED Series can be the illumination solution in commercial, industrial, retail and residential applications. Fixtures can be used in storage/utility areas, coves, display cases, shops, task and general area lighting.

| | | Type |
|---|---|---|
| Catalog # | | ALJ-02 |
| Project | | Revision Date: |
| Comments | | Date |
| Prepared by | | |

## SPECIFICATION FEATURES

**Construction**
Channel is die formed cold rolled steel with numerous KOs for ease of installation. Groove for Tong Hanger. End plate quickly converts to snap-in channel connector for continuous row alignment. Channel/wireway cover secured with sheet metal screws.

**Controls**
Equipped standard with a 0-10V continuous dimming driver that works with any standard 0-10V control/dimmer. Combine with energy saving products like occupancy sensors, day lighting controls, and lighting relay panels to maximize energy savings. For motion control, reference options for both end and middle of the row applications. Standard dimming is 0-10V to 10% with 1%, step and Fifth Light DALI dimming options available.

**Electrical**
Long-Life LED system coupled with electrical driver to deliver optimal performance. LED's available in 3000K, 3500K, 4000K or 5000K with a minimum of 80 CRI. Projected life at 70% lumen maintenance is nearly 170,000 hours with TM21 rating up to L82 >60,000 hours. Electronic drivers are cULus recognized and available for 120-277V, 347V and 480V applications.

**Emergency Battery Pack Option**
Optional 120v-277v integral emergency battery pack is available in 7-watts or 14-watts to meet critical life-safety lighting requirements. The 90-minute batteries provide constant power to the LED system, ensuring code-compliance. A test switch/indicator button can be tested safely from the ground using a laser pointer, while the patented EZ Key prevents accidental discharge of the battery during construction. See ordering information for details.

**Finish**
Multistage iron phosphate pretreatment ensures maximum bonding and rust inhibitor. High reflective paint after fabrication, baked white enamel finish is standard.

**Channel/Wireway Cover**
Die formed heavy gauge steel. Tight fit for ease of maintenance.

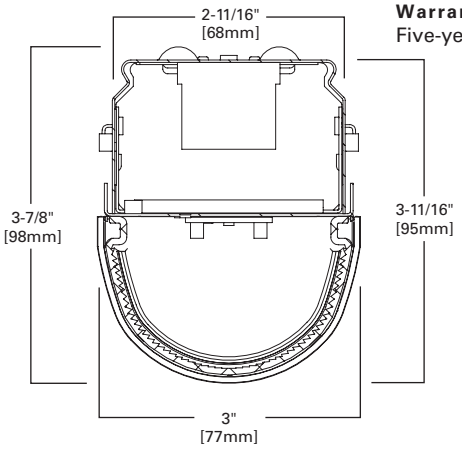


**Shielding**
Offers three different lensed optical distributions. (LC) Clear with linear optical ribs. (LN) Semi-frost for narrow distribution. (LW) Full frost for wide distribution.

**Installation**
Fixture may be surface, pendant, or stem mounted. See accessories below in ordering information.

**Compliance**
Components are UL recognized. Indoor luminaires are cULus listed for 40° C ambient environments, RoHS compliant, damp location listed, and comply with IESNA LM-79. LEDs comply with LM-80 standards. Drivers are NEMA 410 compliant. DesignLights Consortium® Qualified and classified for both DLC Standard and DLC Premium, refer to www.designlights.org for details.

**Warranty**
Five-year warranty.

## MOUNTING DATA

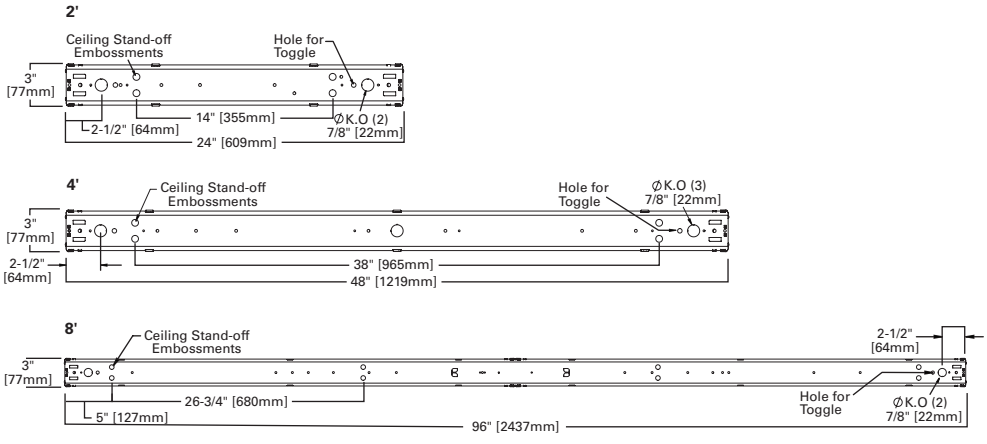

# SNLED LENSED
LED

Lensed LED Striplight

powered by fifthlight technology

LINEAR DISCONNECT
Safe and convenient means of disconnecting power

ISO SYSTEMS CERTIFIED



EATON
Powering Business Worldwide

## WATTAGE

| SNLED Type | Lumen Type | Length | Catalog Number** | Nominal 3500K Lumens | Wattage | lm/W |
|---|---|---|---|---|---|---|
| Clear Lens (LC) | Standard | 2 ft. | 2SNLED-LD5-18SL-LC-UNV-L8XX-CD1-U | 2043 | 15.9 | 128 |
| Clear Lens (LC) | Standard | 2 ft. | 2SNLED-LD5-22SL-LC-UNV-L8XX-CD1-U | 2358 | 17.2 | 137 |
| Clear Lens (LC) | Standard | 2 ft. | 2SNLED-LD5-26SL-LC-UNV-L8XX-CD1-U | 2699 | 20.1 | 134 |
| Clear Lens (LC) | High | 2 ft. | 2SNLED-LD5-34HL-LC-UNV-L8XX-CD1-U | 3442 | 25.8 | 133 |
| Clear Lens (LC) | Standard | 4 ft. | 4SNLED-LD5-18SL-LC-UNV-L8XX-CD1-U | 1955 | 14.6 | 134 |
| Clear Lens (LC) | Standard | 4 ft. | 4SNLED-LD5-22SL-LC-UNV-L8XX-CD1-U | 2382 | 16.0 | 149 |
| Clear Lens (LC) | Standard | 4 ft. | 4SNLED-LD5-26SL-LC-UNV-L8XX-CD1-U | 2826 | 19.3 | 147 |
| Clear Lens (LC) | Standard | 4 ft. | 4SNLED-LD5-30SL-LC-UNV-L8XX-CD1-U | 3199 | 22.1 | 145 |
| Clear Lens (LC) | Standard | 4 ft. | 4SNLED-LD5-34SL-LC-UNV-L8XX-CD1-U | 3567 | 24.9 | 143 |
| Clear Lens (LC) | Standard | 4 ft. | 4SNLED-LD5-37SL-LC-UNV-L8XX-CD1-U | 3914 | 27.7 | 141 |
| Clear Lens (LC) | Standard | 4 ft. | 4SNLED-LD5-41SL-LC-UNV-L8XX-CD1-U | 4261 | 30.6 | 139 |
| Clear Lens (LC) | Standard | 4 ft. | 4SNLED-LD5-46SL-LC-UNV-L8XX-CD1-U | 4708 | 34.6 | 136 |
| Clear Lens (LC) | Standard | 4 ft. | 4SNLED-LD5-49SL-LC-UNV-L8XX-CD1-U | 5139 | 38.7 | 133 |
| Clear Lens (LC) | Standard | 4 ft. | 4SNLED-LD5-52SL-LC-UNV-L8XX-CD1-U | 5551 | 42.8 | 130 |
| Clear Lens (LC) | Standard | 4 ft. | 4SNLED-LD5-56SL-LC-UNV-L8XX-CD1-U | 5950 | 47.1 | 126 |
| Clear Lens (LC) | Standard | 4 ft. | 4SNLED-LD5-63SL-LC-UNV-L8XX-CD1-U | 6340 | 51.5 | 123 |
| Clear Lens (LC) | Standard | 4 ft. | 4SNLED-LD5-66SL-LC-UNV-L8XX-CD1-U | 6603 | 54.9 | 120 |
| Clear Lens (LC) | High | 4 ft. | 4SNLED-LD5-52HL-LC-UNV-L8XX-CD1-U | 5215 | 37.0 | 141 |
| Clear Lens (LC) | High | 4 ft. | 4SNLED-LD5-55HL-LC-UNV-L8XX-CD1-U | 5569 | 40.0 | 139 |
| Clear Lens (LC) | High | 4 ft. | 4SNLED-LD5-60HL-LC-UNV-L8XX-CD1-U | 5920 | 43.0 | 138 |
| Clear Lens (LC) | High | 4 ft. | 4SNLED-LD5-76HL-LC-UNV-L8XX-CD1-U | 7698 | 61.8 | 125 |
| Clear Lens (LC) | Standard | 8 ft. | 8TSNLED-LD5-60SL-LC-UNV-L8XX-CD1-U | 6399 | 44.1 | 145 |
| Clear Lens (LC) | Standard | 8 ft. | 8TSNLED-LD5-68SL-LC-UNV-L8XX-CD1-U | 7134 | 49.7 | 143 |
| Clear Lens (LC) | Standard | 8 ft. | 8TSNLED-LD5-75SL-LC-UNV-L8XX-CD1-U | 7828 | 55.4 | 141 |
| Clear Lens (LC) | Standard | 8 ft. | 8TSNLED-LD5-83SL-LC-UNV-L8XX-CD1-U | 8522 | 61.2 | 139 |
| Clear Lens (LC) | Standard | 8 ft. | 8TSNLED-LD5-90SL-LC-UNV-L8XX-CD1-U | 9415 | 69.2 | 136 |
| Clear Lens (LC) | Standard | 8 ft. | 8TSNLED-LD5-98SL-LC-UNV-L8XX-CD1-U | 10277 | 77.4 | 133 |
| Clear Lens (LC) | Standard | 8 ft. | 8TSNLED-LD5-105SL-LC-UNV-L8XX-CD1-U | 11102 | 85.6 | 130 |
| Clear Lens (LC) | High | 8 ft. | 8TSNLED-LD5-130HL-LC-UNV-L8XX-CD1-U | 11839 | 85.9 | 138 |
| Clear Lens (LC) | High | 8 ft. | 8TSNLED-LD5-170HL-LC-UNV-L8XX-CD2-U | 15396 | 123.6 | 125 |

* Stocked in either 3500K or 4000K. Check Flash for stock availablilty.
** Lumen portion of catalog number may not match actual lumens.


**Eaton**
1121 Highway 74 South
Peachtree City, GA 30269
P: 770-486-4800
www.eaton.com/lighting
Specifications and dimensions subject to change without notice.

## WATTAGE

| SNLED Type | Lumen Type | Length | Catalog Number** | Nominal 3500K Lumens | Wattage | lm/W |
|---|---|---|---|---|---|---|
| Semi-Frost Lens (LN) | Standard | 2 ft. | 2SNLED-LD5-18SL-LN-UNV-L8XX-CD1-U | 1983 | 15.9 | 125 |
| Semi-Frost Lens (LN) | Standard | 2 ft. | 2SNLED-LD5-22SL-LN-UNV-L8XX-CD1-U | 2289 | 17.2 | 133 |
| Semi-Frost Lens (LN) | Standard | 2 ft. | 2SNLED-LD5-26SL-LN-UNV-L8XX-CD1-U | 2620 | 20.1 | 130 |
| Semi-Frost Lens (LN) | High | 2 ft. | 2SNLED-LD5-32HL-LN-UNV-L8XX-CD1-U | 3341 | 25.8 | 130 |
| Semi-Frost Lens (LN) | Standard | 4 ft. | 4SNLED-LD5-18SL-LN-UNV-L8XX-CD1-U | 1898 | 14.6 | 130 |
| Semi-Frost Lens (LN) | Standard | 4 ft. | 4SNLED-LD5-22SL-LN-UNV-L8XX-CD1-U | 2313 | 16.0 | 144 |
| Semi-Frost Lens (LN) | Standard | 4 ft. | 4SNLED-LD5-26SL-LN-UNV-L8XX-CD1-U | 2744 | 19.3 | 142 |
| Semi-Frost Lens (LN) | Standard | 4 ft. | 4SNLED-LD5-30SL-LN-UNV-L8XX-CD1-U | 3106 | 22.1 | 141 |
| Semi-Frost Lens (LN) | Standard | 4 ft. | 4SNLED-LD5-34SL-LN-UNV-L8XX-CD1-U | 3463 | 24.9 | 139 |
| Semi-Frost Lens (LN) | Standard | 4 ft. | 4SNLED-LD5-37SL-LN-UNV-L8XX-CD1-U | 3800 | 27.7 | 137 |
| Semi-Frost Lens (LN) | Standard | 4 ft. | 4SNLED-LD5-41SL-LN-UNV-L8XX-CD1-U | 4137 | 30.6 | 135 |
| Semi-Frost Lens (LN) | Standard | 4 ft. | 4SNLED-LD5-46SL-LN-UNV-L8XX-CD1-U | 4570 | 34.6 | 132 |
| Semi-Frost Lens (LN) | Standard | 4 ft. | 4SNLED-LD5-49SL-LN-UNV-L8XX-CD1-U | 4989 | 38.7 | 129 |
| Semi-Frost Lens (LN) | Standard | 4 ft. | 4SNLED-LD5-53SL-LN-UNV-L8XX-CD1-U | 5389 | 42.8 | 126 |
| Semi-Frost Lens (LN) | Standard | 4 ft. | 4SNLED-LD5-56SL-LN-UNV-L8XX-CD1-U | 5777 | 47.1 | 123 |
| Semi-Frost Lens (LN) | Standard | 4 ft. | 4SNLED-LD5-61SL-LN-UNV-L8XX-CD1-U | 6155 | 51.5 | 120 |
| Semi-Frost Lens (LN) | Standard | 4 ft. | 4SNLED-LD5-64SL-LN-UNV-L8XX-CD1-U | 6410 | 54.9 | 117 |
| Semi-Frost Lens (LN) | High | 4 ft. | 4SNLED-LD5-50HL-LN-UNV-L8XX-CD1-U | 5063 | 37.0 | 137 |
| Semi-Frost Lens (LN) | High | 4 ft. | 4SNLED-LD5-54HL-LN-UNV-L8XX-CD1-U | 5407 | 40.0 | 135 |
| Semi-Frost Lens (LN) | High | 4 ft. | 4SNLED-LD5-60HL-LN-UNV-L8XX-CD1-U | 5747 | 43.0 | 134 |
| Semi-Frost Lens (LN) | High | 4 ft. | 4SNLED-LD5-74HL-LN-UNV-L8XX-CD1-U | 7474 | 61.8 | 121 |
| Semi-Frost Lens (LN) | Standard | 8 ft. | 8TSNLED-LD5-60SL-LN-UNV-L8XX-CD1-U | 6212 | 44.1 | 141 |
| Semi-Frost Lens (LN) | Standard | 8 ft. | 8TSNLED-LD5-68SL-LN-UNV-L8XX-CD1-U | 6926 | 49.7 | 139 |
| Semi-Frost Lens (LN) | Standard | 8 ft. | 8TSNLED-LD5-75SL-LN-UNV-L8XX-CD1-U | 7600 | 55.4 | 137 |
| Semi-Frost Lens (LN) | Standard | 8 ft. | 8TSNLED-LD5-83SL-LN-UNV-L8XX-CD1-U | 8273 | 61.2 | 135 |
| Semi-Frost Lens (LN) | Standard | 8 ft. | 8TSNLED-LD5-91SL-LN-UNV-L8XX-CD1-U | 9141 | 69.2 | 132 |
| Semi-Frost Lens (LN) | Standard | 8 ft. | 8TSNLED-LD5-98SL-LN-UNV-L8XX-CD1-U | 9978 | 77.4 | 129 |
| Semi-Frost Lens (LN) | Standard | 8 ft. | 8TSNLED-LD5-106SL-LN-UNV-L8XX-CD1-U | 10779 | 85.6 | 126 |
| Semi-Frost Lens (LN) | High | 8 ft. | 8TSNLED-LD5-130HL-LN-UNV-L8XX-CD1-U | 11494 | 85.9 | 134 |
| Semi-Frost Lens (LN) | High | 8 ft. | 8TSNLED-LD5-170HL-LN-UNV-L8XX-CD2-U | 14947 | 123.6 | 121 |

* Stocked in either 3500K or 4000K. Check Flash for stock availablilty.
** Lumen portion of catalog number may not match actual lumens.



**Eaton**
1121 Highway 74 South
Peachtree City, GA 30269
P: 770-486-4800
www.eaton.com/lighting

Specifications and dimensions subject to change without notice.

## WATTAGE

| SNLED Type | Lumen Type | Length | Catalog Number** | Nominal 3500K Lumens | Wattage | lm/W |
|---|---|---|---|---|---|---|
| Full Frost Lens (LW) | Standard | 2 ft. | 2SNLED-LD5-16SL-LW-UNV-L8XX-CD1-U | 1825 | 15.9 | 115 |
| Full Frost Lens (LW) | Standard | 2 ft. | 2SNLED-LD5-20SL-LW-UNV-L8XX-CD1-U | 2106 | 17.2 | 122 |
| Full Frost Lens (LW) | Standard | 2 ft. | 2SNLED-LD5-23SL-LW-UNV-L8XX-CD1-U | 2410 | 20.1 | 120 |
| Full Frost Lens (LW) | High | 2 ft. | 2SNLED-LD5-30HL-LW-UNV-L8XX-CD1-U | 2936 | 25.8 | 114 |
| Full Frost Lens (LW) | Standard | 4 ft. | 4SNLED-LD5-16SL-LW-UNV-L8XX-CD1-U | 1746 | 14.6 | 120 |
| Full Frost Lens (LW) | Standard | 4 ft. | 4SNLED-LD5-20SL-LW-UNV-L8XX-CD1-U | 2128 | 16.0 | 133 |
| Full Frost Lens (LW) | Standard | 4 ft. | 4SNLED-LD5-23SL-LW-UNV-L8XX-CD1-U | 2524 | 19.3 | 131 |
| Full Frost Lens (LW) | Standard | 4 ft. | 4SNLED-LD5-27SL-LW-UNV-L8XX-CD1-U | 2857 | 22.1 | 130 |
| Full Frost Lens (LW) | Standard | 4 ft. | 4SNLED-LD5-30SL-LW-UNV-L8XX-CD1-U | 3186 | 24.9 | 128 |
| Full Frost Lens (LW) | Standard | 4 ft. | 4SNLED-LD5-33SL-LW-UNV-L8XX-CD1-U | 3495 | 27.7 | 126 |
| Full Frost Lens (LW) | Standard | 4 ft. | 4SNLED-LD5-37SL-LW-UNV-L8XX-CD1-U | 3805 | 30.6 | 124 |
| Full Frost Lens (LW) | Standard | 4 ft. | 4SNLED-LD5-41SL-LW-UNV-L8XX-CD1-U | 4204 | 34.6 | 122 |
| Full Frost Lens (LW) | Standard | 4 ft. | 4SNLED-LD5-44SL-LW-UNV-L8XX-CD1-U | 4589 | 38.7 | 119 |
| Full Frost Lens (LW) | Standard | 4 ft. | 4SNLED-LD5-47SL-LW-UNV-L8XX-CD1-U | 4958 | 42.8 | 116 |
| Full Frost Lens (LW) | Standard | 4 ft. | 4SNLED-LD5-50SL-LW-UNV-L8XX-CD1-U | 5314 | 47.1 | 113 |
| Full Frost Lens (LW) | Standard | 4 ft. | 4SNLED-LD5-56SL-LW-UNV-L8XX-CD1-U | 5662 | 51.5 | 110 |
| Full Frost Lens (LW) | Standard | 4 ft. | 4SNLED-LD5-58SL-LW-UNV-L8XX-CD1-U | 5897 | 54.9 | 107 |
| Full Frost Lens (LW) | High | 4 ft. | 4SNLED-LD5-44HL-LW-UNV-L8XX-CD1-U | 4449 | 37.0 | 120 |
| Full Frost Lens (LW) | High | 4 ft. | 4SNLED-LD5-48HL-LW-UNV-L8XX-CD1-U | 4751 | 40.0 | 119 |
| Full Frost Lens (LW) | High | 4 ft. | 4SNLED-LD5-54HL-LW-UNV-L8XX-CD1-U | 5051 | 43.0 | 118 |
| Full Frost Lens (LW) | High | 4 ft. | 4SNLED-LD5-65HL-LW-UNV-L8XX-CD1-U | 6568 | 61.8 | 106 |
| Full Frost Lens (LW) | Standard | 8 ft. | 8TSNLED-LD5-54SL-LW-UNV-L8XX-CD1-U | 5715 | 44.1 | 130 |
| Full Frost Lens (LW) | Standard | 8 ft. | 8TSNLED-LD5-61SL-LW-UNV-L8XX-CD1-U | 6371 | 49.7 | 128 |
| Full Frost Lens (LW) | Standard | 8 ft. | 8TSNLED-LD5-67SL-LW-UNV-L8XX-CD1-U | 6991 | 55.4 | 126 |
| Full Frost Lens (LW) | Standard | 8 ft. | 8TSNLED-LD5-74SL-LW-UNV-L8XX-CD1-U | 7611 | 61.2 | 124 |
| Full Frost Lens (LW) | Standard | 8 ft. | 8TSNLED-LD5-81SL-LW-UNV-L8XX-CD1-U | 8409 | 69.2 | 122 |
| Full Frost Lens (LW) | Standard | 8 ft. | 8TSNLED-LD5-88SL-LW-UNV-L8XX-CD1-U | 9179 | 77.4 | 119 |
| Full Frost Lens (LW) | Standard | 8 ft. | 8TSNLED-LD5-95SL-LW-UNV-L8XX-CD1-U | 9916 | 85.6 | 116 |
| Full Frost Lens (LW) | High | 8 ft. | 8TSNLED-LD5-110HL-LW-UNV-L8XX-CD1-U | 10101 | 85.9 | 118 |
| Full Frost Lens (LW) | High | 8 ft. | 8TSNLED-LD5-150HL-LW-UNV-L8XX-CD2-U | 13136 | 123.6 | 106 |

* Stocked in either 3500K or 4000K. Check Flash for stock availablilty.
** Lumen portion of catalog number may not match actual lumens.

## PHOTOMETRICS

**See website for IES/photometric files**

## TYPICAL LUMEN MAINTENANCE

| Ambient Temperature | TM-21 Lumen Maintenance (60,000 hours) | Theoretical L70 (Hours) |
|---|---|---|
| 25°C | > 82% | 170,000 |

Max Ambient temp in compliance with UL and CSA: 40°C



**Eaton**
1121 Highway 74 South
Peachtree City, GA 30269
P: 770-486-4800
www.eaton.com/lighting

Specifications and dimensions subject to change without notice.

## ORDERING INFORMATION

**SAMPLE NUMBER: 4SNLED-LD5-46SL-LN-UNV-L835-CD1-U**

**2**=2' Length
**4**=4' Length
**8T**=8' Length

**Series**
**SNLED**=Commercial LED Striplight [12]

**Lamp Type**
**LD5**=LED 5.0

**LED Lumen Packages** [1]

| LC | LN | LW |
|---|---|---|
| 18SL | 18SL | 16SL |
| 22SL | 22SL | 20SL |
| 26SL | 26SL | 23SL |
| 30SL | 30SL | 27SL |
| 34SL | 32HL | 30SL |
| 34HL | 34SL | 30HL |
| 37SL | 37SL | 33SL |
| 41SL | 41SL | 37SL |
| 46SL | 46SL | 41SL |
| 49SL | 49SL | 44SL |
| 52SL | 50HL | 44HL |
| 55SL | 53SL | 47SL |
| 56SL | 54HL | 48HL |
| 60SL | 56SL | 50SL |
| 60HL | 60SL | 54SL |
| 63SL | 61SL | 54HL |
| 66SL | 60HL | 56SL |
| 68SL | 64SL | 58SL |
| 75SL | 68SL | 61SL |
| 83SL | 74HL | 65HL |
| 90SL | 75SL | 67SL |
| 98SL | 83SL | 74SL |
| 105SL | 91SL | 81SL |
| 130HL | 98SL | 88SL |
| 170HL [2] | 106SL | 95SL |
| | 130HL | 110HL |
| | 170HL [2] | 150HL [2] |

**Optic**
**LC**=Clear Lens
**LN**=Semi-Frost Lens - Narrow
**LW**=Full Frost Lens - Wide

**Voltage**
**UNV**=Universal Voltage 120-277
**347**=347V
**480**=480V [3]

**Options**

**Emergency**
**EL7W**=7-watt, 120V-277V emergency battery pack installed [3], [6]
**EL14W**=14-watt 120V-277V emergency battery pack installed [3], [6]
**GTD2**=Bodine Generator Transfer Device [9]
**ETS2**=IOTA Emergency Transfer Switch [9]

**Wiring**
**PI/CPI**=Plug in and cross over plug in options [11]
**PC6/515P**=(NEMA 5-15P) 6' Cord with NEMA Straight Plug [10], [11]
**PC6/L715**=(NEMA L7-15P) 6' Cord with NEMA Twist Plug [10], [11]

**Motion Sensors**
**LB-ERMS360**=360° Low Bay Motion Sensor - End of Row
**LB-MRMS360**=360° Low Bay Motion Sensor - Middle of Row
**HB-ERMS360**=360° High Bay Motion Sensor - End of Row [4]
**HB-MRMS360**=360° High Bay Motion Sensor - Middle of Row [4]

**CCT**
**L830**=3000K
**L835**=3500K
**L840**=4000K
**L850**=5000K

**Driver Type**
**CD**=0-10V Dimming Driver (10% - 100% Dimming)
**HCD**=0-10V Dimming Driver (1% - 100% Dimming) [8]
**SD**=Step-dim (Bi Level) [3], [7]
**5LTD**=Fifth Light (DALI) Driver [3], [5]

**Number of Drivers**
**1**=1 Driver
**2**=2 Drivers

**Packaging**
**U**=Unit Pack

## ACCESSORIES

(Order Separately)
**AYC-Chain/Set**=36" Chain Hanger (Use 1 set per fixture)
**SCF**=Fixed Stem Set (Specify Length)
**SCS**=Swivel Stem Set (Specify Length)
**SCA**=Adjustable 48" Stem Set
**EYE CHAIN SET/3FT**=Eye Bolt Chain (Use 1 set per fixture)
**WG/SNF-2FT**=2' Wire Guard
**WG/SNF-4FT**=4' Wire Guard
**A1B/Spacer-U**=Spacer 1-1/2" to 2-1/2" from ceiling (Use 2 per fixture)
**TOGGLE**=Single Toggle No. 2 (Specify Length)
**Y-TOGGLE**=Y Toggle No. 2 (Specify Length)

**NOTES:** [1] Nominal lumen values. See table for value and fixture length. [2] Two drivers required. [3] 4 ft. and 8 ft. only. [4] Motion Sensor offers dimmability. [5] Available for 41 watts and above. Two drivers required for 85 watts and above. For a complete listing of Fifth Light products, visit www.eaton.com/lightingsystems [6] With integral test switch/indicator/laser test. For approximate delivered lumens multiply the lumens per watt of the desired fixture by the wattage of the emergency battery pack (100 lm/W x 7=700 lumens). IES-format photometry for luminaire under emergency operation available. [7] Available for 41 Watts and above. Two drivers required for 69 watts and above. [8] Requires two drivers for 61 watts and above. [9] Used to transfer fixture to secondary power source for life-safety operation. When used with a dimming fixture, two devices are required to ensure control is disabled while operating under emergency power. [10] Most common C&P shown. Must specify location for cord. All "end" locations will be on the end with sensor installed. [11] Consult tech support on numerous options for this feature. [12] DesignLights Consortium® Qualified and classified for both DLC Standard and DLC Premium, refer to www.design-lights.org for details.

Specifications & dimensions subject to change without notice. Consult your Eaton Representative for availability and ordering information.

## SHIPPING DATA

| Length. | Wt. |
|---|---|
| 2 ft. | 4.3 lbs. |
| 4 ft. | 8.2 lbs. |
| 8 ft. | 15.1 lbs. |

# Metalux

## DESCRIPTION

SNLED Lensed is a narrow LED lensed striplight series. This high quality luminaire is dedicated to the latest solid state lighting and electronic driver technology for optimal performance and energy efficiency. This Lensed product is available with three different lens types.

The small size of the SNLED makes it an ideal choice for size restricted architectural applications. The SNLED Series can be the illumination solution in commercial, industrial, retail and residential applications. Fixtures can be used in storage/utility areas, coves, display cases, shops, task and general area lighting.

| | | |
|---|---|---|
| **Catalog #** | 4SNLED-LD4-27SL-LW-UNV-L830-CD1-U | **Type** ALJ-03 |
| **Project** | Aloft | Revision Date: |
| **Comments** | | **Date** |
| **Prepared by** | Katheen Kenny, National Accounts, 678-447-5208, kathleenkenny@eaton.com | |

# SNLED LENSED LED

Lensed LED Striplight

powered by fifthlight technology

## SPECIFICATION FEATURES

**Construction**
Channel is die formed cold rolled steel with numerous KOs for ease of installation. Groove for Tong Hanger. End plate quickly converts to snap-in channel connector for continuous row alignment. Channel/wireway cover secured with sheet metal screws.

**Controls**
Equipped standard with a 0-10V continuous dimming driver that works with any standard 0-10V control/dimmer. Dimming range is 10% to 100%; varies by control device. Combine with energy-saving products like occupancy sensors, day lighting controls, and lighting relay panels to maximize energy savings. For motion control, reference options for both end and middle of the row applications.

**Electrical**
Long-Life LED system coupled with electronic (120-277V) driver to deliver optimal lighting performance. LED's available in 3000K, 3500K, 4000K, or 5000K with a CRI ≥ 85. Other color temperatures are available. Projected life is 60,000 + hours at 70% lumen output based on TM21. This driver is 0-10V dimming standard.

**Emergency Battery Pack Option**
Optional 120v-277v integral emergency battery pack is available in 7-watts or 14-watts to meet critical life-safety lighting requirements. The 90-minute batteries provide constant power to the LED system, ensuring code-compliance. A test switch/indicator button can be tested safely from the ground using a laser pointer, while the patented EZ Key prevents accidental discharge of the battery during construction. See ordering information for details.

**Finish**
Multistage iron phosphate pretreatment ensures maximum bonding and rust inhibitor. High reflective paint after fabrication, baked white enamel finish is standard.

**Channel/Wireway Cover**
Die formed heavy gauge steel. Tight fit for ease of maintenance.

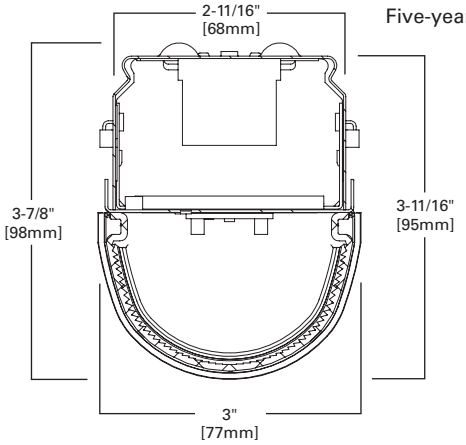


**Shielding**
Offers three different lensed optical distributions. (LC) Clear with linear optical ribs. (LN) Semi-frost for narrow distribution. (LW) Full frost for wide distribution.

**Installation**
Fixture may be surface, pendant, or stem mounted. See accessories below in ordering information.

**Compliance**
Components are UL recognized. Indoor luminaires are cULus listed for 40° C ambient environments, RoHS compliant, damp location listed, and comply with IESNA LM-79. LEDs comply with LM-80 standards. DesignLights Consortium® Qualified. Refer to www.designlights.org Qualified Products List under Family Models for details.

**Warranty**
Five-year warranty.

## MOUNTING DATA

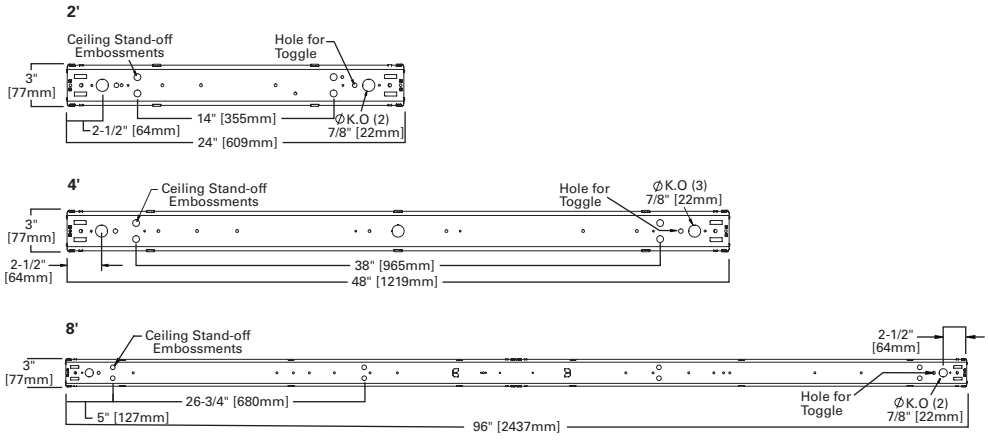


LINEAR DISCONNECT
Safe and convenient means of disconnecting power

Powering Business Worldwide

## WATTAGE

**ALJ-03**
Revision Date:

| SNLED Type | Stock* / MTO | Lumen Type | Length | Catalog Logic | Nominal Lumens | Wattage | lm/W |
|---|---|---|---|---|---|---|---|
| Clear Lens (LC) | MTO | Standard | 2 ft. | 2SNLED-LD4-18SL-LC-UNV-L8XX-CD1-U | 1907 | 17 | 105 |
| Clear Lens (LC) | MTO | Standard | 2 ft. | 2SNLED-LD4-22SL-LC-UNV-L8XX-CD1-U | 2325 | 22 | 101 |
| Clear Lens (LC) | MTO | Standard | 2 ft. | 2SNLED-LD4-26SL-LC-UNV-L8XX-CD1-U | 2712 | 23 | 112 |
| Clear Lens (LC) | MTO | Standard | 4 ft. | 4SNLED-LD4-18SL-LC-UNV-L8XX-CD1-U | 2038 | 16 | 111 |
| Clear Lens (LC) | MTO | Standard | 4 ft. | 4SNLED-LD4-22SL-LC-UNV-L8XX-CD1-U | 2301 | 18 | 120 |
| Clear Lens (LC) | Stock | Standard | 4 ft. | 4SNLED-LD4-26SL-LC-UNV-L8XX-CD1-U | 2688 | 22 | 120 |
| Clear Lens (LC) | Stock | Standard | 4 ft. | 4SNLED-LD4-30SL-LC-UNV-L8XX-CD1-U | 3061 | 25 | 120 |
| Clear Lens (LC) | MTO | Standard | 4 ft. | 4SNLED-LD4-34SL-LC-UNV-L8XX-CD1-U | 3431 | 28 | 120 |
| Clear Lens (LC) | MTO | Standard | 4 ft. | 4SNLED-LD4-37SL-LC-UNV-L8XX-CD1-U | 3822 | 32 | 114 |
| Clear Lens (LC) | MTO | Standard | 4 ft. | 4SNLED-LD4-41SL-LC-UNV-L8XX-CD1-U | 4233 | 37 | 112 |
| Clear Lens (LC) | Stock | Standard | 4 ft. | 4SNLED-LD4-46SL-LC-UNV-L8XX-CD1-U | 4615 | 41 | 112 |
| Clear Lens (LC) | MTO | Standard | 4 ft. | 4SNLED-LD4-49SL-LC-UNV-L8XX-CD1-U | 4994 | 46 | 107 |
| Clear Lens (LC) | MTO | Standard | 4 ft. | 4SNLED-LD4-52SL-LC-UNV-L8XX-CD1-U | 5357 | 50 | 104 |
| Clear Lens (LC) | MTO | Standard | 4 ft. | 4SNLED-LD4-56SL-LC-UNV-L8XX-CD1-U | 5714 | 56 | 99 |
| Clear Lens (LC) | MTO | High | 4 ft. | 4SNLED-LD4-60HL-LC-UNV-L8XX-CD1-U | 6115 | 51 | 118 |
| Clear Lens (LC) | MTO | Standard | 8 ft. | 8TSNLED-LD4-60SL-LC-UNV-L8XX-CD1-U | 6122 | 50 | 120 |
| Clear Lens (LC) | MTO | Standard | 8 ft. | 8TSNLED-LD4-68SL-LC-UNV-L8XX-CD1-U | 6863 | 57 | 120 |
| Clear Lens (LC) | Stock | Standard | 8 ft. | 8TSNLED-LD4-75SL-LC-UNV-L8XX-CD1-U | 7643 | 65 | 116 |
| Clear Lens (LC) | Stock | Standard | 8 ft. | 8TSNLED-LD4-83SL-LC-UNV-L8XX-CD1-U | 8466 | 73 | 113 |
| Clear Lens (LC) | MTO | Standard | 8 ft. | 8TSNLED-LD4-90SL-LC-UNV-L8XX-CD2-U | 9230 | 82 | 110 |
| Clear Lens (LC) | MTO | Standard | 8 ft. | 8TSNLED-LD4-98SL-LC-UNV-L8XX-CD2-U | 9988 | 91 | 107 |
| Clear Lens (LC) | MTO | Standard | 8 ft. | 8TSNLED-LD4-105SL-LC-UNV-L8XX-CD2-U | 10714 | 100 | 105 |
| Clear Lens (LC) | MTO | High | 8 ft. | 8SNLED-LD4-130HL-LC-UNV-L8XX-CD1-U | 13000 | 130 | 100 |
| Clear Lens (LC) | MTO | High | 8 ft. | 8SNLED-LD4-170HL-LC-UNV-L8XX-CD1-U | 17460 | 140 | 125 |

| SNLED Type | Stock* / MTO | Lumen Type | Length | Catalog Logic | Nominal Lumens | Wattage | lm/W |
|---|---|---|---|---|---|---|---|
| Semi-Frost Lens (LN) | MTO | Standard | 2 ft. | 2SNLED-LD4-18SL-LN-UNV-L8XX-CD1-U | 1901 | 17 | 105 |
| Semi-Frost Lens (LN) | MTO | Standard | 2 ft. | 2SNLED-LD4-22SL-LN-UNV-L8XX-CD1-U | 2318 | 22 | 101 |
| Semi-Frost Lens (LN) | MTO | Standard | 2 ft. | 2SNLED-LD4-26SL-LN-UNV-L8XX-CD1-U | 2704 | 23 | 116 |
| Semi-Frost Lens (LN) | MTO | High | 2 ft. | 2SNLED-LD4-32HL-LN-UNV-L8XX-CD1-U | 3200 | 32 | 100 |
| Semi-Frost Lens (LN) | MTO | Standard | 4 ft. | 4SNLED-LD4-18SL-LN-UNV-L8XX-CD1-U | 2032 | 16 | 111 |
| Semi-Frost Lens (LN) | MTO | Standard | 4 ft. | 4SNLED-LD4-22SL-LN-UNV-L8XX-CD1-U | 2294 | 18 | 120 |
| Semi-Frost Lens (LN) | Stock | Standard | 4 ft. | 4SNLED-LD4-26SL-LN-UNV-L8XX-CD1-U | 2680 | 22 | 120 |
| Semi-Frost Lens (LN) | Stock | Standard | 4 ft. | 4SNLED-LD4-30SL-LN-UNV-L8XX-CD1-U | 3052 | 25 | 120 |
| Semi-Frost Lens (LN) | MTO | Standard | 4 ft. | 4SNLED-LD4-34SL-LN-UNV-L8XX-CD1-U | 3421 | 28 | 120 |
| Semi-Frost Lens (LN) | MTO | Standard | 4 ft. | 4SNLED-LD4-37SL-LN-UNV-L8XX-CD1-U | 3810 | 32 | 114 |
| Semi-Frost Lens (LN) | MTO | Standard | 4 ft. | 4SNLED-LD4-41SL-LN-UNV-L8XX-CD1-U | 4220 | 37 | 112 |
| Semi-Frost Lens (LN) | Stock | Standard | 4 ft. | 4SNLED-LD4-46SL-LN-UNV-L8XX-CD1-U | 4601 | 41 | 112 |
| Semi-Frost Lens (LN) | MTO | Standard | 4 ft. | 4SNLED-LD4-49SL-LN-UNV-L8XX-CD1-U | 4979 | 46 | 107 |
| Semi-Frost Lens (LN) | MTO | Standard | 4 ft. | 4SNLED-LD4-53SL-LN-UNV-L8XX-CD1-U | 5341 | 50 | 106 |
| Semi-Frost Lens (LN) | MTO | Standard | 4 ft. | 4SNLED-LD4-56SL-LN-UNV-L8XX-CD1-U | 5697 | 56 | 99 |
| Semi-Frost Lens (LN) | MTO | High | 4 ft. | 4SNLED-LD4-60HL-LN-UNV-L8XX-CD1-U | 6096 | 51 | 118 |
| Semi-Frost Lens (LN) | MTO | Standard | 8 ft. | 8TSNLED-LD4-60SL-LN-UNV-L8XX-CD1-U | 6103 | 50 | 120 |
| Semi-Frost Lens (LN) | MTO | Standard | 8 ft. | 8TSNLED-LD4-68SL-LN-UNV-L8XX-CD1-U | 6842 | 57 | 120 |
| Semi-Frost Lens (LN) | Stock | Standard | 8 ft. | 8TSNLED-LD4-75SL-LN-UNV-L8XX-CD1-U | 7620 | 65 | 116 |
| Semi-Frost Lens (LN) | Stock | Standard | 8 ft. | 8TSNLED-LD4-83SL-LN-UNV-L8XX-CD1-U | 8441 | 73 | 113 |
| Semi-Frost Lens (LN) | MTO | Standard | 8 ft. | 8TSNLED-LD4-91SL-LN-UNV-L8XX-CD2-U | 9202 | 82 | 111 |
| Semi-Frost Lens (LN) | MTO | Standard | 8 ft. | 8TSNLED-LD4-98SL-LN-UNV-L8XX-CD2-U | 9958 | 91 | 107 |
| Semi-Frost Lens (LN) | MTO | Standard | 8 ft. | 8TSNLED-LD4-106SL-LN-UNV-L8XX-CD2-U | 10681 | 100 | 106 |
| Semi-Frost Lens (LN) | MTO | High | 8 ft. | 8TSNLED-LD4-130HL-LN-UNV-L8XX-CD2-U | 13000 | 130 | 100 |
| Semi-Frost Lens (LN) | MTO | High | 8 ft. | 8TSNLED-LD4-170HL-LN-UNV-L8XX-CD2-U | 17100 | 140 | 122 |

## WATTAGE

**ALJ-03**
Revision Date:

| SNLED Type | Stock* / MTO | Lumen Type | Length | Catalog Logic | Nominal Lumens | Wattage | lm/W |
|---|---|---|---|---|---|---|---|
| Full Frost Lens (LW) | MTO | Standard | 2 ft. | 2SNLED-LD4-16SL-LW-UNV-L8XX-CD1-U | 1702 | 17 | 99 |
| Full Frost Lens (LW) | MTO | Standard | 2 ft. | 2SNLED-LD4-20SL-LW-UNV-L8XX-CD1-U | 2075 | 22 | 92 |
| Full Frost Lens (LW) | MTO | Standard | 2 ft. | 2SNLED-LD4-23SL-LW-UNV-L8XX-CD1-U | 2421 | 23 | 104 |
| Full Frost Lens (LW) | MTO | Standard | 4 ft. | 4SNLED-LD4-16SL-LW-UNV-L8XX-CD1-U | 1819 | 16 | 111 |
| Full Frost Lens (LW) | MTO | Standard | 4 ft. | 4SNLED-LD4-20SL-LW-UNV-L8XX-CD1-U | 2054 | 18 | 109 |
| Full Frost Lens (LW) | Stock | Standard | 4 ft. | 4SNLED-LD4-23SL-LW-UNV-L8XX-CD1-U | 2399 | 22 | 111 |
| Full Frost Lens (LW) | Stock | Standard | 4 ft. | 4SNLED-LD4-27SL-LW-UNV-L8XX-CD1-U | 2732 | 25 | 108 |
| Full Frost Lens (LW) | MTO | Standard | 4 ft. | 4SNLED-LD4-30SL-LW-UNV-L8XX-CD1-U | 3062 | 28 | 106 |
| Full Frost Lens (LW) | MTO | Standard | 4 ft. | 4SNLED-LD4-33SL-LW-UNV-L8XX-CD1-U | 3411 | 32 | 105 |
| Full Frost Lens (LW) | MTO | Standard | 4 ft. | 4SNLED-LD4-37SL-LW-UNV-L8XX-CD1-U | 3778 | 37 | 101 |
| Full Frost Lens (LW) | Stock | Standard | 4 ft. | 4SNLED-LD4-41SL-LW-UNV-L8XX-CD1-U | 4119 | 41 | 100 |
| Full Frost Lens (LW) | MTO | Standard | 4 ft. | 4SNLED-LD4-44SL-LW-UNV-L8XX-CD1-U | 4457 | 46 | 96 |
| Full Frost Lens (LW) | MTO | Standard | 4 ft. | 4SNLED-LD4-47SL-LW-UNV-L8XX-CD1-U | 4781 | 50 | 94 |
| Full Frost Lens (LW) | MTO | Standard | 4 ft. | 4SNLED-LD4-50SL-LW-UNV-L8XX-CD1-U | 5100 | 56 | 89 |
| Full Frost Lens (LW) | MTO | High | 4 ft. | 4SNLED-LD4-54HL-LW-UNV-L8XX-CD1-U | 5458 | 51 | 106 |
| Full Frost Lens (LW) | MTO | Standard | 8 ft. | 8TSNLED-LD4-54SL-LW-UNV-L8XX-CD1-U | 5464 | 50 | 108 |
| Full Frost Lens (LW) | MTO | Standard | 8 ft. | 8TSNLED-LD4-61SL-LW-UNV-L8XX-CD1-U | 6125 | 57 | 107 |
| Full Frost Lens (LW) | Stock | Standard | 8 ft. | 8TSNLED-LD4-67SL-LW-UNV-L8XX-CD1-U | 6822 | 65 | 104 |
| Full Frost Lens (LW) | Stock | Standard | 8 ft. | 8TSNLED-LD4-74SL-LW-UNV-L8XX-CD1-U | 7556 | 73 | 101 |
| Full Frost Lens (LW) | MTO | Standard | 8 ft. | 8TSNLED-LD4-81SL-LW-UNV-L8XX-CD2-U | 8238 | 82 | 99 |
| Full Frost Lens (LW) | MTO | Standard | 8 ft. | 8TSNLED-LD4-88SL-LW-UNV-L8XX-CD2-U | 8915 | 91 | 96 |
| Full Frost Lens (LW) | MTO | Standard | 8 ft. | 8TSNLED-LD4-95SL-LW-UNV-L8XX-CD2-U | 9562 | 100 | 95 |
| Full Frost Lens (LW) | MTO | High | 8 ft. | 8TSNLED-LD4-110HL-LW-UNV-L8XX-CD2-U | 11000 | 130 | 84 |
| Full Frost Lens (LW) | MTO | High | 8 ft. | 8TSNLED-LD4-150HL-LW-UNV-L8XX-CD2-U | 15300 | 140 | 121 |

* Stocked in either 3500K or 4000K

## PHOTOMETRICS

**See website for IES/photometric files**

## LUMEN MAINTENANCE

| Ambient Temperature | TM-21 Lumen Maintenance (12,000 hours) | Theoretical L70 (Hours) |
|---|---|---|
| 25°C | 92.55% | 273,000 |

Max Ambient temp in compliance with CSA: 40°C

## ORDERING INFORMATION

**ALJ-03**
Revision Date:

**SAMPLE NUMBER: 4SNLED-LD4-46SL-LN-UNV-L835-CD1-U**

**2**=2' Length
**4**=4' Length
**8T**=8' Length

**Series**
**SNLED**=Commercial LED Striplight [9]

**Lamp Type**
**LD4**=LED 4.0

**LED Lumens Output** [2]

**Stocked Lumen Packages - LC**
**26SL**=2600 [8]
**30SL**=3000
**46SL**=4600
**75SL**=7500 [14]
**83SL**=8300 [14]

**MTO Lumen Packages - LC**
**18SL**=1800 [8]
**22SL**=2200
**34SL**=3400
**37SL**=3700
**41SL**=4100
**49SL**=4900
**52SL**=5200
**56SL**=5600
**60SL**=6000 [14]
**60HL**=6000 [1], [14]
**68SL**=6800 [14]
**90SL**=9000 [3], [14]
**98SL**=9800 [3], [14]
**105SL**=10,500 [3], [14]
**130HL**=13,000 [3], [12], [14]
**170HL**=17,000 [3], [12], [14]

**Stocked Lumen Packages - LN**
**26SL**=2600 [8]
**30SL**=3000
**32HL**=3200
**46SL**=4600
**75SL**=7500 [14]
**83SL**=8300 [14]

**MTO Lumen Packages - LN**
**18SL**=1800 [8]
**22SL**=2200 [8]
**34SL**=3400
**37SL**=3700
**41SL**=4100
**49SL**=4900
**53SL**=5300
**56SL**=5600
**60SL**=6000
**60HL**=6000 [1], [14]
**68SL**=6800 [14]
**91SL**=9100 [3], [14]
**98SL**=9800 [3], [14]
**106SL**=10,600 [3], [14]
**130HL**=13,000 [3], [14]
**170HL**=17,000 [3], [14]

**Stocked Lumen Packages - LW**
**23SL**=2300 [8]
**27SL**=2700
**41SL**=4100
**67SL**=6700 [14]
**74SL**=7400 [14]

**MTO Lumen Packages - LW**
**16SL**=1600 [8]
**20SL**=2000
**30SL**=3000
**33SL**=3300
**37SL**=3700
**44SL**=4400
**47SL**=4700
**50SL**=5000
**54SL**=5400
**54HL**=5400 [1], [14]
**61SL**=6100 [14]
**81SL**=8100 [3], [14]
**88SL**=8800 [3], [14]
**95SL**=9500 [3], [14]
**110HL**=11,000 [3], [14]
**150HL**=15,300 [3], [14]

**Optic**
**LC**=Clear Lens
**LN**=Semi-Frost Lens - Narrow
**LW**=Full Frost Lens - Wide

**Voltage**
**UNV**=Universal Voltage 120-277
**347**=347V
**480**=480V [4]

**Options**

**Emergency**
**EL7W**=7-watt, 120V-277V emergency battery pack installed [7], [4]
**EL14W**=14-watt 120V-277V emergency battery pack installed [7], [4]
**GTD2**=Bodine Generator Transfer Device [13]
**ETS2**=IOTA Emergency Transfer Switch [13]

**Wiring**
**PI/CPI**=Plug-in Option

**Motion Sensors**
**LB-ERMS360**=360° Low Bay Motion Sensor - End of Row
**LB-MRMS360**=360° Low Bay Motion Sensor - Middle of Row
**HB-ERMS360**=360° High Bay Motion Sensor - End of Row [5]
**HB-MRMS360**=360° High Bay Motion Sensor - Middle of Row [5]

**CCT**
**L830**=3000K
**L835**=3500K
**L840**=4000K
**L850**=5000K

**Driver Type**
**CD**=0-10V Dimming Driver (10% - 100% Dimming)
**HCD**=0-10V Dimming Driver (1% - 100% Dimming) [11]
**SD**=Step-dim (Bi Level) [4], [10]
**5LTD**=Fifth Light (DALI) Driver [4], [6]

**Number of Drivers**
**1**=1 Driver
**2**=2 Drivers

**Packaging**
**U**=Unit Pack

## ACCESSORIES

(Order Separately)
**AYC-Chain/Set**=36" Chain Hanger (Use 1 set per fixture)
**SCF**=Fixed Stem Set (Specify Length)
**SCS**=Swivel Stem Set (Specify Length)
**SCA**=Adjustable 48" Stem Set
**EYE CHAIN SET/3FT**=Eye Bolt Chain (Use 1 set per fixture)
**WG/SNF-2FT**=2' Wire Guard
**WG/SNF-4FT**=4' Wire Guard
**A1B/Spacer-U**=Spacer 1-1/2" to 2-1/2" from ceiling (Use 2 per fixture)
**TOGGLE**=Single Toggle No. 2 (Specify Length)
**Y-TOGGLE**=Y Toggle No. 2 (Specify Length)

**NOTES:** [1] 4 ft. only. [2] Nominal lumen values. [3] Two drivers required. [4] 4 ft. and 8 ft. only. [5] Motion Sensor offers dimmability. [6] For a complete listing of Fifth Light products, visit www.eaton.com/lightingsystems [7] With integral test switch/indicator/laser test. For approximate delivered lumens multiply the lumens per watt of the desired fixture by the wattage of the emergency battery pack (100 lm/W x 7=700 lumens). IES-format photometry for luminaire under emergency operation available. [8] 2 ft. and 4 ft. only. [9] DesignLights Consortium™ Qualified and classified for DLC Standard (all lumen packages), refer to www.designlights.org for details. [10] 4100 lumen and above on 4 ft. and 8200 lumen and above on 8 ft. [11] HCD driver option requires two drivers for 6700 – 10,500 lumens. Not available for 13,000 lumens and above. [12] Not currently listed on DLC QPL. [13] Used to transfer fixture to secondary power source for life-safety operation. When used with a dimming fixture, two devices are required to ensure control is disabled while operating under emergency power. [14] 8 ft. only.

Specifications & dimensions subject to change without notice. Consult your Eaton Representative for availability and ordering information.

## SHIPPING DATA

| Length. | Wt. |
|---|---|
| 2 ft. | 4.3 lbs. |
| 4 ft. | 8.2 lbs. |
| 8 ft. | 15.1 lbs. |

Powering Business Worldwide

**Eaton**
1121 Highway 74 South
Peachtree City, GA 30269
P: 770-486-4800
www.eaton.com/lighting

Specifications and dimensions subject to change without notice.

# Metalux AP Series

## DESCRIPTION

The SLSTP is a low profile, high quality luminaire offering the latest solid state lighting and electronic driver technology that optimizes performance and energy efficiency. With the SLSTP's low profile design, this series is an ideal solution for restricted spaces and meets traditional requirements for single or continuous row applications.

The SLSTP is an excellent solution for commercial, industrial, retail or residential applications. Ideal for new construction or simple fluorescent retrofit replacement.

| | | |
|---|---|---|
| **Catalog #** | 2SLSTP2035DD-UNV | **Type** |
| **Project** | ALOFT | |
| **Comments** | | **Date** |
| **Prepared by** | K.KENNY,678-447-5208, KATHLEENKENNY@EATOM.COM, | ALJ-04a<br>Revision Date: |

## SPECIFICATION FEATURES

**Construction**
Fixture channel, cover and end plates are formed from cold rolled steel and offers all of the features needed for installation including multiple KO, a round J-box cover, wiring connectors and decorative end caps. The SLSTP is post painted for ease of handling. Decorative end caps snap-on for an improved aesthetic finish. The SLSTP is suitable for either single or continuous row applications.

**Controls**
Combine with energy saving products like occupancy sensors, daylighting controls, and lighting relay panels to maximize energy savings. Standard 0-10V continuous dimming driver works with any standard 0-10V control/ dimmer. Dimming range is 10% to 100% and varies by control device. 120V drivers work with standard 120V phase cut dimmers. See dimming compatability chart posted on website. Optional simple occupancy sensors enable code compliance all in a simple package.

**Electrical**
Long-Life LED system with an energy-efficient electronic driver comes in UNV (120-277V) or 120V versions. Both drivers offer smooth dimming with a number of residential and commercial dimmers. LED's CCT are 3500K and 4000K with a CRI ≥ 80. Projected life is 50,000 hours at 70% lumen output.

**Finish**
Post painted with high reflective paint – standard.

**Shielding**
SLSTP offers a frost lens with decorative end caps for single and end of the row applications.

**Installation**
Fixture may be surface, suspended, or wall mounted. Multiple 7/8" K.O. on back and one on each end. See accessories below for ordering information.

**Compliance**
cULus listed for damp location rated. LED's comply with IESNA LM-79 and LM-80 standards. Under 4", ADA Compliant. DesignLights Consortium® Qualified and classified for DLC Standard, refer to www.designlights.org for details. RoHS compliant. Suitable for use in clothes closets when installed in accordance with the NEC 410.16 spacing requirements.

**Warranty**
Five-year warranty.

## SLSTP LENSED LED

Lensed LED Striplight

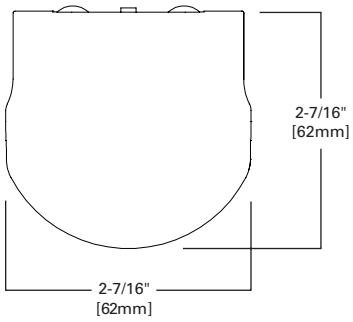


WITH ENDCAP INSTALLED

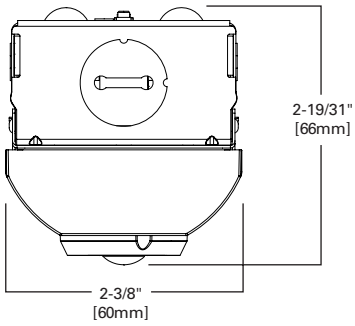


WITH SENSOR – NO ENDCAP INSTALLED

## MOUNTING DATA (SHOWN WITH ENDCAPS)

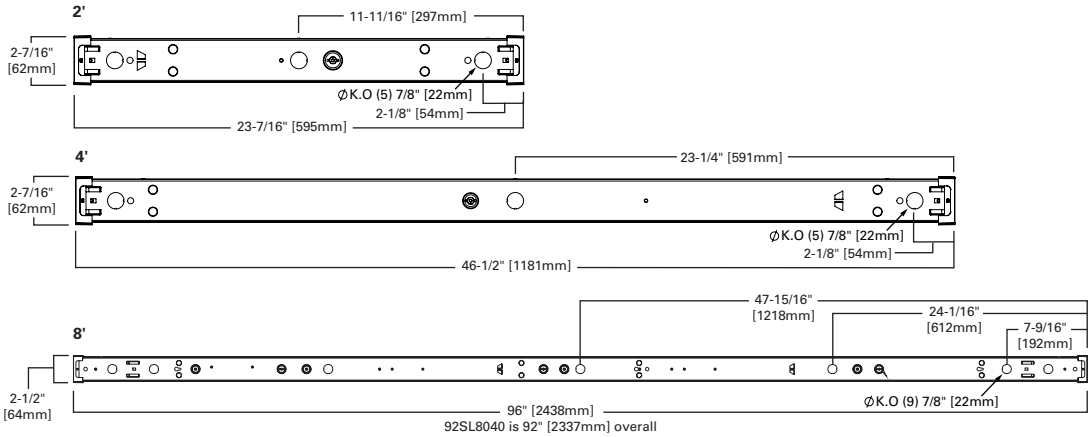


## LOAD DATA

| | 2' | 4' | 8' |
|---|---|---|---|
| PF | 0.99 | 0.99 | 0.98 |
| THD% | 13.6 | 12.9 | < 20 |
| Weight | 2.8 | 4.6 | 9 |
| Low Temp Start | -20C | -20C | -20C |

**LINEAR DISCONNECT**
Safe and convenient means of disconnecting power

Powering Business Worldwide

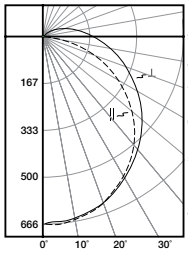


## 4SLSTP2040DD-UNV

Electronic Driver

Linear LED 4000K

Spacing criterion: (II) 1.26 x mounting height, (⊥) 1.29 x mounting height

Lumens: 2410

Input Watts: 21.3W

Efficacy:113.1 lm/W

Test Report: 4SLSTP2040DD-UNV.IES

### Candlepower

| Angle | Along II | 45° | Across ⊥ |
|---|---|---|---|
| 0 | 661 | 661 | 661 |
| 5 | 663 | 664 | 655 |
| 10 | 655 | 657 | 648 |
| 15 | 639 | 644 | 637 |
| 20 | 618 | 627 | 620 |
| 25 | 592 | 603 | 598 |
| 30 | 563 | 576 | 572 |
| 35 | 528 | 544 | 544 |
| 40 | 488 | 506 | 513 |
| 45 | 445 | 467 | 481 |
| 50 | 399 | 426 | 446 |
| 55 | 349 | 383 | 411 |
| 60 | 297 | 340 | 374 |
| 65 | 241 | 296 | 338 |
| 70 | 180 | 253 | 302 |
| 75 | 121 | 209 | 266 |
| 80 | 65 | 172 | 233 |
| 85 | 21 | 140 | 199 |
| 90 | 0 | 111 | 169 |

### Coefficients of Utilization

Effective floor cavity reflectance 20%

| rc | 80% | | | | 70% | | | | 50% | | | 30% | | | 10% | | | 0% |
|---|---|---|---|---|---|---|---|---|---|---|---|---|---|---|---|---|---|---|
| rw | 70 | 50 | 30 | 10 | 70 | 50 | 30 | 10 | 50 | 30 | 10 | 50 | 30 | 10 | 50 | 30 | 10 | 0 |
| RCR | | | | | | | | | | | | | | | | | | |
| 0 | 117 | 117 | 117 | 117 | 113 | 113 | 113 | 113 | 106 | 106 | 106 | 100 | 100 | 100 | 94 | 94 | 94 | 91 |
| 1 | 105 | 99 | 94 | 89 | 101 | 96 | 91 | 87 | 90 | 86 | 83 | 84 | 81 | 78 | 79 | 77 | 75 | 72 |
| 2 | 94 | 85 | 78 | 71 | 91 | 82 | 76 | 70 | 77 | 72 | 67 | 73 | 68 | 64 | 68 | 64 | 61 | 58 |
| 3 | 86 | 74 | 65 | 58 | 82 | 72 | 64 | 57 | 68 | 61 | 55 | 64 | 58 | 53 | 60 | 55 | 51 | 48 |
| 4 | 78 | 65 | 56 | 49 | 75 | 63 | 55 | 48 | 60 | 52 | 46 | 56 | 50 | 45 | 53 | 48 | 43 | 41 |
| 5 | 72 | 58 | 49 | 42 | 69 | 56 | 48 | 41 | 53 | 46 | 40 | 50 | 44 | 39 | 48 | 42 | 37 | 35 |
| 6 | 66 | 52 | 43 | 36 | 63 | 51 | 42 | 36 | 48 | 40 | 35 | 45 | 39 | 34 | 43 | 37 | 33 | 30 |
| 7 | 61 | 47 | 38 | 32 | 59 | 46 | 37 | 31 | 44 | 36 | 31 | 41 | 35 | 30 | 39 | 33 | 29 | 27 |
| 8 | 57 | 43 | 34 | 28 | 55 | 42 | 34 | 28 | 40 | 32 | 27 | 38 | 31 | 26 | 36 | 30 | 26 | 24 |
| 9 | 53 | 39 | 31 | 25 | 51 | 38 | 30 | 25 | 37 | 29 | 24 | 35 | 28 | 24 | 33 | 27 | 23 | 21 |
| 10 | 50 | 36 | 28 | 23 | 48 | 35 | 28 | 23 | 34 | 27 | 22 | 32 | 26 | 22 | 31 | 25 | 21 | 19 |

### Zonal Lumen Summary

| Zone | Lumens | % Fixture |
|---|---|---|
| 0-30 | 518 | 21.5 |
| 0-40 | 854 | 35.4 |
| 0-60 | 1551 | 64.3 |
| 0-90 | 2193 | 91.0 |
| 0-180 | 2410 | 100.0 |

### Luminance Data

| Angle in Deg | Average 0-Deg cd/sm | Average 45-Deg cd/sm | Average 90-Deg cd/sm |
|---|---|---|---|
| 45 | 9755 | 6140 | 5491 |
| 55 | 9272 | 5254 | 4765 |
| 65 | 8452 | 4384 | 4107 |
| 75 | 6532 | 3478 | 3507 |
| 85 | 2635 | 2754 | 2966 |

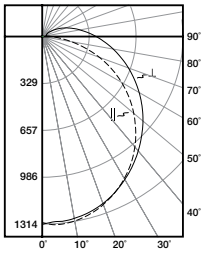


## 4SLSTP4040DD-UNV

Electronic Driver

Linear LED 4000K

Spacing criterion: (II) 1.27 x mounting height, (⊥) 1.29 x mounting height

Lumens: 4760

Input Watts: 43.5W

Efficacy: 109.4 lm/W

Test Report: 4SLSTP4040DD-UNV.IES

### Candlepower

| Angle | Along II | 45° | Across ⊥ |
|---|---|---|---|
| 0 | 1307 | 1307 | 1307 |
| 5 | 1316 | 1304 | 1297 |
| 10 | 1300 | 1289 | 1282 |
| 15 | 1271 | 1264 | 1258 |
| 20 | 1229 | 1229 | 1224 |
| 25 | 1178 | 1183 | 1179 |
| 30 | 1117 | 1128 | 1128 |
| 35 | 1048 | 1062 | 1072 |
| 40 | 969 | 991 | 1011 |
| 45 | 880 | 913 | 947 |
| 50 | 789 | 833 | 882 |
| 55 | 689 | 748 | 812 |
| 60 | 586 | 666 | 741 |
| 65 | 475 | 581 | 670 |
| 70 | 358 | 497 | 600 |
| 75 | 240 | 417 | 530 |
| 80 | 128 | 344 | 464 |
| 85 | 41 | 280 | 401 |
| 90 | 1 | 222 | 343 |

### Coefficients of Utilization

Effective floor cavity reflectance 20%

| rc | 80% | | | | 70% | | | | 50% | | | 30% | | | 10% | | | 0% |
|---|---|---|---|---|---|---|---|---|---|---|---|---|---|---|---|---|---|---|
| rw | 70 | 50 | 30 | 10 | 70 | 50 | 30 | 10 | 50 | 30 | 10 | 50 | 30 | 10 | 50 | 30 | 10 | 0 |
| RCR | | | | | | | | | | | | | | | | | | |
| 0 | 117 | 117 | 117 | 117 | 113 | 113 | 113 | 113 | 106 | 106 | 106 | 100 | 100 | 100 | 94 | 94 | 94 | 91 |
| 1 | 105 | 99 | 94 | 89 | 101 | 96 | 91 | 87 | 90 | 86 | 83 | 84 | 81 | 78 | 79 | 77 | 74 | 72 |
| 2 | 94 | 85 | 78 | 71 | 91 | 82 | 75 | 70 | 77 | 72 | 67 | 73 | 68 | 64 | 68 | 64 | 61 | 58 |
| 3 | 86 | 74 | 65 | 58 | 82 | 72 | 64 | 57 | 67 | 61 | 55 | 63 | 58 | 53 | 60 | 55 | 51 | 48 |
| 4 | 78 | 65 | 56 | 49 | 75 | 63 | 55 | 48 | 60 | 52 | 46 | 56 | 50 | 45 | 53 | 48 | 43 | 41 |
| 5 | 72 | 58 | 49 | 42 | 69 | 56 | 48 | 41 | 53 | 46 | 40 | 50 | 44 | 39 | 47 | 42 | 37 | 35 |
| 6 | 66 | 52 | 43 | 36 | 63 | 51 | 42 | 36 | 48 | 40 | 35 | 45 | 39 | 34 | 43 | 37 | 33 | 30 |
| 7 | 61 | 47 | 38 | 32 | 59 | 46 | 37 | 31 | 43 | 36 | 30 | 41 | 35 | 30 | 39 | 33 | 29 | 27 |
| 8 | 57 | 43 | 34 | 28 | 55 | 42 | 34 | 28 | 40 | 32 | 27 | 38 | 31 | 26 | 36 | 30 | 26 | 24 |
| 9 | 53 | 39 | 31 | 25 | 51 | 38 | 30 | 25 | 37 | 29 | 24 | 35 | 28 | 24 | 33 | 27 | 23 | 21 |
| 10 | 50 | 36 | 28 | 23 | 48 | 35 | 28 | 23 | 34 | 27 | 22 | 32 | 26 | 22 | 31 | 25 | 21 | 19 |

### Zonal Lumen Summary

| Zone | Lumens | % Fixture |
|---|---|---|
| 0-30 | 1021 | 21.5 |
| 0-40 | 1682 | 35.3 |
| 0-60 | 3053 | 64.1 |
| 0-90 | 4328 | 90.9 |
| 0-180 | 4760 | 100.0 |

### Luminance Data

| Angle in Deg | Average 0-Deg cd/sm | Average 45-Deg cd/sm | Average 90-Deg cd/sm |
|---|---|---|---|
| 45 | 20094 | 12212 | 10812 |
| 55 | 19395 | 10476 | 9413 |
| 65 | 18147 | 8821 | 8140 |
| 75 | 14972 | 7149 | 6987 |
| 85 | 7595 | 5711 | 5976 |

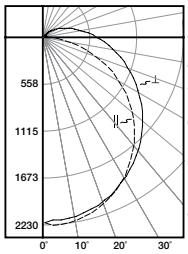


## 8SLSTP8040DD-UNV

Electronic Driver

Linear LED 4000K

Spacing criterion: (II) 1.28 x mounting height, (⊥) 1.30 x mounting height

Lumens: 8176

Input Watts: 71W

Efficacy:115 lm/W

Test Report: 8SLSTP8040DD-UNV.IES

### Candlepower

| Angle | Along II | 45° | Across ⊥ |
|---|---|---|---|
| 0 | 2200 | 2200 | 2200 |
| 5 | 2226 | 2188 | 2174 |
| 10 | 2200 | 2164 | 2151 |
| 15 | 2151 | 2123 | 2115 |
| 20 | 2082 | 2064 | 2060 |
| 25 | 1995 | 1989 | 1991 |
| 30 | 1892 | 1898 | 1912 |
| 35 | 1770 | 1789 | 1819 |
| 40 | 1638 | 1673 | 1722 |
| 45 | 1490 | 1543 | 1618 |
| 50 | 1330 | 1407 | 1507 |
| 55 | 1166 | 1271 | 1391 |
| 60 | 987 | 1129 | 1271 |
| 65 | 801 | 990 | 1154 |
| 70 | 604 | 850 | 1038 |
| 75 | 401 | 718 | 923 |
| 80 | 219 | 598 | 813 |
| 85 | 71 | 491 | 708 |
| 90 | 4 | 389 | 606 |

### Coefficients of Utilization

Effective floor cavity reflectance 20%

| rc | 80% | | | | 70% | | | | 50% | | | 30% | | | 10% | | | 0% |
|---|---|---|---|---|---|---|---|---|---|---|---|---|---|---|---|---|---|---|
| rw | 70 | 50 | 30 | 10 | 70 | 50 | 30 | 10 | 50 | 30 | 10 | 50 | 30 | 10 | 50 | 30 | 10 | 0 |
| RCR | | | | | | | | | | | | | | | | | | |
| 0 | 117 | 117 | 117 | 117 | 113 | 113 | 113 | 113 | 106 | 106 | 106 | 99 | 99 | 99 | 93 | 93 | 93 | 90 |
| 1 | 104 | 99 | 94 | 89 | 100 | 95 | 91 | 87 | 89 | 85 | 82 | 83 | 80 | 78 | 78 | 76 | 74 | 71 |
| 2 | 94 | 85 | 77 | 71 | 90 | 82 | 75 | 69 | 77 | 71 | 66 | 72 | 67 | 63 | 67 | 64 | 60 | 57 |
| 3 | 85 | 74 | 65 | 58 | 82 | 71 | 63 | 57 | 67 | 60 | 55 | 63 | 57 | 52 | 59 | 54 | 50 | 47 |
| 4 | 78 | 65 | 56 | 49 | 75 | 63 | 54 | 48 | 59 | 52 | 46 | 56 | 49 | 44 | 52 | 47 | 43 | 40 |
| 5 | 71 | 58 | 48 | 42 | 68 | 56 | 47 | 41 | 53 | 45 | 39 | 50 | 43 | 38 | 47 | 41 | 37 | 34 |
| 6 | 66 | 52 | 43 | 36 | 63 | 50 | 42 | 35 | 48 | 40 | 34 | 45 | 38 | 33 | 42 | 37 | 32 | 30 |
| 7 | 61 | 47 | 38 | 32 | 58 | 46 | 37 | 31 | 43 | 36 | 30 | 41 | 34 | 29 | 39 | 33 | 28 | 26 |
| 8 | 57 | 43 | 34 | 28 | 54 | 42 | 33 | 28 | 39 | 32 | 27 | 37 | 31 | 26 | 35 | 30 | 25 | 23 |
| 9 | 53 | 39 | 31 | 25 | 51 | 38 | 30 | 25 | 36 | 29 | 24 | 34 | 28 | 23 | 33 | 27 | 23 | 21 |
| 10 | 49 | 36 | 28 | 23 | 48 | 35 | 28 | 22 | 33 | 27 | 22 | 32 | 26 | 21 | 30 | 25 | 21 | 19 |

### Zonal Lumen Summary

| Zone | Lumens | % Fixture |
|---|---|---|
| 0-30 | 1724 | 21.1 |
| 0-40 | 2842 | 34.8 |
| 0-60 | 5168 | 63.2 |
| 0-90 | 7359 | 90.0 |
| 0-180 | 8176 | 100.0 |

### Luminance Data

| Angle in Deg | Average 0-Deg cd/sm | Average 45-Deg cd/sm | Average 90-Deg cd/sm |
|---|---|---|---|
| 45 | 16652 | 10222 | 9228 |
| 55 | 15921 | 8802 | 8055 |
| 65 | 14631 | 7411 | 7002 |
| 75 | 11606 | 6055 | 6076 |
| 85 | 5307 | 4909 | 5268 |

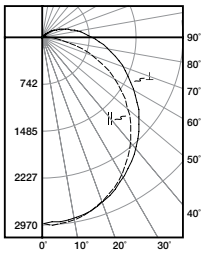


## 8SLSTP11040DD-UNV

Electronic Driver

Linear LED 4000K

Spacing criterion: (II) 1.26 x mounting height, (⊥) 1.28 x mounting height

Lumens: 10476

Input Watts: 83.4W

Efficacy: 126 lm/W

Test Report: 8SLSTP11040DD-UNV.IES

### Candlepower

| Angle | Along II | 45° | Across ⊥ |
|---|---|---|---|
| 0 | 2941 | 2941 | 2941 |
| 5 | 2957 | 2913 | 2925 |
| 10 | 2913 | 2876 | 2888 |
| 15 | 2838 | 2819 | 2934 |
| 20 | 2740 | 2736 | 2750 |
| 25 | 2612 | 2626 | 2643 |
| 30 | 2470 | 2499 | 2523 |
| 35 | 2302 | 2349 | 2391 |
| 40 | 2123 | 2186 | 2255 |
| 45 | 1922 | 2008 | 2101 |
| 50 | 1713 | 1825 | 1949 |
| 55 | 1494 | 1636 | 1792 |
| 60 | 1265 | 1451 | 1628 |
| 65 | 1021 | 1263 | 1464 |
| 70 | 769 | 1076 | 1309 |
| 75 | 514 | 905 | 1155 |
| 80 | 272 | 747 | 1011 |
| 85 | 83 | 609 | 875 |
| 90 | 2 | 485 | 747 |

### Coefficients of Utilization

Effective floor cavity reflectance 20%

| rc | 80% | | | | 70% | | | | 50% | | | 30% | | | 10% | | | 0% |
|---|---|---|---|---|---|---|---|---|---|---|---|---|---|---|---|---|---|---|
| rw | 70 | 50 | 30 | 10 | 70 | 50 | 30 | 10 | 50 | 30 | 10 | 50 | 30 | 10 | 50 | 30 | 10 | 0 |
| RCR | | | | | | | | | | | | | | | | | | |
| 0 | 117 | 117 | 117 | 117 | 113 | 113 | 113 | 113 | 106 | 106 | 106 | 100 | 100 | 100 | 94 | 94 | 94 | 91 |
| 1 | 105 | 99 | 94 | 89 | 101 | 96 | 91 | 87 | 90 | 86 | 83 | 84 | 81 | 79 | 79 | 77 | 75 | 72 |
| 2 | 94 | 85 | 78 | 71 | 91 | 83 | 76 | 70 | 77 | 72 | 67 | 73 | 68 | 64 | 68 | 65 | 61 | 58 |
| 3 | 86 | 74 | 66 | 59 | 82 | 72 | 64 | 57 | 68 | 61 | 55 | 64 | 58 | 53 | 60 | 55 | 51 | 48 |
| 4 | 78 | 66 | 56 | 49 | 75 | 64 | 55 | 48 | 60 | 52 | 47 | 56 | 50 | 45 | 53 | 48 | 43 | 41 |
| 5 | 72 | 58 | 49 | 42 | 69 | 57 | 48 | 41 | 53 | 46 | 40 | 51 | 44 | 39 | 48 | 42 | 38 | 35 |
| 6 | 66 | 52 | 43 | 36 | 64 | 51 | 42 | 36 | 48 | 41 | 35 | 46 | 39 | 34 | 43 | 37 | 33 | 31 |
| 7 | 61 | 47 | 38 | 32 | 59 | 46 | 38 | 32 | 44 | 36 | 31 | 41 | 35 | 30 | 39 | 34 | 29 | 27 |
| 8 | 57 | 43 | 34 | 28 | 55 | 42 | 34 | 28 | 40 | 33 | 27 | 38 | 31 | 27 | 36 | 30 | 26 | 24 |
| 9 | 53 | 40 | 31 | 26 | 51 | 39 | 31 | 25 | 37 | 30 | 25 | 35 | 29 | 24 | 33 | 28 | 23 | 21 |
| 10 | 50 | 36 | 28 | 23 | 48 | 36 | 28 | 23 | 34 | 27 | 22 | 32 | 26 | 22 | 31 | 25 | 21 | 19 |

### Zonal Lumen Summary

| Zone | Lumens | % Fixture |
|---|---|---|
| 0-30 | 2284 | 21.8 |
| 0-40 | 3749 | 35.8 |
| 0-60 | 6761 | 64.5 |
| 0-90 | 9534 | 91.0 |
| 0-180 | 10476 | 100.0 |

### Luminance Data

| Angle in Deg | Average 0-Deg cd/sm | Average 45-Deg cd/sm | Average 90-Deg cd/sm |
|---|---|---|---|
| 45 | 21477 | 13298 | 11981 |
| 55 | 20401 | 11328 | 10379 |
| 65 | 18652 | 9456 | 8882 |
| 75 | 14847 | 7637 | 7605 |
| 85 | 6211 | 6092 | 6513 |

## ORDERING INFORMATION

| Catalog # | UPC | Master Carton (2 units) UPC | Length | CCT (K) | Delivered Lumens | Watts | Efficacy (lm/W) | Controls | Input Current (A) 120V | Input Current (A) 277V |
|---|---|---|---|---|---|---|---|---|---|---|
| 2SLSTP1040DD-120V | 80083705771 | 80083713363 | 2 | 4000 | 1250 | 11 | 113 | Phase Cut Dim to 10% | 0.09 | – |
| 2SLSTP2040DD-120V | 80083705788 | 80083713370 | 2 | 4000 | 2510 | 23 | 111 | Phase Cut Dim to 10% | 0.19 | – |
| 4SLSTP2040DD-120V | 80083705795 | 80083713387 | 4 | 4000 | 2579 | 23 | 114 | Phase Cut Dim to 10% | 0.19 | – |
| 4SLSTP4040DD-120V | 80083705801 | 80083713394 | 4 | 4000 | 4474 | 40 | 112 | Phase Cut Dim to 10% | 0.33 | – |
| 2SLSTP2035DD-UNV | 80083814763 | 80083814770 | 2 | 3500 | 2498 | 23 | 110 | 0-10V Dim to 10% | 0.19 | 0.08 |
| 2SLSTP2040DD-UNV | 80083807826 | 80083807833 | 2 | 4000 | 2510 | 23 | 111 | 0-10V Dim to 10% | 0.19 | 0.08 |
| 4SLSTP2040DD-UNV | 80083705818 | 80083713400 | 4 | 4000 | 2410 | 21 | 113 | 0-10V Dim to 10% | 0.18 | 0.08 |
| 4SLSTP4035DD-UNV | 80083807765 | 80083807772 | 4 | 3500 | 4695 | 41 | 115 | 0-10V Dim to 10% | 0.34 | 0.15 |
| 4SLSTP4040DD-UNV | 80083705825 | 80083713417 | 4 | 4000 | 4760 | 44 | 109 | 0-10V Dim to 10% | 0.36 | 0.16 |
| 4SLSTP5535DD-UNV | 80083807802 | 80083807819 | 4 | 3500 | 5620 | 49 | 114 | 0-10V Dim to 10% | 0.41 | 0.18 |
| 4SLSTP5540DD-UNV | 80083807789 | 80083807796 | 4 | 4000 | 5845 | 49 | 119 | 0-10V Dim to 10% | 0.41 | 0.18 |
| 8SLSTP11035DD-UNV | 80083807703 | 80083807710 | 8 | 3500 | 10322 | 83 | 124 | 0-10V Dim to 10% | 0.7 | 0.3 |
| 8SLSTP11040DD-UNV | 80083807680 | 80083807697 | 8 | 4000 | 10464 | 83 | 125 | 0-10V Dim to 10% | 0.7 | 0.3 |
| 8SLSTP8035DD-UNV | 80083804368 | 80083804375 | 8 | 3500 | 8064 | 71 | 114 | 0-10V Dim to 10% | 0.59 | 0.26 |
| 8SLSTP8040DD-UNV | 80083814787 | 80083814794 | 8 | 4000 | 8176 | 71 | 115 | 0-10V Dim to 10% | 0.59 | 0.26 |
| 4SLSTP4040CS | 80083807741 | 80083807758 | 4 | 4000 | 4835 | 41 | 118 | 0-10V Dim to 10% and simple occupancy sensor | 0.34 | 0.15 |
| 8SLSTP8040CS | 80083807727 | 80083807734 | 8 | 4000 | 8304 | 72 | 115 | 0-10V Dim to 10% and simple occupancy sensor | 0.6 | 0.26 |
| 8SL8040 | 80083807925 | 80083807932 | 8 | 4000 | 8176 | 71 | 115 | 0-10V Dim to 10% | 0.62 | 0.27 |
| 92SL8040 | 80083807956 | 80083802876 | 92" | 4000 | 7866 | 74 | 106 | 0-10V Dim to 10% | 0.62 | 0.27 |

## ACCESSORIES (ORDER SEPARATELY) NOT FOR USE WITH 92SL8040

### ROW ALIGNER 8' - 8'

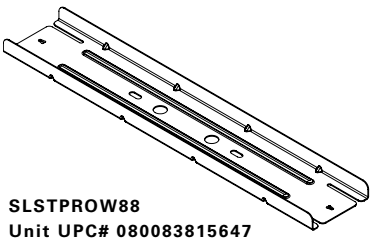

**SLSTPROW88**
**Unit UPC# 080083815647**
**Master Carton UPC# 080083815654**
**(50 per Master)**

### ROW ALIGNER 8' - 4'

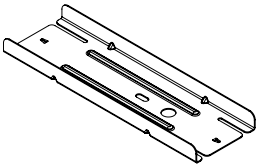

**SLSTPROW842**
**Unit UPC# 080083815661**
**Master Carton UPC# 080083815678**
**(100 per Master)**

**AYC-CHAIN/SET**=36" Hanging Chain Set w/V Hooks
**TOGGLE-10**=10' Suspension Aircraft Cable Kit (specify if another length needed)
**SCF-12-B**=12" Fixed Stem Set (specify if another length needed)
**2SLSTPLNS**=2 ft. Replacement Lens
**4SLSTPLNS**=4 ft. Replacement Lens
**8SLSTPLNS**=8 ft. Replacement Lens

## SENSOR COVERAGE ("CS" SKU DESIGNATION)

### SENSOR COVERAGE PATTERN TOP VIEW

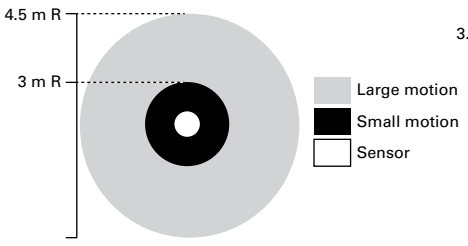


### SENSOR COVERAGE PATTERN SIDE VIEW

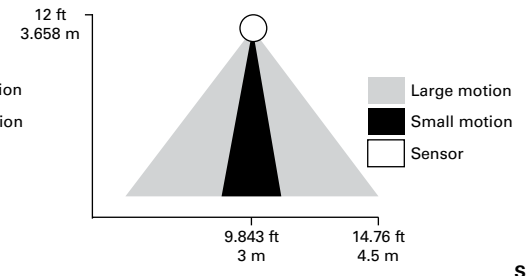


### LIGHT OUTPUT VERSUS TIME

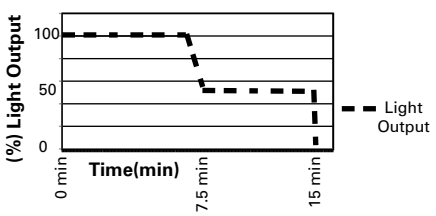


## SHIPPING DATA

| Catalog Base | Wt. | Units per Pallet |
|---|---|---|
| 2SLSTP | 2.8 lbs. | 144 |
| 4SLSTP | 4.6 lbs. | 72 |
| 8SLSTP | 9 lbs. | 45 |

Powering Business Worldwide

**Eaton**
1121 Highway 74 South
Peachtree City, GA 30269
P: 770-486-4800
www.eaton.com/lighting

Specifications and dimensions subject to change without notice.

# Metalux AP Series

## DESCRIPTION

The SLSTP is a low profile, high quality luminaire offering the latest solid state lighting and electronic driver technology that optimizes performance and energy efficiency. With the SLSTP's low profile design, this series is an ideal solution for restricted spaces and meets traditional requirements for single or continuous row applications.

The SLSTP is an excellent solution for commercial, industrial, retail or residential applications. Ideal for new construction or simple fluorescent retrofit replacement.

| | | |
|---|---|---|
| Catalog # | 4SLSTP4035DD-UNV | Type |
| Project | ALOFT | |
| Comments | | Date |
| Prepared by | K.KENNY,678-447-5208, KATHLEENKENNY@EATOM.COM, | ALJ-04b |
| | | Revision Date: |

## SPECIFICATION FEATURES

**Construction**
Fixture channel, cover and end plates are formed from cold rolled steel and offers all of the features needed for installation including multiple KO, a round J-box cover, wiring connectors and decorative end caps. The SLSTP is post painted for ease of handling. Decorative end caps snap-on for an improved aesthetic finish. The SLSTP is suitable for either single or continuous row applications.

**Controls**
Combine with energy saving products like occupancy sensors, daylighting controls, and lighting relay panels to maximize energy savings. Standard 0-10V continuous dimming driver works with any standard 0-10V control/ dimmer. Dimming range is 10% to 100% and varies by control device. 120V drivers work with standard 120V phase cut dimmers. See dimming compatability chart posted on website. Optional simple occupancy sensors enable code compliance all in a simple package.

**Electrical**
Long-Life LED system with an energy-efficient electronic driver comes in UNV (120-277V) or 120V versions. Both drivers offer smooth dimming with a number of residential and commercial dimmers. LED's CCT are 3500K and 4000K with a CRI ≥ 80. Projected life is 50,000 hours at 70% lumen output.

**Finish**
Post painted with high reflective paint – standard.

**Shielding**
SLSTP offers a frost lens with decorative end caps for single and end of the row applications.

**Installation**
Fixture may be surface, suspended, or wall mounted. Multiple 7/8" K.O. on back and one on each end. See accessories below for ordering information.

**Compliance**
cULus listed for damp location rated. LED's comply with IESNA LM-79 and LM-80 standards. Under 4", ADA Compliant. DesignLights Consortium® Qualified and classified for DLC Standard, refer to www.designlights.org for details. RoHS compliant. Suitable for use in clothes closets when installed in accordance with the NEC 410.16 spacing requirements.

**Warranty**
Five-year warranty.

## SLSTP LENSED LED

Lensed LED Striplight

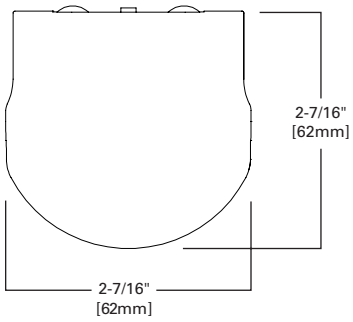


WITH ENDCAP INSTALLED

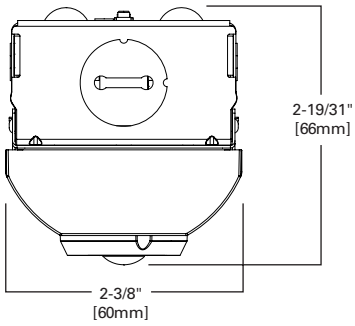


WITH SENSOR – NO ENDCAP INSTALLED

## MOUNTING DATA (SHOWN WITH ENDCAPS)

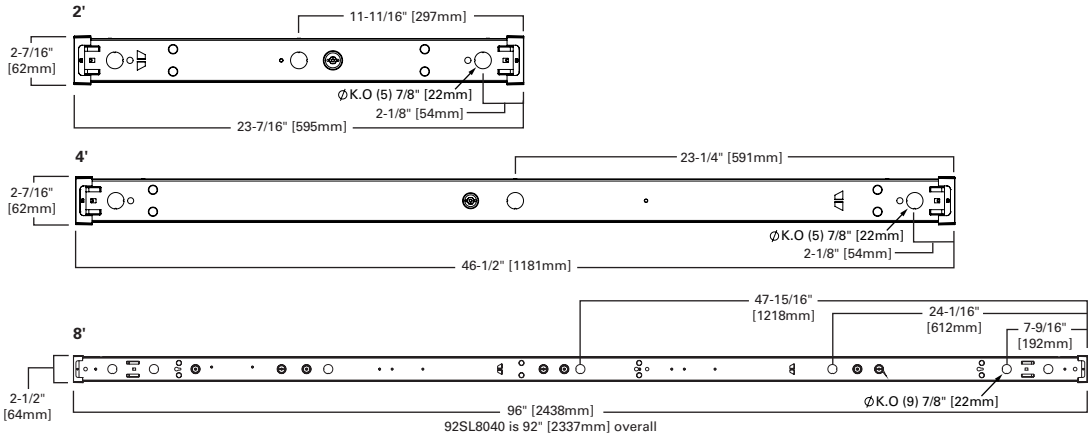


## LOAD DATA

| | 2' | 4' | 8' |
|---|---|---|---|
| PF | 0.99 | 0.99 | 0.98 |
| THD% | 13.6 | 12.9 | < 20 |
| Weight | 2.8 | 4.6 | 9 |
| Low Temp Start | -20C | -20C | -20C |

**LINEAR DISCONNECT**
Safe and convenient means of disconnecting power

Powering Business Worldwide

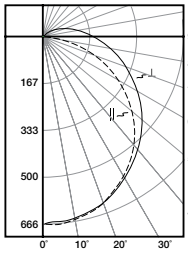


## 4SLSTP2040DD-UNV

Electronic Driver

Linear LED 4000K

Spacing criterion: (II) 1.26 x mounting height, (⊥) 1.29 x mounting height

Lumens: 2410

Input Watts: 21.3W

Efficacy:113.1 lm/W

Test Report: 4SLSTP2040DD-UNV.IES

### Candlepower

| Angle | Along II | 45° | Across ⊥ |
|---|---|---|---|
| 0 | 661 | 661 | 661 |
| 5 | 663 | 664 | 655 |
| 10 | 655 | 657 | 648 |
| 15 | 639 | 644 | 637 |
| 20 | 618 | 627 | 620 |
| 25 | 592 | 603 | 598 |
| 30 | 563 | 576 | 572 |
| 35 | 528 | 544 | 544 |
| 40 | 488 | 506 | 513 |
| 45 | 445 | 467 | 481 |
| 50 | 399 | 426 | 446 |
| 55 | 349 | 383 | 411 |
| 60 | 297 | 340 | 374 |
| 65 | 241 | 296 | 338 |
| 70 | 180 | 253 | 302 |
| 75 | 121 | 209 | 266 |
| 80 | 65 | 172 | 233 |
| 85 | 21 | 140 | 199 |
| 90 | 0 | 111 | 169 |

### Coefficients of Utilization

Effective floor cavity reflectance 20%

| rc | 80% | | | | 70% | | | | 50% | | | 30% | | | 10% | | | 0% |
|---|---|---|---|---|---|---|---|---|---|---|---|---|---|---|---|---|---|---|
| rw | 70 | 50 | 30 | 10 | 70 | 50 | 30 | 10 | 50 | 30 | 10 | 50 | 30 | 10 | 50 | 30 | 10 | 0 |
| RCR | | | | | | | | | | | | | | | | | | |
| 0 | 117 | 117 | 117 | 117 | 113 | 113 | 113 | 113 | 106 | 106 | 106 | 100 | 100 | 100 | 94 | 94 | 94 | 91 |
| 1 | 105 | 99 | 94 | 89 | 101 | 96 | 91 | 87 | 90 | 86 | 83 | 84 | 81 | 78 | 79 | 77 | 75 | 72 |
| 2 | 94 | 85 | 78 | 71 | 91 | 82 | 76 | 70 | 77 | 72 | 67 | 73 | 68 | 64 | 68 | 64 | 61 | 58 |
| 3 | 86 | 74 | 65 | 58 | 82 | 72 | 64 | 57 | 68 | 61 | 55 | 64 | 58 | 53 | 60 | 55 | 51 | 48 |
| 4 | 78 | 65 | 56 | 49 | 75 | 63 | 55 | 48 | 60 | 52 | 46 | 56 | 50 | 45 | 53 | 48 | 43 | 41 |
| 5 | 72 | 58 | 49 | 42 | 69 | 56 | 48 | 41 | 53 | 46 | 40 | 50 | 44 | 39 | 48 | 42 | 37 | 35 |
| 6 | 66 | 52 | 43 | 36 | 63 | 51 | 42 | 36 | 48 | 40 | 35 | 45 | 39 | 34 | 43 | 37 | 33 | 30 |
| 7 | 61 | 47 | 38 | 32 | 59 | 46 | 37 | 31 | 44 | 36 | 31 | 41 | 35 | 30 | 39 | 33 | 29 | 27 |
| 8 | 57 | 43 | 34 | 28 | 55 | 42 | 34 | 28 | 40 | 32 | 27 | 38 | 31 | 26 | 36 | 30 | 26 | 24 |
| 9 | 53 | 39 | 31 | 25 | 51 | 38 | 30 | 25 | 37 | 29 | 24 | 35 | 28 | 24 | 33 | 27 | 23 | 21 |
| 10 | 50 | 36 | 28 | 23 | 48 | 35 | 28 | 23 | 34 | 27 | 22 | 32 | 26 | 22 | 31 | 25 | 21 | 19 |

### Zonal Lumen Summary

| Zone | Lumens | % Fixture |
|---|---|---|
| 0-30 | 518 | 21.5 |
| 0-40 | 854 | 35.4 |
| 0-60 | 1551 | 64.3 |
| 0-90 | 2193 | 91.0 |
| 0-180 | 2410 | 100.0 |

### Luminance Data

| Angle in Deg | Average 0-Deg cd/sm | Average 45-Deg cd/sm | Average 90-Deg cd/sm |
|---|---|---|---|
| 45 | 9755 | 6140 | 5491 |
| 55 | 9272 | 5254 | 4765 |
| 65 | 8452 | 4384 | 4107 |
| 75 | 6532 | 3478 | 3507 |
| 85 | 2635 | 2754 | 2966 |

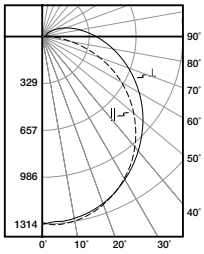


## 4SLSTP4040DD-UNV

Electronic Driver

Linear LED 4000K

Spacing criterion: (II) 1.27 x mounting height, (⊥) 1.29 x mounting height

Lumens: 4760

Input Watts: 43.5W

Efficacy: 109.4 lm/W

Test Report: 4SLSTP4040DD-UNV.IES

### Candlepower

| Angle | Along II | 45° | Across ⊥ |
|---|---|---|---|
| 0 | 1307 | 1307 | 1307 |
| 5 | 1316 | 1304 | 1297 |
| 10 | 1300 | 1289 | 1282 |
| 15 | 1271 | 1264 | 1258 |
| 20 | 1229 | 1229 | 1224 |
| 25 | 1178 | 1183 | 1179 |
| 30 | 1117 | 1128 | 1128 |
| 35 | 1048 | 1062 | 1072 |
| 40 | 969 | 991 | 1011 |
| 45 | 880 | 913 | 947 |
| 50 | 789 | 833 | 882 |
| 55 | 689 | 748 | 812 |
| 60 | 586 | 666 | 741 |
| 65 | 475 | 581 | 670 |
| 70 | 358 | 497 | 600 |
| 75 | 240 | 417 | 530 |
| 80 | 128 | 344 | 464 |
| 85 | 41 | 280 | 401 |
| 90 | 1 | 222 | 343 |

### Coefficients of Utilization

Effective floor cavity reflectance 20%

| rc | 80% | | | | 70% | | | | 50% | | | 30% | | | 10% | | | 0% |
|---|---|---|---|---|---|---|---|---|---|---|---|---|---|---|---|---|---|---|
| rw | 70 | 50 | 30 | 10 | 70 | 50 | 30 | 10 | 50 | 30 | 10 | 50 | 30 | 10 | 50 | 30 | 10 | 0 |
| RCR | | | | | | | | | | | | | | | | | | |
| 0 | 117 | 117 | 117 | 117 | 113 | 113 | 113 | 113 | 106 | 106 | 106 | 100 | 100 | 100 | 94 | 94 | 94 | 91 |
| 1 | 105 | 99 | 94 | 89 | 101 | 96 | 91 | 87 | 90 | 86 | 83 | 84 | 81 | 78 | 79 | 77 | 74 | 72 |
| 2 | 94 | 85 | 78 | 71 | 91 | 82 | 75 | 70 | 77 | 72 | 67 | 73 | 68 | 64 | 68 | 64 | 61 | 58 |
| 3 | 86 | 74 | 65 | 58 | 82 | 72 | 64 | 57 | 67 | 61 | 55 | 63 | 58 | 53 | 60 | 55 | 51 | 48 |
| 4 | 78 | 65 | 56 | 49 | 75 | 63 | 55 | 48 | 60 | 52 | 46 | 56 | 50 | 45 | 53 | 48 | 43 | 41 |
| 5 | 72 | 58 | 49 | 42 | 69 | 56 | 48 | 41 | 53 | 46 | 40 | 50 | 44 | 39 | 47 | 42 | 37 | 35 |
| 6 | 66 | 52 | 43 | 36 | 63 | 51 | 42 | 36 | 48 | 40 | 35 | 45 | 39 | 34 | 43 | 37 | 33 | 30 |
| 7 | 61 | 47 | 38 | 32 | 59 | 46 | 37 | 31 | 43 | 36 | 30 | 41 | 35 | 30 | 39 | 33 | 29 | 27 |
| 8 | 57 | 43 | 34 | 28 | 55 | 42 | 34 | 28 | 40 | 32 | 27 | 38 | 31 | 26 | 36 | 30 | 26 | 24 |
| 9 | 53 | 39 | 31 | 25 | 51 | 38 | 30 | 25 | 37 | 29 | 24 | 35 | 28 | 24 | 33 | 27 | 23 | 21 |
| 10 | 50 | 36 | 28 | 23 | 48 | 35 | 28 | 23 | 34 | 27 | 22 | 32 | 26 | 22 | 31 | 25 | 21 | 19 |

### Zonal Lumen Summary

| Zone | Lumens | % Fixture |
|---|---|---|
| 0-30 | 1021 | 21.5 |
| 0-40 | 1682 | 35.3 |
| 0-60 | 3053 | 64.1 |
| 0-90 | 4328 | 90.9 |
| 0-180 | 4760 | 100.0 |

### Luminance Data

| Angle in Deg | Average 0-Deg cd/sm | Average 45-Deg cd/sm | Average 90-Deg cd/sm |
|---|---|---|---|
| 45 | 20094 | 12212 | 10812 |
| 55 | 19395 | 10476 | 9413 |
| 65 | 18147 | 8821 | 8140 |
| 75 | 14972 | 7149 | 6987 |
| 85 | 7595 | 5711 | 5976 |

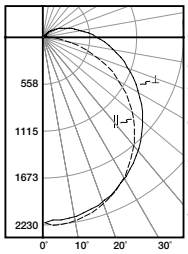


## 8SLSTP8040DD-UNV

Electronic Driver

Linear LED 4000K

Spacing criterion: (II) 1.28 x mounting height, (⊥) 1.30 x mounting height

Lumens: 8176

Input Watts: 71W

Efficacy:115 lm/W

Test Report: 8SLSTP8040DD-UNV.IES

### Candlepower

| Angle | Along II | 45° | Across ⊥ |
|---|---|---|---|
| 0 | 2200 | 2200 | 2200 |
| 5 | 2226 | 2188 | 2174 |
| 10 | 2200 | 2164 | 2151 |
| 15 | 2151 | 2123 | 2115 |
| 20 | 2082 | 2064 | 2060 |
| 25 | 1995 | 1989 | 1991 |
| 30 | 1892 | 1898 | 1912 |
| 35 | 1770 | 1789 | 1819 |
| 40 | 1638 | 1673 | 1722 |
| 45 | 1490 | 1543 | 1618 |
| 50 | 1330 | 1407 | 1507 |
| 55 | 1166 | 1271 | 1391 |
| 60 | 987 | 1129 | 1271 |
| 65 | 801 | 990 | 1154 |
| 70 | 604 | 850 | 1038 |
| 75 | 401 | 718 | 923 |
| 80 | 219 | 598 | 813 |
| 85 | 71 | 491 | 708 |
| 90 | 4 | 389 | 606 |

### Coefficients of Utilization

Effective floor cavity reflectance 20%

| rc | 80% | | | | 70% | | | | 50% | | | 30% | | | 10% | | | 0% |
|---|---|---|---|---|---|---|---|---|---|---|---|---|---|---|---|---|---|---|
| rw | 70 | 50 | 30 | 10 | 70 | 50 | 30 | 10 | 50 | 30 | 10 | 50 | 30 | 10 | 50 | 30 | 10 | 0 |
| RCR | | | | | | | | | | | | | | | | | | |
| 0 | 117 | 117 | 117 | 117 | 113 | 113 | 113 | 113 | 106 | 106 | 106 | 99 | 99 | 99 | 93 | 93 | 93 | 90 |
| 1 | 104 | 99 | 94 | 89 | 100 | 95 | 91 | 87 | 89 | 85 | 82 | 83 | 80 | 78 | 78 | 76 | 74 | 71 |
| 2 | 94 | 85 | 77 | 71 | 90 | 82 | 75 | 69 | 77 | 71 | 66 | 72 | 67 | 63 | 67 | 64 | 60 | 57 |
| 3 | 85 | 74 | 65 | 58 | 82 | 71 | 63 | 57 | 67 | 60 | 55 | 63 | 57 | 52 | 59 | 54 | 50 | 47 |
| 4 | 78 | 65 | 56 | 49 | 75 | 63 | 54 | 48 | 59 | 52 | 46 | 56 | 49 | 44 | 52 | 47 | 43 | 40 |
| 5 | 71 | 58 | 48 | 42 | 68 | 56 | 47 | 41 | 53 | 45 | 39 | 50 | 43 | 38 | 47 | 41 | 37 | 34 |
| 6 | 66 | 52 | 43 | 36 | 63 | 50 | 42 | 35 | 48 | 40 | 34 | 45 | 38 | 33 | 42 | 37 | 32 | 30 |
| 7 | 61 | 47 | 38 | 32 | 58 | 46 | 37 | 31 | 43 | 36 | 30 | 41 | 34 | 29 | 39 | 33 | 28 | 26 |
| 8 | 57 | 43 | 34 | 28 | 54 | 42 | 33 | 28 | 39 | 32 | 27 | 37 | 31 | 26 | 35 | 30 | 25 | 23 |
| 9 | 53 | 39 | 31 | 25 | 51 | 38 | 30 | 25 | 36 | 29 | 24 | 34 | 28 | 23 | 33 | 27 | 23 | 21 |
| 10 | 49 | 36 | 28 | 23 | 48 | 35 | 28 | 22 | 33 | 27 | 22 | 32 | 26 | 21 | 30 | 25 | 21 | 19 |

### Zonal Lumen Summary

| Zone | Lumens | % Fixture |
|---|---|---|
| 0-30 | 1724 | 21.1 |
| 0-40 | 2842 | 34.8 |
| 0-60 | 5168 | 63.2 |
| 0-90 | 7359 | 90.0 |
| 0-180 | 8176 | 100.0 |

### Luminance Data

| Angle in Deg | Average 0-Deg cd/sm | Average 45-Deg cd/sm | Average 90-Deg cd/sm |
|---|---|---|---|
| 45 | 16652 | 10222 | 9228 |
| 55 | 15921 | 8802 | 8055 |
| 65 | 14631 | 7411 | 7002 |
| 75 | 11606 | 6055 | 6076 |
| 85 | 5307 | 4909 | 5268 |

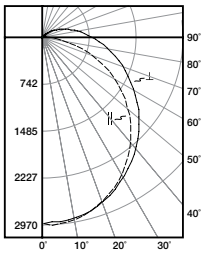


## 8SLSTP11040DD-UNV

Electronic Driver

Linear LED 4000K

Spacing criterion: (II) 1.26 x mounting height, (⊥) 1.28 x mounting height

Lumens: 10476

Input Watts: 83.4W

Efficacy: 126 lm/W

Test Report: 8SLSTP11040DD-UNV.IES

### Candlepower

| Angle | Along II | 45° | Across ⊥ |
|---|---|---|---|
| 0 | 2941 | 2941 | 2941 |
| 5 | 2957 | 2913 | 2925 |
| 10 | 2913 | 2876 | 2888 |
| 15 | 2838 | 2819 | 2934 |
| 20 | 2740 | 2736 | 2750 |
| 25 | 2612 | 2626 | 2643 |
| 30 | 2470 | 2499 | 2523 |
| 35 | 2302 | 2349 | 2391 |
| 40 | 2123 | 2186 | 2255 |
| 45 | 1922 | 2008 | 2101 |
| 50 | 1713 | 1825 | 1949 |
| 55 | 1494 | 1636 | 1792 |
| 60 | 1265 | 1451 | 1628 |
| 65 | 1021 | 1263 | 1464 |
| 70 | 769 | 1076 | 1309 |
| 75 | 514 | 905 | 1155 |
| 80 | 272 | 747 | 1011 |
| 85 | 83 | 609 | 875 |
| 90 | 2 | 485 | 747 |

### Coefficients of Utilization

Effective floor cavity reflectance 20%

| rc | 80% | | | | 70% | | | | 50% | | | 30% | | | 10% | | | 0% |
|---|---|---|---|---|---|---|---|---|---|---|---|---|---|---|---|---|---|---|
| rw | 70 | 50 | 30 | 10 | 70 | 50 | 30 | 10 | 50 | 30 | 10 | 50 | 30 | 10 | 50 | 30 | 10 | 0 |
| RCR | | | | | | | | | | | | | | | | | | |
| 0 | 117 | 117 | 117 | 117 | 113 | 113 | 113 | 113 | 106 | 106 | 106 | 100 | 100 | 100 | 94 | 94 | 94 | 91 |
| 1 | 105 | 99 | 94 | 89 | 101 | 96 | 91 | 87 | 90 | 86 | 83 | 84 | 81 | 79 | 79 | 77 | 75 | 72 |
| 2 | 94 | 85 | 78 | 71 | 91 | 83 | 76 | 70 | 77 | 72 | 67 | 73 | 68 | 64 | 68 | 65 | 61 | 58 |
| 3 | 86 | 74 | 66 | 59 | 82 | 72 | 64 | 57 | 68 | 61 | 55 | 64 | 58 | 53 | 60 | 55 | 51 | 48 |
| 4 | 78 | 66 | 56 | 49 | 75 | 64 | 55 | 48 | 60 | 52 | 47 | 56 | 50 | 45 | 53 | 48 | 43 | 41 |
| 5 | 72 | 58 | 49 | 42 | 69 | 57 | 48 | 41 | 53 | 46 | 40 | 51 | 44 | 39 | 48 | 42 | 38 | 35 |
| 6 | 66 | 52 | 43 | 36 | 64 | 51 | 42 | 36 | 48 | 41 | 35 | 46 | 39 | 34 | 43 | 37 | 33 | 31 |
| 7 | 61 | 47 | 38 | 32 | 59 | 46 | 38 | 32 | 44 | 36 | 31 | 41 | 35 | 30 | 39 | 34 | 29 | 27 |
| 8 | 57 | 43 | 34 | 28 | 55 | 42 | 34 | 28 | 40 | 33 | 27 | 38 | 31 | 27 | 36 | 30 | 26 | 24 |
| 9 | 53 | 40 | 31 | 26 | 51 | 39 | 31 | 25 | 37 | 30 | 25 | 35 | 29 | 24 | 33 | 28 | 23 | 21 |
| 10 | 50 | 36 | 28 | 23 | 48 | 36 | 28 | 23 | 34 | 27 | 22 | 32 | 26 | 22 | 31 | 25 | 21 | 19 |

### Zonal Lumen Summary

| Zone | Lumens | % Fixture |
|---|---|---|
| 0-30 | 2284 | 21.8 |
| 0-40 | 3749 | 35.8 |
| 0-60 | 6761 | 64.5 |
| 0-90 | 9534 | 91.0 |
| 0-180 | 10476 | 100.0 |

### Luminance Data

| Angle in Deg | Average 0-Deg cd/sm | Average 45-Deg cd/sm | Average 90-Deg cd/sm |
|---|---|---|---|
| 45 | 21477 | 13298 | 11981 |
| 55 | 20401 | 11328 | 10379 |
| 65 | 18652 | 9456 | 8882 |
| 75 | 14847 | 7637 | 7605 |
| 85 | 6211 | 6092 | 6513 |

## ORDERING INFORMATION

| Catalog # | UPC | Master Carton (2 units) UPC | Length | CCT (K) | Delivered Lumens | Watts | Efficacy (lm/W) | Controls | Input Current (A) 120V | Input Current (A) 277V |
|---|---|---|---|---|---|---|---|---|---|---|
| 2SLSTP1040DD-120V | 80083705771 | 80083713363 | 2 | 4000 | 1250 | 11 | 113 | Phase Cut Dim to 10% | 0.09 | – |
| 2SLSTP2040DD-120V | 80083705788 | 80083713370 | 2 | 4000 | 2510 | 23 | 111 | Phase Cut Dim to 10% | 0.19 | – |
| 4SLSTP2040DD-120V | 80083705795 | 80083713387 | 4 | 4000 | 2579 | 23 | 114 | Phase Cut Dim to 10% | 0.19 | – |
| 4SLSTP4040DD-120V | 80083705801 | 80083713394 | 4 | 4000 | 4474 | 40 | 112 | Phase Cut Dim to 10% | 0.33 | – |
| 2SLSTP2035DD-UNV | 80083814763 | 80083814770 | 2 | 3500 | 2498 | 23 | 110 | 0-10V Dim to 10% | 0.19 | 0.08 |
| 2SLSTP2040DD-UNV | 80083807826 | 80083807833 | 2 | 4000 | 2510 | 23 | 111 | 0-10V Dim to 10% | 0.19 | 0.08 |
| 4SLSTP2040DD-UNV | 80083705818 | 80083713400 | 4 | 4000 | 2410 | 21 | 113 | 0-10V Dim to 10% | 0.18 | 0.08 |
| 4SLSTP4035DD-UNV | 80083807765 | 80083807772 | 4 | 3500 | 4695 | 41 | 115 | 0-10V Dim to 10% | 0.34 | 0.15 |
| 4SLSTP4040DD-UNV | 80083705825 | 80083713417 | 4 | 4000 | 4760 | 44 | 109 | 0-10V Dim to 10% | 0.36 | 0.16 |
| 4SLSTP5535DD-UNV | 80083807802 | 80083807819 | 4 | 3500 | 5620 | 49 | 114 | 0-10V Dim to 10% | 0.41 | 0.18 |
| 4SLSTP5540DD-UNV | 80083807789 | 80083807796 | 4 | 4000 | 5845 | 49 | 119 | 0-10V Dim to 10% | 0.41 | 0.18 |
| 8SLSTP11035DD-UNV | 80083807703 | 80083807710 | 8 | 3500 | 10322 | 83 | 124 | 0-10V Dim to 10% | 0.7 | 0.3 |
| 8SLSTP11040DD-UNV | 80083807680 | 80083807697 | 8 | 4000 | 10464 | 83 | 125 | 0-10V Dim to 10% | 0.7 | 0.3 |
| 8SLSTP8035DD-UNV | 80083804368 | 80083804375 | 8 | 3500 | 8064 | 71 | 114 | 0-10V Dim to 10% | 0.59 | 0.26 |
| 8SLSTP8040DD-UNV | 80083814787 | 80083814794 | 8 | 4000 | 8176 | 71 | 115 | 0-10V Dim to 10% | 0.59 | 0.26 |
| 4SLSTP4040CS | 80083807741 | 80083807758 | 4 | 4000 | 4835 | 41 | 118 | 0-10V Dim to 10% and simple occupancy sensor | 0.34 | 0.15 |
| 8SLSTP8040CS | 80083807727 | 80083807734 | 8 | 4000 | 8304 | 72 | 115 | 0-10V Dim to 10% and simple occupancy sensor | 0.6 | 0.26 |
| 8SL8040 | 80083807925 | 80083807932 | 8 | 4000 | 8176 | 71 | 115 | 0-10V Dim to 10% | 0.62 | 0.27 |
| 92SL8040 | 80083807956 | 80083802876 | 92" | 4000 | 7866 | 74 | 106 | 0-10V Dim to 10% | 0.62 | 0.27 |

## ACCESSORIES (ORDER SEPARATELY) NOT FOR USE WITH 92SL8040

### ROW ALIGNER 8' - 8'

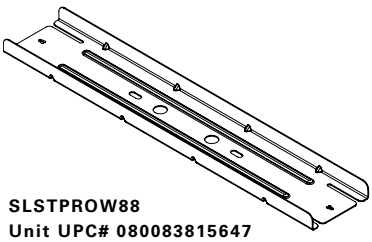

**SLSTPROW88**
**Unit UPC# 080083815647**
**Master Carton UPC# 080083815654**
**(50 per Master)**

### ROW ALIGNER 8' - 4'

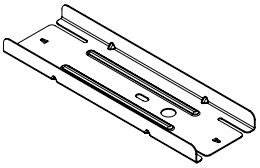

**SLSTPROW842**
**Unit UPC# 080083815661**
**Master Carton UPC# 080083815678**
**(100 per Master)**

**AYC-CHAIN/SET**=36" Hanging Chain Set w/V Hooks
**TOGGLE-10**=10' Suspension Aircraft Cable Kit (specify if another length needed)
**SCF-12-B**=12" Fixed Stem Set (specify if another length needed)
**2SLSTPLNS**=2 ft. Replacement Lens
**4SLSTPLNS**=4 ft. Replacement Lens
**8SLSTPLNS**=8 ft. Replacement Lens

## SENSOR COVERAGE ("CS" SKU DESIGNATION)

### SENSOR COVERAGE PATTERN TOP VIEW

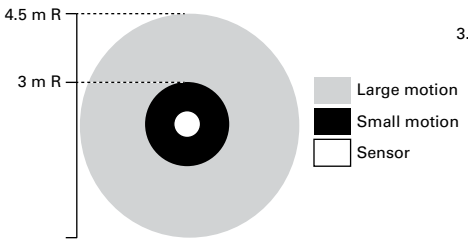


### SENSOR COVERAGE PATTERN SIDE VIEW

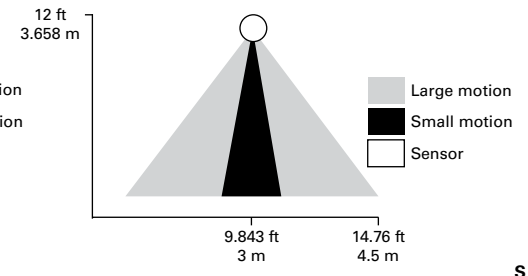


### LIGHT OUTPUT VERSUS TIME

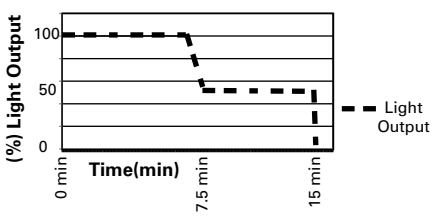


## SHIPPING DATA

| Catalog Base | Wt. | Units per Pallet |
|---|---|---|
| 2SLSTP | 2.8 lbs. | 144 |
| 4SLSTP | 4.6 lbs. | 72 |
| 8SLSTP | 9 lbs. | 45 |

Powering Business Worldwide

**Eaton**
1121 Highway 74 South
Peachtree City, GA 30269
P: 770-486-4800
www.eaton.com/lighting

Specifications and dimensions subject to change without notice.

# Metalux AP Series

## DESCRIPTION

The SLSTP is a low profile, high quality luminaire offering the latest solid state lighting and electronic driver technology that optimizes performance and energy efficiency. With the SLSTP's low profile design, this series is an ideal solution for restricted spaces and meets traditional requirements for single or continuous row applications.

The SLSTP is an excellent solution for commercial, industrial, retail or residential applications. Ideal for new construction or simple fluorescent retrofit replacement.

| | | |
|---|---|---|
| **Catalog #** | 8SLSTP8035DD-UNV | **Type** |
| **Project** | ALOFT | |
| **Comments** | | **Date** |
| **Prepared by** | K.KENNY,678-447-5208, KATHLEENKENNY@EATOM.COM, | ALJ-04c |
| | | Revision Date: |

## SPECIFICATION FEATURES

**Construction**
Fixture channel, cover and end plates are formed from cold rolled steel and offers all of the features needed for installation including multiple KO, a round J-box cover, wiring connectors and decorative end caps. The SLSTP is post painted for ease of handling. Decorative end caps snap-on for an improved aesthetic finish. The SLSTP is suitable for either single or continuous row applications.

**Controls**
Combine with energy saving products like occupancy sensors, daylighting controls, and lighting relay panels to maximize energy savings. Standard 0-10V continuous dimming driver works with any standard 0-10V control/ dimmer. Dimming range is 10% to 100% and varies by control device. 120V drivers work with standard 120V phase cut dimmers. See dimming compatability chart posted on website. Optional simple occupancy sensors enable code compliance all in a simple package.

**Electrical**
Long-Life LED system with an energy-efficient electronic driver comes in UNV (120-277V) or 120V versions. Both drivers offer smooth dimming with a number of residential and commercial dimmers. LED's CCT are 3500K and 4000K with a CRI ≥ 80. Projected life is 50,000 hours at 70% lumen output.

**Finish**
Post painted with high reflective paint – standard.

**Shielding**
SLSTP offers a frost lens with decorative end caps for single and end of the row applications.

**Installation**
Fixture may be surface, suspended, or wall mounted. Multiple 7/8" K.O. on back and one on each end. See accessories below for ordering information.

**Compliance**
cULus listed for damp location rated. LED's comply with IESNA LM-79 and LM-80 standards. Under 4", ADA Compliant. DesignLights Consortium® Qualified and classified for DLC Standard, refer to www.designlights.org for details. RoHS compliant. Suitable for use in clothes closets when installed in accordance with the NEC 410.16 spacing requirements.

**Warranty**
Five-year warranty.

# SLSTP LENSED
LED

Lensed LED Striplight

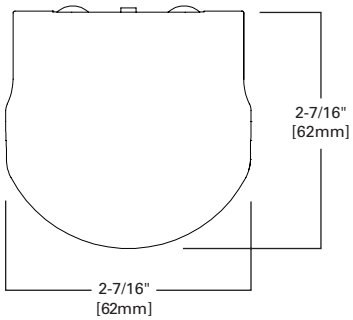


WITH ENDCAP INSTALLED

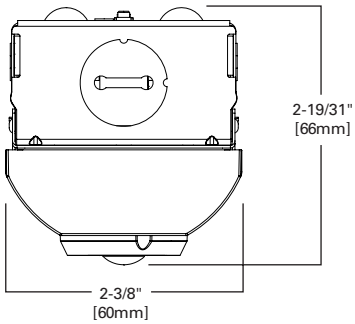


WITH SENSOR – NO ENDCAP INSTALLED

## MOUNTING DATA (SHOWN WITH ENDCAPS)

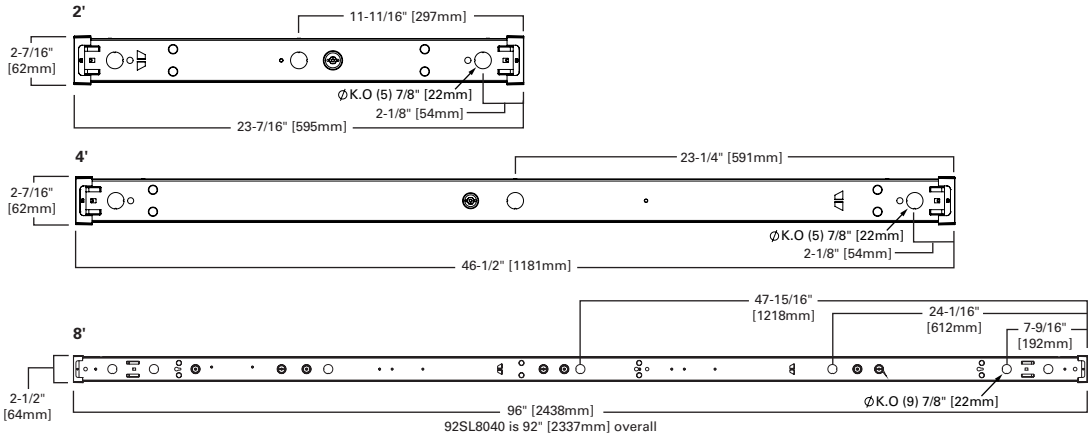


## LOAD DATA

| | 2' | 4' | 8' |
|---|---|---|---|
| PF | 0.99 | 0.99 | 0.98 |
| THD% | 13.6 | 12.9 | < 20 |
| Weight | 2.8 | 4.6 | 9 |
| Low Temp Start | -20C | -20C | -20C |

**LINEAR DISCONNECT**
Safe and convenient means of disconnecting power

Powering Business Worldwide

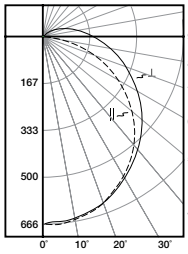


## 4SLSTP2040DD-UNV

Electronic Driver

Linear LED 4000K

Spacing criterion: (II) 1.26 x mounting height, (⊥) 1.29 x mounting height

Lumens: 2410

Input Watts: 21.3W

Efficacy:113.1 lm/W

Test Report: 4SLSTP2040DD-UNV.IES

### Candlepower

| Angle | Along II | 45° | Across ⊥ |
|---|---|---|---|
| 0 | 661 | 661 | 661 |
| 5 | 663 | 664 | 655 |
| 10 | 655 | 657 | 648 |
| 15 | 639 | 644 | 637 |
| 20 | 618 | 627 | 620 |
| 25 | 592 | 603 | 598 |
| 30 | 563 | 576 | 572 |
| 35 | 528 | 544 | 544 |
| 40 | 488 | 506 | 513 |
| 45 | 445 | 467 | 481 |
| 50 | 399 | 426 | 446 |
| 55 | 349 | 383 | 411 |
| 60 | 297 | 340 | 374 |
| 65 | 241 | 296 | 338 |
| 70 | 180 | 253 | 302 |
| 75 | 121 | 209 | 266 |
| 80 | 65 | 172 | 233 |
| 85 | 21 | 140 | 199 |
| 90 | 0 | 111 | 169 |

### Coefficients of Utilization

Effective floor cavity reflectance 20%

| rc | 80% | | | | 70% | | | | 50% | | | 30% | | | 10% | | | 0% |
|---|---|---|---|---|---|---|---|---|---|---|---|---|---|---|---|---|---|---|
| rw | 70 | 50 | 30 | 10 | 70 | 50 | 30 | 10 | 50 | 30 | 10 | 50 | 30 | 10 | 50 | 30 | 10 | 0 |
| RCR | | | | | | | | | | | | | | | | | | |
| 0 | 117 | 117 | 117 | 117 | 113 | 113 | 113 | 113 | 106 | 106 | 106 | 100 | 100 | 100 | 94 | 94 | 94 | 91 |
| 1 | 105 | 99 | 94 | 89 | 101 | 96 | 91 | 87 | 90 | 86 | 83 | 84 | 81 | 78 | 79 | 77 | 75 | 72 |
| 2 | 94 | 85 | 78 | 71 | 91 | 82 | 76 | 70 | 77 | 72 | 67 | 73 | 68 | 64 | 68 | 64 | 61 | 58 |
| 3 | 86 | 74 | 65 | 58 | 82 | 72 | 64 | 57 | 68 | 61 | 55 | 64 | 58 | 53 | 60 | 55 | 51 | 48 |
| 4 | 78 | 65 | 56 | 49 | 75 | 63 | 55 | 48 | 60 | 52 | 46 | 56 | 50 | 45 | 53 | 48 | 43 | 41 |
| 5 | 72 | 58 | 49 | 42 | 69 | 56 | 48 | 41 | 53 | 46 | 40 | 50 | 44 | 39 | 48 | 42 | 37 | 35 |
| 6 | 66 | 52 | 43 | 36 | 63 | 51 | 42 | 36 | 48 | 40 | 35 | 45 | 39 | 34 | 43 | 37 | 33 | 30 |
| 7 | 61 | 47 | 38 | 32 | 59 | 46 | 37 | 31 | 44 | 36 | 31 | 41 | 35 | 30 | 39 | 33 | 29 | 27 |
| 8 | 57 | 43 | 34 | 28 | 55 | 42 | 34 | 28 | 40 | 32 | 27 | 38 | 31 | 26 | 36 | 30 | 26 | 24 |
| 9 | 53 | 39 | 31 | 25 | 51 | 38 | 30 | 25 | 37 | 29 | 24 | 35 | 28 | 24 | 33 | 27 | 23 | 21 |
| 10 | 50 | 36 | 28 | 23 | 48 | 35 | 28 | 23 | 34 | 27 | 22 | 32 | 26 | 22 | 31 | 25 | 21 | 19 |

### Zonal Lumen Summary

| Zone | Lumens | % Fixture |
|---|---|---|
| 0-30 | 518 | 21.5 |
| 0-40 | 854 | 35.4 |
| 0-60 | 1551 | 64.3 |
| 0-90 | 2193 | 91.0 |
| 0-180 | 2410 | 100.0 |

### Luminance Data

| Angle in Deg | Average 0-Deg cd/sm | Average 45-Deg cd/sm | Average 90-Deg cd/sm |
|---|---|---|---|
| 45 | 9755 | 6140 | 5491 |
| 55 | 9272 | 5254 | 4765 |
| 65 | 8452 | 4384 | 4107 |
| 75 | 6532 | 3478 | 3507 |
| 85 | 2635 | 2754 | 2966 |

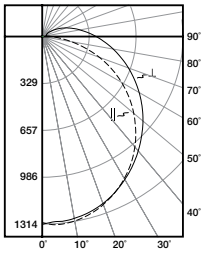


## 4SLSTP4040DD-UNV

Electronic Driver

Linear LED 4000K

Spacing criterion: (II) 1.27 x mounting height, (⊥) 1.29 x mounting height

Lumens: 4760

Input Watts: 43.5W

Efficacy: 109.4 lm/W

Test Report: 4SLSTP4040DD-UNV.IES

### Candlepower

| Angle | Along II | 45° | Across ⊥ |
|---|---|---|---|
| 0 | 1307 | 1307 | 1307 |
| 5 | 1316 | 1304 | 1297 |
| 10 | 1300 | 1289 | 1282 |
| 15 | 1271 | 1264 | 1258 |
| 20 | 1229 | 1229 | 1224 |
| 25 | 1178 | 1183 | 1179 |
| 30 | 1117 | 1128 | 1128 |
| 35 | 1048 | 1062 | 1072 |
| 40 | 969 | 991 | 1011 |
| 45 | 880 | 913 | 947 |
| 50 | 789 | 833 | 882 |
| 55 | 689 | 748 | 812 |
| 60 | 586 | 666 | 741 |
| 65 | 475 | 581 | 670 |
| 70 | 358 | 497 | 600 |
| 75 | 240 | 417 | 530 |
| 80 | 128 | 344 | 464 |
| 85 | 41 | 280 | 401 |
| 90 | 1 | 222 | 343 |

### Coefficients of Utilization

Effective floor cavity reflectance 20%

| rc | 80% | | | | 70% | | | | 50% | | | 30% | | | 10% | | | 0% |
|---|---|---|---|---|---|---|---|---|---|---|---|---|---|---|---|---|---|---|
| rw | 70 | 50 | 30 | 10 | 70 | 50 | 30 | 10 | 50 | 30 | 10 | 50 | 30 | 10 | 50 | 30 | 10 | 0 |
| RCR | | | | | | | | | | | | | | | | | | |
| 0 | 117 | 117 | 117 | 117 | 113 | 113 | 113 | 113 | 106 | 106 | 106 | 100 | 100 | 100 | 94 | 94 | 94 | 91 |
| 1 | 105 | 99 | 94 | 89 | 101 | 96 | 91 | 87 | 90 | 86 | 83 | 84 | 81 | 78 | 79 | 77 | 74 | 72 |
| 2 | 94 | 85 | 78 | 71 | 91 | 82 | 75 | 70 | 77 | 72 | 67 | 73 | 68 | 64 | 68 | 64 | 61 | 58 |
| 3 | 86 | 74 | 65 | 58 | 82 | 72 | 64 | 57 | 67 | 61 | 55 | 63 | 58 | 53 | 60 | 55 | 51 | 48 |
| 4 | 78 | 65 | 56 | 49 | 75 | 63 | 55 | 48 | 60 | 52 | 46 | 56 | 50 | 45 | 53 | 48 | 43 | 41 |
| 5 | 72 | 58 | 49 | 42 | 69 | 56 | 48 | 41 | 53 | 46 | 40 | 50 | 44 | 39 | 47 | 42 | 37 | 35 |
| 6 | 66 | 52 | 43 | 36 | 63 | 51 | 42 | 36 | 48 | 40 | 35 | 45 | 39 | 34 | 43 | 37 | 33 | 30 |
| 7 | 61 | 47 | 38 | 32 | 59 | 46 | 37 | 31 | 43 | 36 | 30 | 41 | 35 | 30 | 39 | 33 | 29 | 27 |
| 8 | 57 | 43 | 34 | 28 | 55 | 42 | 34 | 28 | 40 | 32 | 27 | 38 | 31 | 26 | 36 | 30 | 26 | 24 |
| 9 | 53 | 39 | 31 | 25 | 51 | 38 | 30 | 25 | 37 | 29 | 24 | 35 | 28 | 24 | 33 | 27 | 23 | 21 |
| 10 | 50 | 36 | 28 | 23 | 48 | 35 | 28 | 23 | 34 | 27 | 22 | 32 | 26 | 22 | 31 | 25 | 21 | 19 |

### Zonal Lumen Summary

| Zone | Lumens | % Fixture |
|---|---|---|
| 0-30 | 1021 | 21.5 |
| 0-40 | 1682 | 35.3 |
| 0-60 | 3053 | 64.1 |
| 0-90 | 4328 | 90.9 |
| 0-180 | 4760 | 100.0 |

### Luminance Data

| Angle in Deg | Average 0-Deg cd/sm | Average 45-Deg cd/sm | Average 90-Deg cd/sm |
|---|---|---|---|
| 45 | 20094 | 12212 | 10812 |
| 55 | 19395 | 10476 | 9413 |
| 65 | 18147 | 8821 | 8140 |
| 75 | 14972 | 7149 | 6987 |
| 85 | 7595 | 5711 | 5976 |

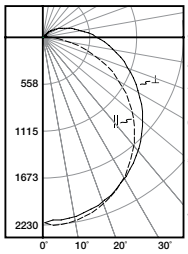


## 8SLSTP8040DD-UNV

Electronic Driver

Linear LED 4000K

Spacing criterion: (II) 1.28 x mounting height, (⊥) 1.30 x mounting height

Lumens: 8176

Input Watts: 71W

Efficacy:115 lm/W

Test Report: 8SLSTP8040DD-UNV.IES

### Candlepower

| Angle | Along II | 45° | Across ⊥ |
|---|---|---|---|
| 0 | 2200 | 2200 | 2200 |
| 5 | 2226 | 2188 | 2174 |
| 10 | 2200 | 2164 | 2151 |
| 15 | 2151 | 2123 | 2115 |
| 20 | 2082 | 2064 | 2060 |
| 25 | 1995 | 1989 | 1991 |
| 30 | 1892 | 1898 | 1912 |
| 35 | 1770 | 1789 | 1819 |
| 40 | 1638 | 1673 | 1722 |
| 45 | 1490 | 1543 | 1618 |
| 50 | 1330 | 1407 | 1507 |
| 55 | 1166 | 1271 | 1391 |
| 60 | 987 | 1129 | 1271 |
| 65 | 801 | 990 | 1154 |
| 70 | 604 | 850 | 1038 |
| 75 | 401 | 718 | 923 |
| 80 | 219 | 598 | 813 |
| 85 | 71 | 491 | 708 |
| 90 | 4 | 389 | 606 |

### Coefficients of Utilization

Effective floor cavity reflectance 20%

| rc | 80% | | | | 70% | | | | 50% | | | 30% | | | 10% | | | 0% |
|---|---|---|---|---|---|---|---|---|---|---|---|---|---|---|---|---|---|---|
| rw | 70 | 50 | 30 | 10 | 70 | 50 | 30 | 10 | 50 | 30 | 10 | 50 | 30 | 10 | 50 | 30 | 10 | 0 |
| RCR | | | | | | | | | | | | | | | | | | |
| 0 | 117 | 117 | 117 | 117 | 113 | 113 | 113 | 113 | 106 | 106 | 106 | 99 | 99 | 99 | 93 | 93 | 93 | 90 |
| 1 | 104 | 99 | 94 | 89 | 100 | 95 | 91 | 87 | 89 | 85 | 82 | 83 | 80 | 78 | 78 | 76 | 74 | 71 |
| 2 | 94 | 85 | 77 | 71 | 90 | 82 | 75 | 69 | 77 | 71 | 66 | 72 | 67 | 63 | 67 | 64 | 60 | 57 |
| 3 | 85 | 74 | 65 | 58 | 82 | 71 | 63 | 57 | 67 | 60 | 55 | 63 | 57 | 52 | 59 | 54 | 50 | 47 |
| 4 | 78 | 65 | 56 | 49 | 75 | 63 | 54 | 48 | 59 | 52 | 46 | 56 | 49 | 44 | 52 | 47 | 43 | 40 |
| 5 | 71 | 58 | 48 | 42 | 68 | 56 | 47 | 41 | 53 | 45 | 39 | 50 | 43 | 38 | 47 | 41 | 37 | 34 |
| 6 | 66 | 52 | 43 | 36 | 63 | 50 | 42 | 35 | 48 | 40 | 34 | 45 | 38 | 33 | 42 | 37 | 32 | 30 |
| 7 | 61 | 47 | 38 | 32 | 58 | 46 | 37 | 31 | 43 | 36 | 30 | 41 | 34 | 29 | 39 | 33 | 28 | 26 |
| 8 | 57 | 43 | 34 | 28 | 54 | 42 | 33 | 28 | 39 | 32 | 27 | 37 | 31 | 26 | 35 | 30 | 25 | 23 |
| 9 | 53 | 39 | 31 | 25 | 51 | 38 | 30 | 25 | 36 | 29 | 24 | 34 | 28 | 23 | 33 | 27 | 23 | 21 |
| 10 | 49 | 36 | 28 | 23 | 48 | 35 | 28 | 22 | 33 | 27 | 22 | 32 | 26 | 21 | 30 | 25 | 21 | 19 |

### Zonal Lumen Summary

| Zone | Lumens | % Fixture |
|---|---|---|
| 0-30 | 1724 | 21.1 |
| 0-40 | 2842 | 34.8 |
| 0-60 | 5168 | 63.2 |
| 0-90 | 7359 | 90.0 |
| 0-180 | 8176 | 100.0 |

### Luminance Data

| Angle in Deg | Average 0-Deg cd/sm | Average 45-Deg cd/sm | Average 90-Deg cd/sm |
|---|---|---|---|
| 45 | 16652 | 10222 | 9228 |
| 55 | 15921 | 8802 | 8055 |
| 65 | 14631 | 7411 | 7002 |
| 75 | 11606 | 6055 | 6076 |
| 85 | 5307 | 4909 | 5268 |

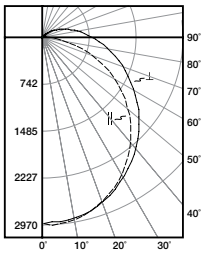


## 8SLSTP11040DD-UNV

Electronic Driver

Linear LED 4000K

Spacing criterion: (II) 1.26 x mounting height, (⊥) 1.28 x mounting height

Lumens: 10476

Input Watts: 83.4W

Efficacy: 126 lm/W

Test Report: 8SLSTP11040DD-UNV.IES

### Candlepower

| Angle | Along II | 45° | Across ⊥ |
|---|---|---|---|
| 0 | 2941 | 2941 | 2941 |
| 5 | 2957 | 2913 | 2925 |
| 10 | 2913 | 2876 | 2888 |
| 15 | 2838 | 2819 | 2934 |
| 20 | 2740 | 2736 | 2750 |
| 25 | 2612 | 2626 | 2643 |
| 30 | 2470 | 2499 | 2523 |
| 35 | 2302 | 2349 | 2391 |
| 40 | 2123 | 2186 | 2255 |
| 45 | 1922 | 2008 | 2101 |
| 50 | 1713 | 1825 | 1949 |
| 55 | 1494 | 1636 | 1792 |
| 60 | 1265 | 1451 | 1628 |
| 65 | 1021 | 1263 | 1464 |
| 70 | 769 | 1076 | 1309 |
| 75 | 514 | 905 | 1155 |
| 80 | 272 | 747 | 1011 |
| 85 | 83 | 609 | 875 |
| 90 | 2 | 485 | 747 |

### Coefficients of Utilization

Effective floor cavity reflectance 20%

| rc | 80% | | | | 70% | | | | 50% | | | 30% | | | 10% | | | 0% |
|---|---|---|---|---|---|---|---|---|---|---|---|---|---|---|---|---|---|---|
| rw | 70 | 50 | 30 | 10 | 70 | 50 | 30 | 10 | 50 | 30 | 10 | 50 | 30 | 10 | 50 | 30 | 10 | 0 |
| RCR | | | | | | | | | | | | | | | | | | |
| 0 | 117 | 117 | 117 | 117 | 113 | 113 | 113 | 113 | 106 | 106 | 106 | 100 | 100 | 100 | 94 | 94 | 94 | 91 |
| 1 | 105 | 99 | 94 | 89 | 101 | 96 | 91 | 87 | 90 | 86 | 83 | 84 | 81 | 79 | 79 | 77 | 75 | 72 |
| 2 | 94 | 85 | 78 | 71 | 91 | 83 | 76 | 70 | 77 | 72 | 67 | 73 | 68 | 64 | 68 | 65 | 61 | 58 |
| 3 | 86 | 74 | 66 | 59 | 82 | 72 | 64 | 57 | 68 | 61 | 55 | 64 | 58 | 53 | 60 | 55 | 51 | 48 |
| 4 | 78 | 66 | 56 | 49 | 75 | 64 | 55 | 48 | 60 | 52 | 47 | 56 | 50 | 45 | 53 | 48 | 43 | 41 |
| 5 | 72 | 58 | 49 | 42 | 69 | 57 | 48 | 41 | 53 | 46 | 40 | 51 | 44 | 39 | 48 | 42 | 38 | 35 |
| 6 | 66 | 52 | 43 | 36 | 64 | 51 | 42 | 36 | 48 | 41 | 35 | 46 | 39 | 34 | 43 | 37 | 33 | 31 |
| 7 | 61 | 47 | 38 | 32 | 59 | 46 | 38 | 32 | 44 | 36 | 31 | 41 | 35 | 30 | 39 | 34 | 29 | 27 |
| 8 | 57 | 43 | 34 | 28 | 55 | 42 | 34 | 28 | 40 | 33 | 27 | 38 | 31 | 27 | 36 | 30 | 26 | 24 |
| 9 | 53 | 40 | 31 | 26 | 51 | 39 | 31 | 25 | 37 | 30 | 25 | 35 | 29 | 24 | 33 | 28 | 23 | 21 |
| 10 | 50 | 36 | 28 | 23 | 48 | 36 | 28 | 23 | 34 | 27 | 22 | 32 | 26 | 22 | 31 | 25 | 21 | 19 |

### Zonal Lumen Summary

| Zone | Lumens | % Fixture |
|---|---|---|
| 0-30 | 2284 | 21.8 |
| 0-40 | 3749 | 35.8 |
| 0-60 | 6761 | 64.5 |
| 0-90 | 9534 | 91.0 |
| 0-180 | 10476 | 100.0 |

### Luminance Data

| Angle in Deg | Average 0-Deg cd/sm | Average 45-Deg cd/sm | Average 90-Deg cd/sm |
|---|---|---|---|
| 45 | 21477 | 13298 | 11981 |
| 55 | 20401 | 11328 | 10379 |
| 65 | 18652 | 9456 | 8882 |
| 75 | 14847 | 7637 | 7605 |
| 85 | 6211 | 6092 | 6513 |

## ORDERING INFORMATION

| Catalog # | UPC | Master Carton (2 units) UPC | Length | CCT (K) | Delivered Lumens | Watts | Efficacy (lm/W) | Controls | Input Current (A) 120V | Input Current (A) 277V |
|---|---|---|---|---|---|---|---|---|---|---|
| 2SLSTP1040DD-120V | 80083705771 | 80083713363 | 2 | 4000 | 1250 | 11 | 113 | Phase Cut Dim to 10% | 0.09 | – |
| 2SLSTP2040DD-120V | 80083705788 | 80083713370 | 2 | 4000 | 2510 | 23 | 111 | Phase Cut Dim to 10% | 0.19 | – |
| 4SLSTP2040DD-120V | 80083705795 | 80083713387 | 4 | 4000 | 2579 | 23 | 114 | Phase Cut Dim to 10% | 0.19 | – |
| 4SLSTP4040DD-120V | 80083705801 | 80083713394 | 4 | 4000 | 4474 | 40 | 112 | Phase Cut Dim to 10% | 0.33 | – |
| 2SLSTP2035DD-UNV | 80083814763 | 80083814770 | 2 | 3500 | 2498 | 23 | 110 | 0-10V Dim to 10% | 0.19 | 0.08 |
| 2SLSTP2040DD-UNV | 80083807826 | 80083807833 | 2 | 4000 | 2510 | 23 | 111 | 0-10V Dim to 10% | 0.19 | 0.08 |
| 4SLSTP2040DD-UNV | 80083705818 | 80083713400 | 4 | 4000 | 2410 | 21 | 113 | 0-10V Dim to 10% | 0.18 | 0.08 |
| 4SLSTP4035DD-UNV | 80083807765 | 80083807772 | 4 | 3500 | 4695 | 41 | 115 | 0-10V Dim to 10% | 0.34 | 0.15 |
| 4SLSTP4040DD-UNV | 80083705825 | 80083713417 | 4 | 4000 | 4760 | 44 | 109 | 0-10V Dim to 10% | 0.36 | 0.16 |
| 4SLSTP5535DD-UNV | 80083807802 | 80083807819 | 4 | 3500 | 5620 | 49 | 114 | 0-10V Dim to 10% | 0.41 | 0.18 |
| 4SLSTP5540DD-UNV | 80083807789 | 80083807796 | 4 | 4000 | 5845 | 49 | 119 | 0-10V Dim to 10% | 0.41 | 0.18 |
| 8SLSTP11035DD-UNV | 80083807703 | 80083807710 | 8 | 3500 | 10322 | 83 | 124 | 0-10V Dim to 10% | 0.7 | 0.3 |
| 8SLSTP11040DD-UNV | 80083807680 | 80083807697 | 8 | 4000 | 10464 | 83 | 125 | 0-10V Dim to 10% | 0.7 | 0.3 |
| 8SLSTP8035DD-UNV | 80083804368 | 80083804375 | 8 | 3500 | 8064 | 71 | 114 | 0-10V Dim to 10% | 0.59 | 0.26 |
| 8SLSTP8040DD-UNV | 80083814787 | 80083814794 | 8 | 4000 | 8176 | 71 | 115 | 0-10V Dim to 10% | 0.59 | 0.26 |
| 4SLSTP4040CS | 80083807741 | 80083807758 | 4 | 4000 | 4835 | 41 | 118 | 0-10V Dim to 10% and simple occupancy sensor | 0.34 | 0.15 |
| 8SLSTP8040CS | 80083807727 | 80083807734 | 8 | 4000 | 8304 | 72 | 115 | 0-10V Dim to 10% and simple occupancy sensor | 0.6 | 0.26 |
| 8SL8040 | 80083807925 | 80083807932 | 8 | 4000 | 8176 | 71 | 115 | 0-10V Dim to 10% | 0.62 | 0.27 |
| 92SL8040 | 80083807956 | 80083802876 | 92" | 4000 | 7866 | 74 | 106 | 0-10V Dim to 10% | 0.62 | 0.27 |

## ACCESSORIES (ORDER SEPARATELY) NOT FOR USE WITH 92SL8040

### ROW ALIGNER 8' - 8'

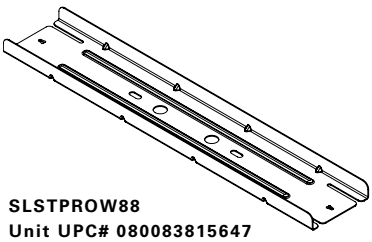

**SLSTPROW88**
**Unit UPC# 080083815647**
**Master Carton UPC# 080083815654**
**(50 per Master)**

### ROW ALIGNER 8' - 4'

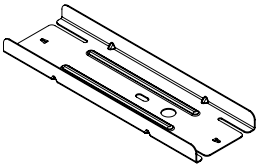

**SLSTPROW842**
**Unit UPC# 080083815661**
**Master Carton UPC# 080083815678**
**(100 per Master)**

**AYC-CHAIN/SET**=36" Hanging Chain Set w/V Hooks
**TOGGLE-10**=10' Suspension Aircraft Cable Kit (specify if another length needed)
**SCF-12-B**=12" Fixed Stem Set (specify if another length needed)
**2SLSTPLNS**=2 ft. Replacement Lens
**4SLSTPLNS**=4 ft. Replacement Lens
**8SLSTPLNS**=8 ft. Replacement Lens

## SENSOR COVERAGE ("CS" SKU DESIGNATION)

### SENSOR COVERAGE PATTERN TOP VIEW

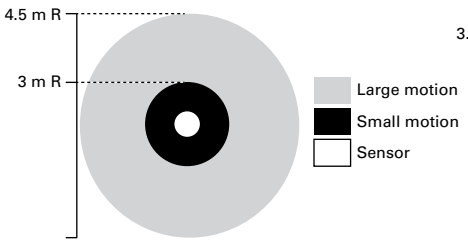


### SENSOR COVERAGE PATTERN SIDE VIEW

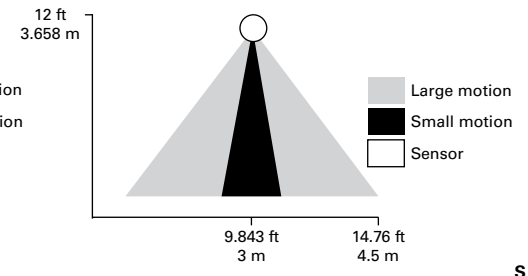


### LIGHT OUTPUT VERSUS TIME

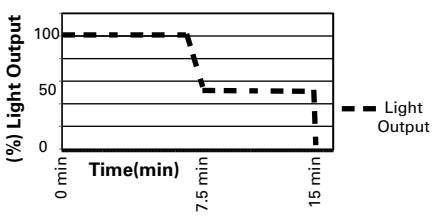


## SHIPPING DATA

| Catalog Base | Wt. | Units per Pallet |
|---|---|---|
| 2SLSTP | 2.8 lbs. | 144 |
| 4SLSTP | 4.6 lbs. | 72 |
| 8SLSTP | 9 lbs. | 45 |

Powering Business Worldwide

**Eaton**
1121 Highway 74 South
Peachtree City, GA 30269
P: 770-486-4800
www.eaton.com/lighting

Specifications and dimensions subject to change without notice.

# HALO

## DESCRIPTION

Ideal for task, accent, office, cove, and utility, under and above cabinet lighting display, the Halo Undercabinet low-profile design delivers maximum energy savings and life with easy installation. The integrated driver design allows 120V direct to the fixture for easy installation. Fixtures are available in 9", 18", 24", 36" and 48" lengths, the Halo system can be configured to fit almost anywhere. Each unit has an integrated on-off switch. Smooth dimming down to 5% using a standard dimmer*. Combination of direct wire to the fixture and connector cables provide for installation flexibility. Minimum Color Rendering Index (CRI) of 90 in 2700K, 3000K and 4000K color temperatures.

| | | |
|---|---|---|
| Catalog # | HU1024D930P | Type: ALJ-07 |
| Project | Aloft | Revision Date: |
| Comments | | Date |
| Prepared by | Kathleen Kenny | |

## SPECIFICATION FEATURES

**Even Light Distribution**
Specialized optical system consisting of tightly clustered proximity phosphor LEDs, advanced optical chamber coatings and lens materials resulting in soft illumination with very high efficiency. These fixtures are ideal for task lighting over glossy surfaces with no distracting shadow patterns.

**Wiring Flexibility**
Use any combination of three different wiring methods: Bring flexible conduit or Romex directly to either end of any size fixture. Conduit connector and romex strain relief hardware is included with each fixture. Utilize the available plug in connectors (sold separately) to link additional fixtures to the circuit or continue with flex conduit or romex (See instructions sheets for more detail).

**Durable Low Profile Housing**
Heavy gauge aluminum housing and color matched end caps with a 3/4" overall height.

**Two Fastener Mounting**
Each unit is secured directly to the mounting surface with just two fasteners keeping installation costs low. Can be mounted in horizontal and vertical orientations.

**Continuous Runs**
Link any combination of fixtures up to 450 W total load using available connectors.

**Optional Accessories**
Optional splice box has a connection port on each side to allow for runs in either or both directions. Includes Romex/ ½" conduit connector. Various connector cable options provide flexibility of mounting location.

**Finish Options**
Fixtures and accessories are available in both White (P) and Matte Black (MB) finishes.

**Electronic Driver**
Electronic driver provides full light output, flicker free and noise free operation.

**Labels**
- cULus listed
- Can be used to meet IECC, ASHRAE commercial and residential standards
- ENERGY STAR® qualified
- FCC

HU10P

HU10MB

## HU10

**Integrated Driver LED Undercabinet**

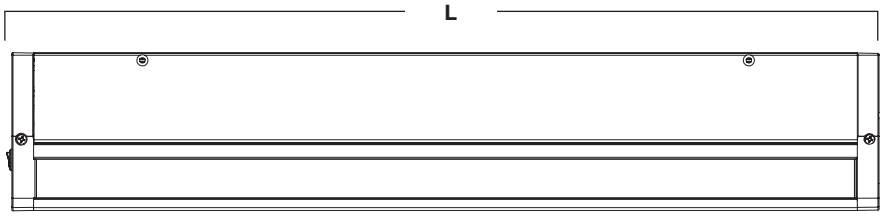


| Size Description | 9 in. Nominal | 18 in. Nominal | 24 in. Nominal | 36 in. Nominal | 48 in. Nominal |
|---|---|---|---|---|---|
| Length "L" | 8.98" [228.1mm] | 16.55" [420.4mm] | 23.98" [609.1mm] | 32.44" [824mm] | 47.18" [1,198.4mm] |

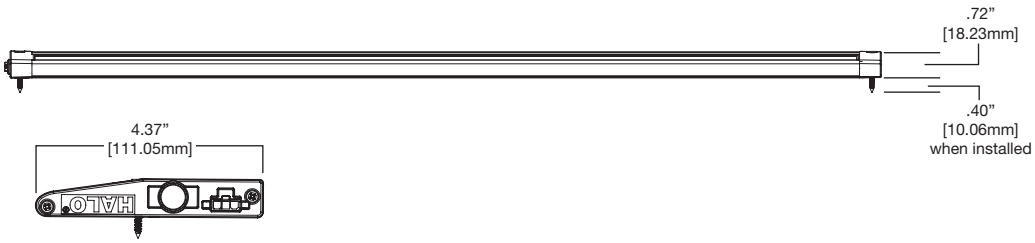


## ENERGY DATA

**Power Factor:** >0.99
**THD:** <10%
**Color Temperature:**
2700K, 3000, 4000K
**Color Rendering Index:** 90
**Nominal Lumens/Ft:** 330

ENERGY STAR

Can be used for IECC International Energy Conservation Code High Efficacy Compliance

T24 Can be used to comply with California Title 24 High Efficacy requirements
T20 Certified to California Title 20 Appliance Database

Qualified and compliant. Refer to ENERGY STAR® Qualified Products List for listings. Can be used to comply with California Title 24 High Efficacy requirements. Certified to California Title 20 Appliance Efficiency Database.

## ORDERING INFORMATION

**SAMPLE NUMBER:** HU1009D930P (9" Dimmable Fixture, 90 CRI, 3000 K, White Finish)

| Family | Length | Dimming | Lens | CRI | Color Temperature | Finish | Accessories |
|---|---|---|---|---|---|---|---|
| **HU10** =Halo Integrated Driver Undercabinet | **09**=9"<br>**18**=18"<br>**24**=24"<br>**36**=36"<br>**48**=48" | **D**=Dimmable* | **[Blank]**=Frosted | **9**=90 CRI | **27**=2700K<br>**30**=3000K<br>**40**=4000K | **P**=White<br>**MB**=Matte Black | **HU101**=3" Daisy Chain Connector<br>**HU102**=6" Daisy Chain Connector<br>**HU103**=24" Daisy Chain Connector<br>**HU104**=120" Daisy Chain Connector<br>**HU105**=48" Power Cord<br>**HU107**=1-1/2" Male-to-Male Connector<br>**HU109**=Splice Box<br>**HU1010**=12" Daisy Chain Connector<br>**HU1011**=18" Daisy Chain Connector<br>**HU10MS**=Master Switch |

*See our website for dimmer compatibility guide - www.cooperlighting.com

## CONNECTORS

**HU101**
3" Daisy Chain Connector

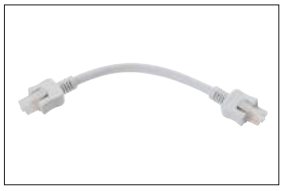

**HU102**
6" Daisy Chain Connector

**HU1010**
12" Daisy Chain Connector

**HU1011**
18" Daisy Chain Connector

**HU103**
24" Daisy Chain Connector

**HU104**
120" Daisy Chain Connector

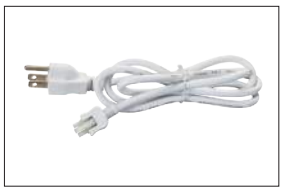

**HU105**
48" Power Cord

**HU109**
Splice Box

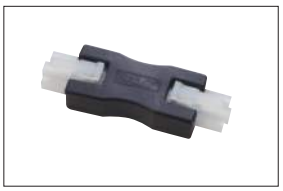

**HU107**
1-1/2" Male-to-Male Connector

**Finish: P** = White; **MB** = Matte Black **Example:** HU101P = 3" Daisy Chain Connector, White

## PHOTOMETRY

### Fixture Application Illustration

*MOUNTING HEIGHT 24"*

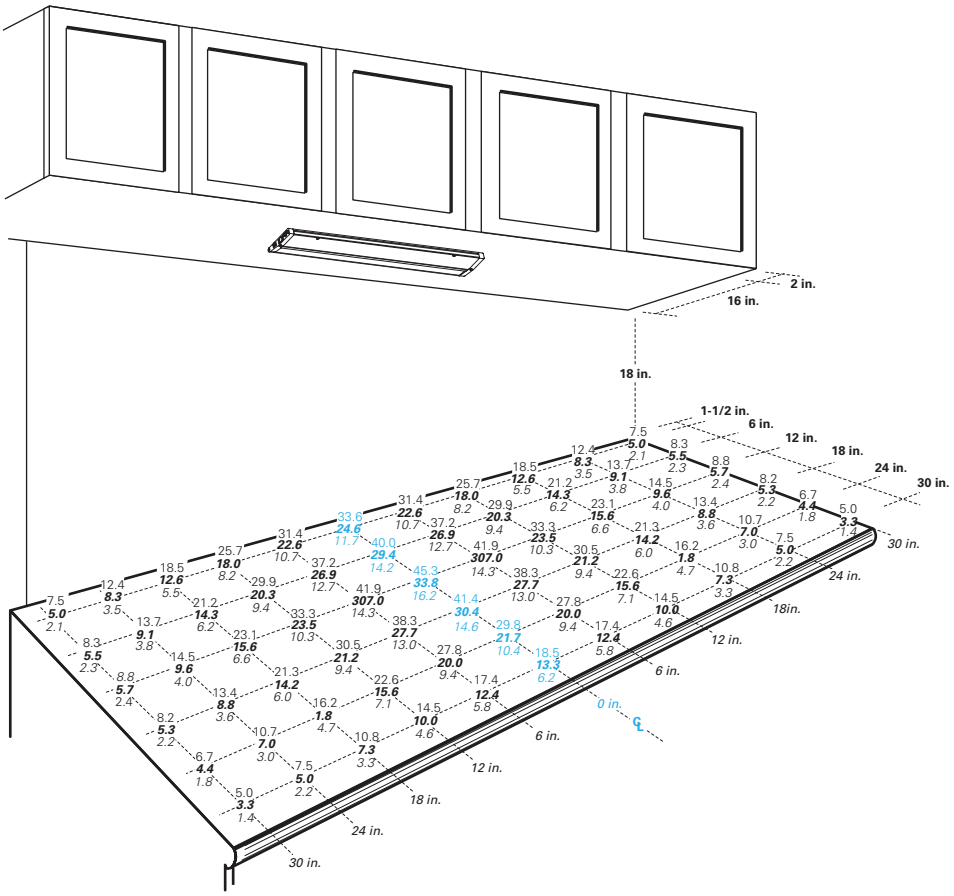


Top Number
Report: HU1024D930.IES

**Middle Number**
Report: HU1018D930.IES

*Bottom Number*
Report: HU1009D930.IES

Countertop 16" x 30"

Point By Point Illumination Scale is Exaggerated on Fixture Application and Mounting.

**15" Mounting Height**

Top Number Report - HU1024D930.IES

Middle Number Report - HU1018D930.IES

Bottom Number Report - HU1009D930.IES

| | | | | | | | | | | | |
|---|---|---|---|---|---|---|---|---|---|---|---|
| 5.6 | 11.1 | 19.8 | 31.8 | 42.2 | 46.2 | 42.2 | 31.8 | 19.8 | 11.1 | 5.6 | |
| 3.6 | 7.1 | 12.8 | 21.8 | 30.9 | 35.0 | 30.9 | 21.8 | 12.8 | 7.1 | 3.6 | 1-1/2 in |
| 1.5 | 2.9 | 5.3 | 9.6 | 14.8 | 17.5 | 14.8 | 9.6 | 5.3 | 2.9 | 1.5 | |
| 6.5 | 13.0 | 25.3 | 43.6 | 60.3 | 66.6 | 60.3 | 43.6 | 25.3 | 13.0 | 6.5 | |
| 4.1 | 8.1 | 15.9 | 29.3 | 44.5 | 51.2 | 44.5 | 29.3 | 15.9 | 8.1 | 4.1 | 6 in |
| 1.6 | 3.2 | 6.3 | 12.4 | 21.2 | 26.2 | 21.2 | 12.4 | 6.3 | 3.2 | 1.6 | |
| 6.9 | 14.5 | 31.1 | 59.5 | 86.1 | 95.5 | 86.1 | 59.5 | 31.1 | 14.5 | 6.9 | |
| 4.2 | 8.7 | 18.8 | 39.1 | 64.4 | 75.8 | 64.4 | 39.1 | 18.8 | 8.7 | 4.2 | 12 in |
| 1.6 | 3.3 | 7.0 | 15.4 | 30.3 | 39.8 | 30.3 | 15.4 | 7.0 | 3.3 | 1.6 | |
| 6.1 | 12.7 | 27.2 | 51.6 | 74.4 | 82.6 | 74.4 | 51.6 | 27.2 | 12.7 | 6.1 | |
| 3.7 | 7.5 | 16.2 | 33.5 | 56.9 | 64.6 | 56.9 | 33.5 | 16.2 | 7.5 | 3.7 | 18 in |
| 1.4 | 2.9 | 6.1 | 13.4 | 26.0 | 34.0 | 26.0 | 13.4 | 6.1 | 2.9 | 1.4 | |
| 4.4 | 8.6 | 16.4 | 28.0 | 38.5 | 42.5 | 38.5 | 28.0 | 16.4 | 8.6 | 4.4 | |
| 2.7 | 5.2 | 10.2 | 18.6 | 28.1 | 32.3 | 28.1 | 18.6 | 10.2 | 5.2 | 2.7 | 24 in |
| 1.1 | 2.1 | 4.1 | 7.9 | 13.3 | 16.2 | 13.3 | 7.9 | 4.1 | 2.1 | 1.1 | |
| 2.9 | 4.9 | 8.3 | 12.5 | 16.2 | 17.6 | 16.2 | 12.5 | 8.3 | 4.9 | 2.9 | |
| 1.8 | 3.1 | 5.3 | 8.5 | 11.6 | 13.0 | 11.6 | 8.5 | 5.3 | 3.1 | 1.8 | 30 in |
| 0.7 | 1.3 | 2.2 | 3.8 | 5.5 | 6.3 | 5.5 | 3.8 | 2.2 | 1.3 | 0.7 | |

**18" Mounting Height**

Top Number Report - HU1024D930.IES

Middle Number Report - HU1018D930.IES

Bottom Number Report - HU1009D930.IES

| | | | | | | | | | | | |
|---|---|---|---|---|---|---|---|---|---|---|---|
| 6.5 | 12.2 | 20.3 | 30.9 | 39.8 | 43.3 | 39.8 | 30.9 | 20.3 | 12.2 | 6.5 | |
| 4.3 | 7.9 | 13.4 | 21.4 | 29.0 | 32.3 | 29.0 | 21.4 | 13.4 | 7.9 | 4.3 | 1-1/2 in |
| 1.7 | 3.3 | 5.7 | 9.5 | 13.8 | 15.8 | 13.8 | 9.5 | 5.7 | 3.3 | 1.7 | |
| 7.5 | 14.1 | 24.9 | 39.6 | 52.6 | 57.5 | 52.6 | 39.6 | 24.9 | 14.1 | 7.5 | |
| 4.8 | 9.0 | 16.2 | 27.2 | 38.5 | 43.5 | 38.5 | 27.2 | 16.2 | 9.0 | 4.8 | 6 in |
| 2.0 | 3.6 | 6.7 | 11.8 | 18.3 | 21.7 | 18.3 | 11.8 | 6.7 | 3.6 | 2.0 | |
| 8.0 | 15.3 | 28.8 | 48.6 | 66.4 | 73.1 | 66.4 | 48.6 | 28.8 | 15.3 | 8.0 | |
| 5.0 | 9.5 | 18.4 | 33.1 | 49.3 | 56.5 | 49.3 | 33.1 | 18.4 | 9.5 | 5.0 | 12 in |
| 2.0 | 3.8 | 7.3 | 13.9 | 23.2 | 28.4 | 23.2 | 13.9 | 7.3 | 3.8 | 2.0 | |
| 7.2 | 13.7 | 25.7 | 43.1 | 58.7 | 64.6 | 58.7 | 43.1 | 25.7 | 13.7 | 7.2 | |
| 4.5 | 8.5 | 16.2 | 29.0 | 43.0 | 49.2 | 43.0 | 29.0 | 16.2 | 8.5 | 4.5 | 18 in |
| 1.8 | 3.4 | 6.4 | 12.2 | 20.4 | 24.9 | 20.4 | 12.2 | 6.4 | 3.4 | 1.8 | |
| 5.5 | 9.9 | 17.2 | 27.0 | 35.7 | 38.9 | 35.7 | 27.0 | 17.2 | 9.9 | 5.5 | |
| 3.5 | 6.2 | 11.1 | 18.3 | 25.9 | 29.1 | 25.9 | 18.3 | 11.1 | 6.2 | 3.5 | 24 in |
| 1.4 | 2.5 | 4.6 | 8.1 | 12.2 | 14.3 | 12.2 | 8.1 | 4.6 | 2.5 | 1.4 | |
| 3.8 | 6.2 | 9.8 | 14.2 | 17.8 | 19.3 | 17.8 | 14.2 | 9.8 | 6.2 | 3.8 | |
| 2.4 | 4.0 | 6.5 | 9.7 | 12.8 | 14.1 | 12.8 | 9.7 | 6.5 | 4.0 | 2.4 | 30 in |
| 1.0 | 1.7 | 2.8 | 4.4 | 6.0 | 6.8 | 6.0 | 4.4 | 2.8 | 1.7 | 1.0 | |

# Metalux

## DESCRIPTION

SWLED is a versatile LED surface or wall mount luminaire which can be used in a broad range of commercial and industrial applications. This series provides customers with a high quality luminaire utilizing the latest LED, solid state lighting and electronic driver technology for optimal performance and maximized energy efficiency. Offered with three different lens distributions and three different lens options which provides uniform light distribution that is an ideal choice for general purpose lighting where customers want to move away from traditional fluorescent solutions.

| | | |
|---|---|---|
| Catalog # | 4SWLED-LD4-48HL | Type: ALJ-08 |
| Project | Aloft | Revision Date: |
| Comments | | Date |
| Prepared by | Kathleen Kenny, National Accounts 678-447-5208 | |

## SPECIFICATION FEATURES

**Construction**
Housing consists of die formed cold rolled steel with decorative white opaque injection molded end plates. Reflector/channel wireway cover secured by fasteners for easy wireway access. Channel back has numerous KO's for easy installation.

**Controls**
The SWLED is Powered by Fifth Light, with a standard 0-10V continuous dimming driver that works with any 0-10V control/ dimmer. Combine with energy saving products like occupancy sensors, daylighting controls and lighting relay panels to maximize energy savings. In addition, the SWLED can include a factory-installed integrated sensor system for occupancy and daylight dimming control and manual control from an optional handheld remote. Or, specify the Digital Addressable Lighting Interface (DALI) drivers (consult factory for 1% dimming), for use with Fifth Light controls. See ordering information for details on all three options.

**Electrical**
Long-Life LED system coupled with electrical driver to deliver optimal performance. LED's available in 3500K, 4000K or 5000K with a typical CRI 85. Projected life is 60,000 hours at 70% lumen output. Electronic drivers are available for 120-277V applications. A 0-10V dimming driver is standard.

**Emergency Battery Pack Option**
Optional 120v-277v integral emergency battery pack is available in 7-watts or 14-watts to meet critical life-safety lighting requirements. The 90-minute batteries provide constant power to the LED system, ensuring code-compliance. A test switch/indicator button can be tested safely from the ground using a laser pointer, while the patented EZ Key prevents accidental discharge of the battery during construction. See ordering information for details.

**Finish**
Highly reflective post painted finish (PAF) standard offering customers the optimal finish and handling. Additionally, each housing is treated in a multistage iron phosphate pretreatment, insuring maximum bonding and rust inhibitor.

**Shielding**
Specially designed LED lens blends and linear optics allows us to offer three different lens versions - LC (clear), LN (Semi-Frost with narrow distribution) and LW (full frost with wide distribution). This lenses provide different lighting distribution allowing customers to choice between smooth even illumination. Lens is securely held in place by removable injection molded white end caps that can be easily removed for installation and maintenance.

**Installation**
Fixture may be surface (wall or ceiling) and suspended mounted. See accessories below for ordering information.

**Compliance**
Modules are UL recognized components and indoor luminaires are cULus listed for up to 40ºC ambient environments, RoHS compliant, and LED modules comply with IESNA LM-79 and LM-80 standards. DesignLights Consortium™ Qualified and classified for DLC Standard, refer to www.designlights.org for details.

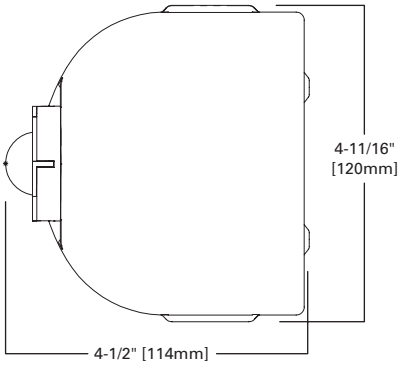

**SWLED**
LED

Surface and Wall LED

powered by fifthlight technology

engineer 2016 PRODUCT OF THE YEAR FINALISTS

## MOUNTING DATA

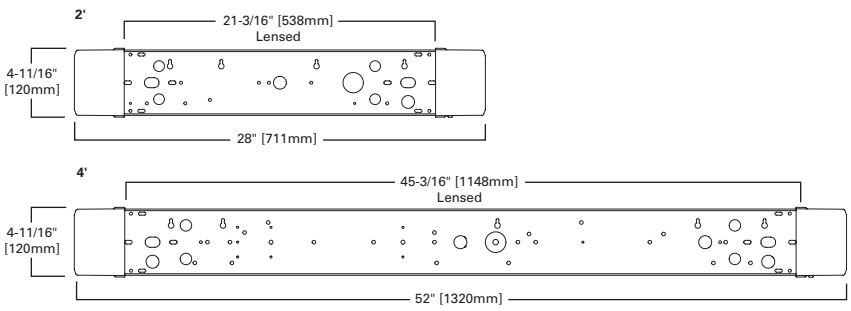


## CERTIFICATION DATA

cULus - 1598
Damp Location Listed
LM79/LM80 Compliant
ROHS Compliant
DesignLights Consortium™ Qualified
NOM Compliant

LINEAR DISCONNECT
Safe and convenient means of disconnecting power

ISO SYSTEMS CERTIFIED

EATON
Powering Business Worldwide

## WATTAGE

| Lens Type | Lumen Type | Length | Catalog Logic | Nominal Lumens | Wattage | lm/W |
|---|---|---|---|---|---|---|
| Full Frost (LW) | Standard | 2 ft. | 2SWLED-LD4-8SL-LW-UNV-L8XX-CD1-SVPD2-U | 800 | 10.1 | 105 |
| Full Frost (LW) | Standard | 2 ft. | 2SWLED-LD4-16SL-LW-UNV-L8XX-CD1-SVPD2-U | 1600 | 18.9 | 99.5 |
| Full Frost (LW) | Standard | 2 ft. | 2SWLED-LD4-20SL-LW-UNV-L8XX-CD1-SVPD2-U | 2000 | 23.5 | 92 |
| Full Frost (LW) | High | 2 ft. | 2SWLED-LD4-24HL-LW-UNV-L8XX-CD1-SVPD2-U | 2400 | 24.9 | 94.5 |
| Full Frost (LW) | High | 2 ft. | 2SWLED-LD4-28HL-LW-UNV-L8XX-CD1-SVPD2-U | 2800 | 29.1 | 89.5 |
| Full Frost (LW) | Standard | 4 ft. | 4SWLED-LD4-16SL-LW-UNV-L8XX-CD1-SVPD2-U | 1500 | 12.8 | 116.7 |
| Full Frost (LW) | Standard | 4 ft. | 4SWLED-LD4-20SL-LW-UNV-L8XX-CD1-SVPD2-U | 2000 | 17.6 | 113.6 |
| Full Frost (LW) | Standard | 4 ft. | 4SWLED-LD4-28SL-LW-UNV-L8XX-CD1-SVPD2-U | 2800 | 25.6 | 109.6 |
| Full Frost (LW) | Standard | 4 ft. | 4SWLED-LD4-32SL-LW-UNV-L8XX-CD1-SVPD2-U | 3200 | 30 | 101.7 |
| Full Frost (LW) | Standard | 4 ft. | 4SWLED-LD4-36SL-LW-UNV-L8XX-CD1-SVPD2-U | 3600 | 35.2 | 102.1 |
| Full Frost (LW) | Standard | 4 ft. | 4SWLED-LD4-40SL-LW-UNV-L8XX-CD1-SVPD2-U | 4000 | 40.4 | 99.1 |
| Full Frost (LW) | High | 4 ft. | 4SWLED-LD4-44HL-LW-UNV-L8XX-CD1-SVPD2-U | 4400 | 39.2 | 112.2 |
| Full Frost (LW) | High | 4 ft. | 4SWLED-LD4-48HL-LW-UNV-L8XX-CD1-SVPD2-U | 4800 | 43.3 | 110.9 |
| Full Frost (LW) | High | 4 ft. | 4SWLED-LD4-52HL-LW-UNV-L8XX-CD2-SVPD2-U | 5200 | 46.8 | 111.0 |
| Full Frost (LW) | High | 4 ft. | 4SWLED-LD4-56HL-LW-UNV-L8XX-CD2-SVPD2-U | 5600 | 51.1 | 109.6 |
| Full Frost (LW) | High | 4 ft. | 4SWLED-LD4-60HL-LW-UNV-L8XX-CD2-SVPD2-U | 6000 | 55.5 | 108.1 |
| Full Frost (LW) | High | 4 ft. | 4SWLED-LD4-64HL-LW-UNV-L8XX-CD2-SVPD2-U | 6400 | 60 | 106.7 |
| Full Frost (LW) | High | 4 ft. | 4SWLED-LD4-72HL-LW-UNV-L8XX-CD2-SVPD2-U | 7200 | 69 | 104.3 |

## PHOTOMETRICS

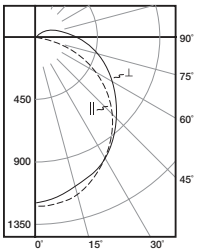


**4SWLED-LD4-40SL-LW-UNV-L835-CD1**

Electronic Driver

Linear LED 3500K

Spacing criterion: (II) 1.2 x mounting height, (⊥) 1.2 x mounting height

Lumens: 4087

Input Watts: 42.5W

Efficacy: 96.2 lm/W

Test Report: 4SWLED-LD4-40SL-LW-UNV-L835-CD1.IES

**Candlepower**

| Angle | Along II | 45° | Across ⊥ |
|---|---|---|---|
| 0 | 1194 | 1194 | 1194 |
| 5 | 1203 | 1188 | 1173 |
| 10 | 1184 | 1159 | 1142 |
| 15 | 1153 | 1123 | 1110 |
| 20 | 1110 | 1080 | 1074 |
| 25 | 1058 | 1032 | 1031 |
| 30 | 996 | 978 | 983 |
| 35 | 926 | 918 | 933 |
| 40 | 849 | 855 | 878 |
| 45 | 766 | 786 | 816 |
| 50 | 678 | 713 | 754 |
| 55 | 588 | 639 | 690 |
| 60 | 495 | 564 | 626 |
| 65 | 400 | 491 | 563 |
| 70 | 302 | 419 | 503 |
| 75 | 207 | 352 | 445 |
| 80 | 125 | 291 | 390 |
| 85 | 55 | 236 | 337 |
| 90 | 4 | 188 | 285 |

**Coefficients of Utilization**

| | Effective floor cavity reflectance | | | | | | | | | | | | | | | | | |
|---|---|---|---|---|---|---|---|---|---|---|---|---|---|---|---|---|---|---|
| rc | 80% | | | | 70% | | | | 50% | | | 30% | | | 10% | | | 0% |
| rw | 70 | 50 | 30 | 10 | 70 | 50 | 30 | 10 | 50 | 30 | 10 | 50 | 30 | 10 | 50 | 30 | 10 | 0 |
| RCR | | | | | | | | | | | | | | | | | | |
| 0 | 117 | 117 | 117 | 117 | 113 | 113 | 113 | 113 | 106 | 106 | 106 | 100 | 100 | 100 | 94 | 94 | 94 | 91 |
| 1 | 105 | 99 | 94 | 90 | 101 | 96 | 91 | 87 | 90 | 86 | 83 | 85 | 82 | 79 | 80 | 77 | 75 | 72 |
| 2 | 95 | 85 | 78 | 71 | 91 | 83 | 76 | 70 | 78 | 72 | 67 | 73 | 68 | 64 | 69 | 65 | 61 | 59 |
| 3 | 86 | 74 | 66 | 59 | 82 | 72 | 64 | 58 | 68 | 61 | 55 | 64 | 58 | 53 | 60 | 56 | 51 | 49 |
| 4 | 78 | 66 | 56 | 49 | 75 | 64 | 55 | 49 | 60 | 53 | 47 | 57 | 50 | 45 | 54 | 48 | 44 | 41 |
| 5 | 72 | 58 | 49 | 42 | 69 | 57 | 48 | 42 | 54 | 46 | 40 | 51 | 44 | 39 | 48 | 42 | 38 | 35 |
| 6 | 66 | 53 | 43 | 37 | 64 | 51 | 42 | 36 | 48 | 41 | 35 | 46 | 39 | 34 | 44 | 38 | 33 | 31 |
| 7 | 61 | 48 | 39 | 32 | 59 | 46 | 38 | 32 | 44 | 36 | 31 | 42 | 35 | 30 | 40 | 34 | 29 | 27 |
| 8 | 57 | 43 | 35 | 29 | 55 | 42 | 34 | 28 | 40 | 33 | 28 | 38 | 32 | 27 | 36 | 31 | 26 | 24 |
| 9 | 53 | 40 | 31 | 26 | 51 | 39 | 31 | 25 | 37 | 30 | 25 | 35 | 29 | 24 | 34 | 28 | 24 | 22 |
| 10 | 50 | 37 | 29 | 23 | 48 | 36 | 28 | 23 | 34 | 27 | 22 | 33 | 26 | 22 | 31 | 26 | 21 | 20 |

**Zonal Lumen Summary**

| Zone | Lumens | % Fixture |
|---|---|---|
| 0-30 | 905 | 22.1 |
| 0-40 | 1480 | 36.2 |
| 0-60 | 2656 | 65.0 |
| 0-90 | 3738 | 91.5 |
| 0-180 | 4087 | 100.0 |

## ORDERING INFORMATION

**SAMPLE NUMBER: 4SWLED-LD4-40SL-LW-UNV-L840-CD1-SVPD2-U**

**Length**
**2**=2 ft. Length
**4**=4 ft. Length

**Series** [13]
**SWLED**=LED Surface and Wall

**LED Type**
**LD4**=LED 4.0

**LED Lumens Output** [2]
**8SL**=800 [3]
**16SL**=1600 [3]
**20SL**=2000
**24HL**=2400 [3]
**28HL**=2800 [3]
**28SL**=2800 [4]
**32SL**=3200
**36SL**=3600
**40SL**=4000
**44HL**=4400
**48HL**=4800
**52HL**=5200 [12]
**56HL**=5600 [12]
**60HL**=6000 [12]
**64HL**=6400 [12]
**67HL**=6700 [12], [16]
**72HL**=7200 [12], [16]
**78HL**=7800 [12], [16]
**80HL**=8000 [12], [17]

**Optic**
**LC**=Clear Lens
**LN**=Semi-Frost Lens - Narrow
**LW**=Full Frost Lens - Wide

**Voltage**
**347V**=347 Volt [11]
**480V**=480 Volt [11]
**UNV**=Universal Voltage 120-277 [1]
**UNC**=Universal Voltage347/480 [4], [11]

**Emergency** [4], [9]
**EL7W**=7-watt, 120V-277V emergency battery pack installed [5]
**EL14W**=14-watt 120V-277V emergency battery pack installed [5]
**GTD2**=Bodine Generator Transfer Device [18]
**ETS2**=IOTA Emergency Transfer Switch [18]

**CCT**
**L835**=3500K
**L840**=4000K
**L850**=5000K

**Driver Type**
**CD**=0-10V Dimming Driver
**HCD**=0-10V Dimming Driver (1% - 100% Dimming) [11]
**SD**=Step-dim Driver [19], [20]
**5LTD**=Fifth Light (DALI) Driver

**Number of Drivers**
**1**=1 Driver
**2**=2 Drivers

**Options**
**Occupancy Sensor**
**SVPD1**=Integrated occupancy and daylight dimming sensor, 500 sq. ft. coverage [6], [8], [10], [15]
**SVPD2**=Integrated occupancy and daylight dimming sensor, 900 sq. ft. coverage [8], [14], [15]
**SVPD3**=Integrated occupancy and daylight dimming sensor, 1200 sq. ft. coverage [7], [15]

**Packaging**
**U**=Unit Pack

## ACCESSORIES

(Order Separately)
**SCF**=Fixed Stem Set (Specify Length)
**SCS**=Swivel Stem Set (Specify Length)
**SCA**=Adjustable 48" Stem Set
**A1B/Spacer-U**=Spacer 1-1/2" to 2-1/2" from ceiling (Use 2 Per Fixture)
**ISHH-01**=Programming Remote for Integrated Sensor
**ISHH-02**=Personal Control Remote for Integrated Sensor

**NOTES:** [1] Not available when specifying emergencies, voltage must be specific. [2] Nominal lumen output. [3] 2 ft. model. [4] Only available in 4 ft. models. [5] With integral test switch/indicator/laser test. For approximate delivered lumens multiply the lumens per watt of the desired fixture by the wattage of the emergency battery pack (100 lm/W x 7=700 lumens). IES-format photometry for luminaire under emergency operation available. [6] For mounting heights up to 8 ft. [7] For mounting heights up to 30 ft. [8] For mounting heights up to 12 ft. [9] Integral EL battery pack is rated for 35°C. [10] Product configuration meet ADA. [11] Consult factory. [12] Currently not DLC listed, consult factory. [13] DesignLights Consortium™ Qualified and classified for DLC Standard (some models are not DLC qualified), refer to www.design-lights.org for details. [14] For wall mount applications. [15] For use with CD driver only. [16] Lumen value with LN (30% Frost lens). [17] Lumen value with LC (Clear lens). [18] Used to transfer fixture to secondary power source for life-safety operation. When used with a dimming fixture, two devices are required to ensure control is disabled while operating under emergency power. [19] 4 ft. model only. [20] 4000 and above.

Specifications & dimensions subject to change without notice. Consult your Eaton Representative for availability and ordering information.

## SHIPPING DATA

| Catalog No. | Wt. |
|---|---|
| 2SWLED-LD4 | 6 lbs. |
| 4SWLED-LD4 | 12 lbs. |

Powering Business Worldwide

**Eaton**
1121 Highway 74 South
Peachtree City, GA 30269
P: 770-486-4800
www.eaton.com/lighting

Specifications and dimensions subject to change without notice.

## INTEGRATED SENSOR

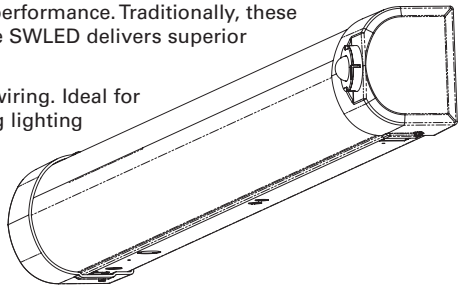

The SWLED with Integrated Sensor technology provides automatic energy savings without sacrificing performance. Traditionally, these types of energy savings required coordination between the luminaire and a lighting control system. The SWLED delivers superior lighting with integrated occupancy and daylighting controls.

Capture the benefits of traditional lighting controls, without complicated coverage planning or special wiring. Ideal for new construction or retrofit, the SWLED delivers automatic ON to an energy saving light level, ensuring lighting is turned OFF when the space is unoccupied.

The integral daylight sensor reduces the need for special daylight zone planning. Each luminaire will automatically adjust the light level based on reflected light beneath the sensor in a closed loop method.

Occupied daylight light levels and unoccupied light levels can be adjusted using the integrated sensor programming remote (Catalog Number: ISHH-01). The integrated sensor personal remote (Catalog Number: ISHH-02) provides code compliant manual raise, lower, ON, OFF control.

The SWLED with Integrated Sensor is easy to install with no special wiring and ensures energy savings out-of-the-box with default control settings.

**How it works:**

- As the user enters the space controlled by the integral sensor, the lighting turns ON to the default daylight level.
- Lighting will remain at that the daylight level until the space is unoccupied. This will start the occupancy timeout period (default 20 minutes).
- If the space remains unoccupied for half of the timeout period, the lighting will automatically reduce to the Energy Saver light level. This adjustable light level is typically half of the occupied daylight level.
- At the end of the timeout period the lighting will go to the unoccupied light level. This adjustable light level uses the OFF default setting.

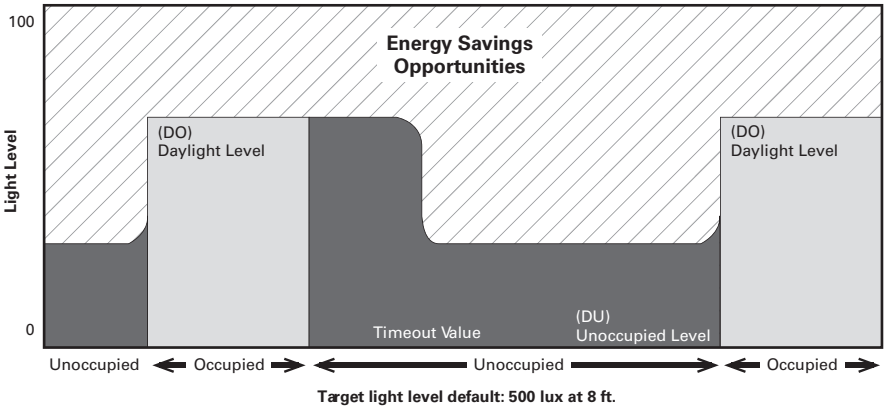


**Target light level default: 500 lux at 8 ft.**

**Coverage Patterns next page**

## SENSOR DETAILS - SWLED

### SVPD1 Coverage Pattern

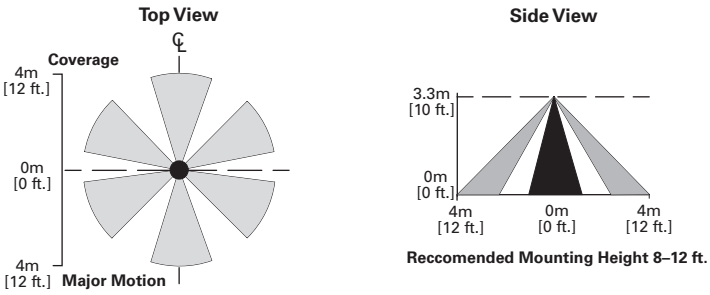


**Reccomended Mounting Height 8–12 ft.**

### SVPD2 Coverage Pattern

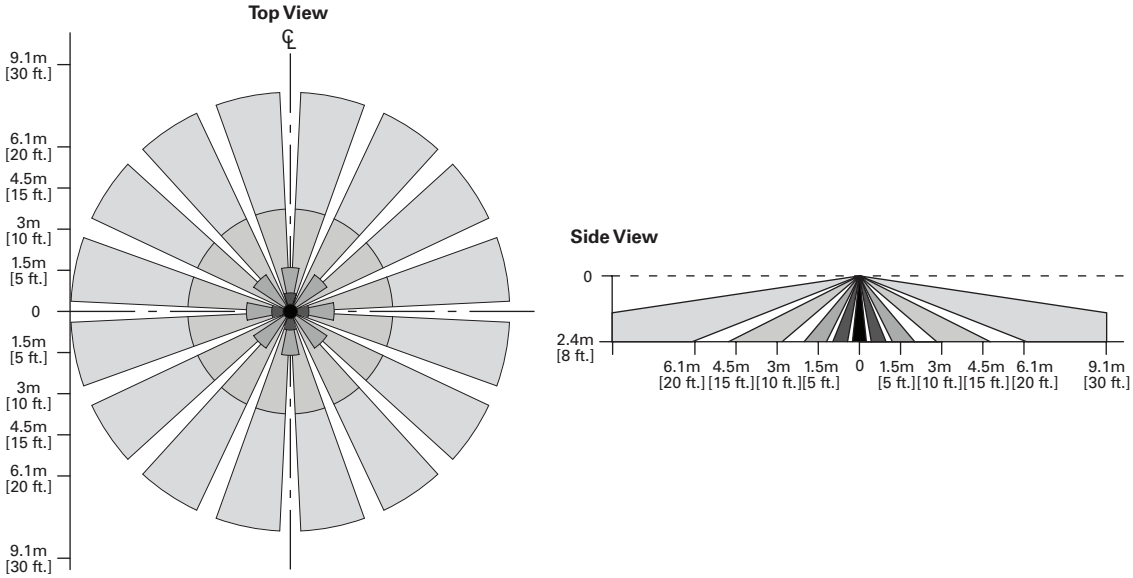


### SVPD3 Coverage Pattern

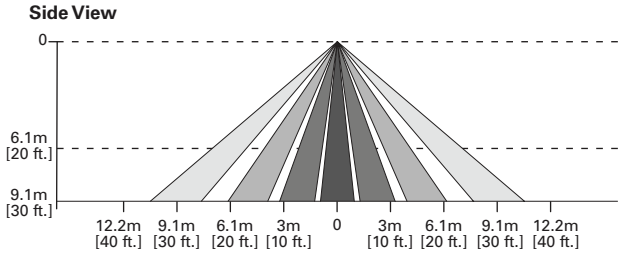


### Optional Remote Controls

**ISHH-01 Programming Remote**

**ISHH-02 Personal Control Remote**



**Eaton**
1121 Highway 74 South
Peachtree City, GA 30269
P: 770-486-4800
www.eaton.com/lighting

Specifications and dimensions subject to change without notice.

# Metalux

## DESCRIPTION

SNLED Lensed is a narrow LED lensed striplight series. This high quality luminaire is dedicated to the latest solid state lighting and electronic driver technology for optimal performance and energy efficiency. This Lensed product is available with three different lens types.

The small size of the SNLED makes it an ideal choice for size restricted architectural applications. The SNLED Series can be the illumination solution in commercial, industrial, retail and residential applications. Fixtures can be used in storage/utility areas, coves, display cases, shops, task and general area lighting.

| | | Type |
|---|---|---|
| Catalog # | 4SNLED-LD4-27SL-LW-UNV-L830-CD1-U | ALJ-13 |
| Project | Aloft | Revision Date: |
| Comments | | Date |
| Prepared by | Katheen Kenny, National Accounts, 678-447-5208, kathleenkenny@eaton.com | |

# SNLED LENSED
LED

Lensed LED Striplight

powered by fifthlight technology

## SPECIFICATION FEATURES

**Construction**
Channel is die formed cold rolled steel with numerous KOs for ease of installation. Groove for Tong Hanger. End plate quickly converts to snap-in channel connector for continuous row alignment. Channel/wireway cover secured with sheet metal screws.

**Controls**
Equipped standard with a 0-10V continuous dimming driver that works with any standard 0-10V control/dimmer. Dimming range is 10% to 100%; varies by control device. Combine with energy-saving products like occupancy sensors, day lighting controls, and lighting relay panels to maximize energy savings. For motion control, reference options for both end and middle of the row applications.

**Electrical**
Long-Life LED system coupled with electronic (120-277V) driver to deliver optimal lighting performance. LED's available in 3000K, 3500K, 4000K, or 5000K with a CRI ≥ 85. Other color temperatures are available. Projected life is 60,000 + hours at 70% lumen output based on TM21. This driver is 0-10V dimming standard.

**Emergency Battery Pack Option**
Optional 120v-277v integral emergency battery pack is available in 7-watts or 14-watts to meet critical life-safety lighting requirements. The 90-minute batteries provide constant power to the LED system, ensuring code-compliance. A test switch/indicator button can be tested safely from the ground using a laser pointer, while the patented EZ Key prevents accidental discharge of the battery during construction. See ordering information for details.

**Finish**
Multistage iron phosphate pretreatment ensures maximum bonding and rust inhibitor. High reflective paint after fabrication, baked white enamel finish is standard.

**Channel/Wireway Cover**
Die formed heavy gauge steel. Tight fit for ease of maintenance.

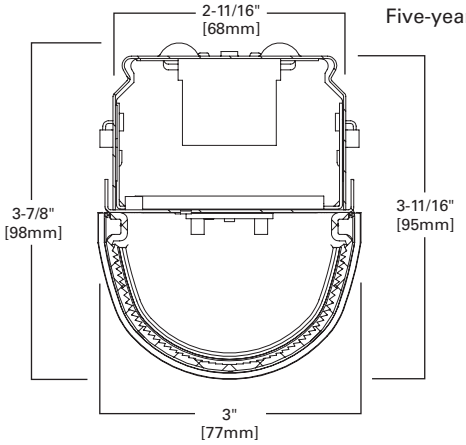


**Shielding**
Offers three different lensed optical distributions. (LC) Clear with linear optical ribs. (LN) Semi-frost for narrow distribution. (LW) Full frost for wide distribution.

**Installation**
Fixture may be surface, pendant, or stem mounted. See accessories below in ordering information.

**Compliance**
Components are UL recognized. Indoor luminaires are cULus listed for 40° C ambient environments, RoHS compliant, damp location listed, and comply with IESNA LM-79. LEDs comply with LM-80 standards. DesignLights Consortium® Qualified. Refer to www.designlights.org Qualified Products List under Family Models for details.

**Warranty**
Five-year warranty.

## MOUNTING DATA

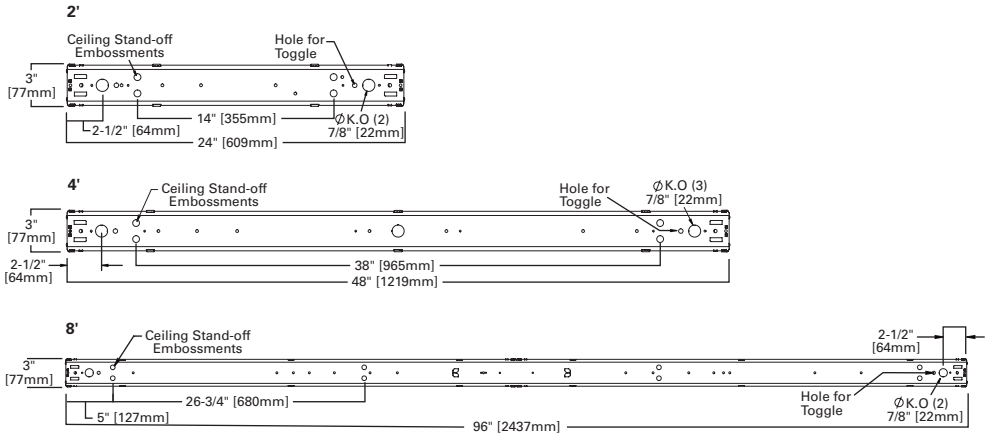


LINEAR DISCONNECT
Safe and convenient means of disconnecting power

Powering Business Worldwide

## WATTAGE

| SNLED Type | Stock* / MTO | Lumen Type | Length | Catalog Logic | Nominal Lumens | Wattage | lm/W |
|---|---|---|---|---|---|---|---|
| Clear Lens (LC) | MTO | Standard | 2 ft. | 2SNLED-LD4-18SL-LC-UNV-L8XX-CD1-U | 1907 | 17 | 105 |
| Clear Lens (LC) | MTO | Standard | 2 ft. | 2SNLED-LD4-22SL-LC-UNV-L8XX-CD1-U | 2325 | 22 | 101 |
| Clear Lens (LC) | MTO | Standard | 2 ft. | 2SNLED-LD4-26SL-LC-UNV-L8XX-CD1-U | 2712 | 23 | 112 |
| Clear Lens (LC) | MTO | Standard | 4 ft. | 4SNLED-LD4-18SL-LC-UNV-L8XX-CD1-U | 2038 | 16 | 111 |
| Clear Lens (LC) | MTO | Standard | 4 ft. | 4SNLED-LD4-22SL-LC-UNV-L8XX-CD1-U | 2301 | 18 | 120 |
| Clear Lens (LC) | Stock | Standard | 4 ft. | 4SNLED-LD4-26SL-LC-UNV-L8XX-CD1-U | 2688 | 22 | 120 |
| Clear Lens (LC) | Stock | Standard | 4 ft. | 4SNLED-LD4-30SL-LC-UNV-L8XX-CD1-U | 3061 | 25 | 120 |
| Clear Lens (LC) | MTO | Standard | 4 ft. | 4SNLED-LD4-34SL-LC-UNV-L8XX-CD1-U | 3431 | 28 | 120 |
| Clear Lens (LC) | MTO | Standard | 4 ft. | 4SNLED-LD4-37SL-LC-UNV-L8XX-CD1-U | 3822 | 32 | 114 |
| Clear Lens (LC) | MTO | Standard | 4 ft. | 4SNLED-LD4-41SL-LC-UNV-L8XX-CD1-U | 4233 | 37 | 112 |
| Clear Lens (LC) | Stock | Standard | 4 ft. | 4SNLED-LD4-46SL-LC-UNV-L8XX-CD1-U | 4615 | 41 | 112 |
| Clear Lens (LC) | MTO | Standard | 4 ft. | 4SNLED-LD4-49SL-LC-UNV-L8XX-CD1-U | 4994 | 46 | 107 |
| Clear Lens (LC) | MTO | Standard | 4 ft. | 4SNLED-LD4-52SL-LC-UNV-L8XX-CD1-U | 5357 | 50 | 104 |
| Clear Lens (LC) | MTO | Standard | 4 ft. | 4SNLED-LD4-56SL-LC-UNV-L8XX-CD1-U | 5714 | 56 | 99 |
| Clear Lens (LC) | MTO | High | 4 ft. | 4SNLED-LD4-60HL-LC-UNV-L8XX-CD1-U | 6115 | 51 | 118 |
| Clear Lens (LC) | MTO | Standard | 8 ft. | 8TSNLED-LD4-60SL-LC-UNV-L8XX-CD1-U | 6122 | 50 | 120 |
| Clear Lens (LC) | MTO | Standard | 8 ft. | 8TSNLED-LD4-68SL-LC-UNV-L8XX-CD1-U | 6863 | 57 | 120 |
| Clear Lens (LC) | Stock | Standard | 8 ft. | 8TSNLED-LD4-75SL-LC-UNV-L8XX-CD1-U | 7643 | 65 | 116 |
| Clear Lens (LC) | Stock | Standard | 8 ft. | 8TSNLED-LD4-83SL-LC-UNV-L8XX-CD1-U | 8466 | 73 | 113 |
| Clear Lens (LC) | MTO | Standard | 8 ft. | 8TSNLED-LD4-90SL-LC-UNV-L8XX-CD2-U | 9230 | 82 | 110 |
| Clear Lens (LC) | MTO | Standard | 8 ft. | 8TSNLED-LD4-98SL-LC-UNV-L8XX-CD2-U | 9988 | 91 | 107 |
| Clear Lens (LC) | MTO | Standard | 8 ft. | 8TSNLED-LD4-105SL-LC-UNV-L8XX-CD2-U | 10714 | 100 | 105 |
| Clear Lens (LC) | MTO | High | 8 ft. | 8SNLED-LD4-130HL-LC-UNV-L8XX-CD1-U | 13000 | 130 | 100 |
| Clear Lens (LC) | MTO | High | 8 ft. | 8SNLED-LD4-170HL-LC-UNV-L8XX-CD1-U | 17460 | 140 | 125 |

| SNLED Type | Stock* / MTO | Lumen Type | Length | Catalog Logic | Nominal Lumens | Wattage | lm/W |
|---|---|---|---|---|---|---|---|
| Semi-Frost Lens (LN) | MTO | Standard | 2 ft. | 2SNLED-LD4-18SL-LN-UNV-L8XX-CD1-U | 1901 | 17 | 105 |
| Semi-Frost Lens (LN) | MTO | Standard | 2 ft. | 2SNLED-LD4-22SL-LN-UNV-L8XX-CD1-U | 2318 | 22 | 101 |
| Semi-Frost Lens (LN) | MTO | Standard | 2 ft. | 2SNLED-LD4-26SL-LN-UNV-L8XX-CD1-U | 2704 | 23 | 116 |
| Semi-Frost Lens (LN) | MTO | High | 2 ft. | 2SNLED-LD4-32HL-LN-UNV-L8XX-CD1-U | 3200 | 32 | 100 |
| Semi-Frost Lens (LN) | MTO | Standard | 4 ft. | 4SNLED-LD4-18SL-LN-UNV-L8XX-CD1-U | 2032 | 16 | 111 |
| Semi-Frost Lens (LN) | MTO | Standard | 4 ft. | 4SNLED-LD4-22SL-LN-UNV-L8XX-CD1-U | 2294 | 18 | 120 |
| Semi-Frost Lens (LN) | Stock | Standard | 4 ft. | 4SNLED-LD4-26SL-LN-UNV-L8XX-CD1-U | 2680 | 22 | 120 |
| Semi-Frost Lens (LN) | Stock | Standard | 4 ft. | 4SNLED-LD4-30SL-LN-UNV-L8XX-CD1-U | 3052 | 25 | 120 |
| Semi-Frost Lens (LN) | MTO | Standard | 4 ft. | 4SNLED-LD4-34SL-LN-UNV-L8XX-CD1-U | 3421 | 28 | 120 |
| Semi-Frost Lens (LN) | MTO | Standard | 4 ft. | 4SNLED-LD4-37SL-LN-UNV-L8XX-CD1-U | 3810 | 32 | 114 |
| Semi-Frost Lens (LN) | MTO | Standard | 4 ft. | 4SNLED-LD4-41SL-LN-UNV-L8XX-CD1-U | 4220 | 37 | 112 |
| Semi-Frost Lens (LN) | Stock | Standard | 4 ft. | 4SNLED-LD4-46SL-LN-UNV-L8XX-CD1-U | 4601 | 41 | 112 |
| Semi-Frost Lens (LN) | MTO | Standard | 4 ft. | 4SNLED-LD4-49SL-LN-UNV-L8XX-CD1-U | 4979 | 46 | 107 |
| Semi-Frost Lens (LN) | MTO | Standard | 4 ft. | 4SNLED-LD4-53SL-LN-UNV-L8XX-CD1-U | 5341 | 50 | 106 |
| Semi-Frost Lens (LN) | MTO | Standard | 4 ft. | 4SNLED-LD4-56SL-LN-UNV-L8XX-CD1-U | 5697 | 56 | 99 |
| Semi-Frost Lens (LN) | MTO | High | 4 ft. | 4SNLED-LD4-60HL-LN-UNV-L8XX-CD1-U | 6096 | 51 | 118 |
| Semi-Frost Lens (LN) | MTO | Standard | 8 ft. | 8TSNLED-LD4-60SL-LN-UNV-L8XX-CD1-U | 6103 | 50 | 120 |
| Semi-Frost Lens (LN) | MTO | Standard | 8 ft. | 8TSNLED-LD4-68SL-LN-UNV-L8XX-CD1-U | 6842 | 57 | 120 |
| Semi-Frost Lens (LN) | Stock | Standard | 8 ft. | 8TSNLED-LD4-75SL-LN-UNV-L8XX-CD1-U | 7620 | 65 | 116 |
| Semi-Frost Lens (LN) | Stock | Standard | 8 ft. | 8TSNLED-LD4-83SL-LN-UNV-L8XX-CD1-U | 8441 | 73 | 113 |
| Semi-Frost Lens (LN) | MTO | Standard | 8 ft. | 8TSNLED-LD4-91SL-LN-UNV-L8XX-CD2-U | 9202 | 82 | 111 |
| Semi-Frost Lens (LN) | MTO | Standard | 8 ft. | 8TSNLED-LD4-98SL-LN-UNV-L8XX-CD2-U | 9958 | 91 | 107 |
| Semi-Frost Lens (LN) | MTO | Standard | 8 ft. | 8TSNLED-LD4-106SL-LN-UNV-L8XX-CD2-U | 10681 | 100 | 106 |
| Semi-Frost Lens (LN) | MTO | High | 8 ft. | 8TSNLED-LD4-130HL-LN-UNV-L8XX-CD2-U | 13000 | 130 | 100 |
| Semi-Frost Lens (LN) | MTO | High | 8 ft. | 8TSNLED-LD4-170HL-LN-UNV-L8XX-CD2-U | 17100 | 140 | 122 |



**Eaton**
1121 Highway 74 South
Peachtree City, GA 30269
P: 770-486-4800
www.eaton.com/lighting

Specifications and dimensions subject to change without notice.

## WATTAGE

| SNLED Type | Stock* / MTO | Lumen Type | Length | Catalog Logic | Nominal Lumens | Wattage | lm/W |
|---|---|---|---|---|---|---|---|
| Full Frost Lens (LW) | MTO | Standard | 2 ft. | 2SNLED-LD4-16SL-LW-UNV-L8XX-CD1-U | 1702 | 17 | 99 |
| Full Frost Lens (LW) | MTO | Standard | 2 ft. | 2SNLED-LD4-20SL-LW-UNV-L8XX-CD1-U | 2075 | 22 | 92 |
| Full Frost Lens (LW) | MTO | Standard | 2 ft. | 2SNLED-LD4-23SL-LW-UNV-L8XX-CD1-U | 2421 | 23 | 104 |
| Full Frost Lens (LW) | MTO | Standard | 4 ft. | 4SNLED-LD4-16SL-LW-UNV-L8XX-CD1-U | 1819 | 16 | 111 |
| Full Frost Lens (LW) | MTO | Standard | 4 ft. | 4SNLED-LD4-20SL-LW-UNV-L8XX-CD1-U | 2054 | 18 | 109 |
| Full Frost Lens (LW) | Stock | Standard | 4 ft. | 4SNLED-LD4-23SL-LW-UNV-L8XX-CD1-U | 2399 | 22 | 111 |
| Full Frost Lens (LW) | Stock | Standard | 4 ft. | 4SNLED-LD4-27SL-LW-UNV-L8XX-CD1-U | 2732 | 25 | 108 |
| Full Frost Lens (LW) | MTO | Standard | 4 ft. | 4SNLED-LD4-30SL-LW-UNV-L8XX-CD1-U | 3062 | 28 | 106 |
| Full Frost Lens (LW) | MTO | Standard | 4 ft. | 4SNLED-LD4-33SL-LW-UNV-L8XX-CD1-U | 3411 | 32 | 105 |
| Full Frost Lens (LW) | MTO | Standard | 4 ft. | 4SNLED-LD4-37SL-LW-UNV-L8XX-CD1-U | 3778 | 37 | 101 |
| Full Frost Lens (LW) | Stock | Standard | 4 ft. | 4SNLED-LD4-41SL-LW-UNV-L8XX-CD1-U | 4119 | 41 | 100 |
| Full Frost Lens (LW) | MTO | Standard | 4 ft. | 4SNLED-LD4-44SL-LW-UNV-L8XX-CD1-U | 4457 | 46 | 96 |
| Full Frost Lens (LW) | MTO | Standard | 4 ft. | 4SNLED-LD4-47SL-LW-UNV-L8XX-CD1-U | 4781 | 50 | 94 |
| Full Frost Lens (LW) | MTO | Standard | 4 ft. | 4SNLED-LD4-50SL-LW-UNV-L8XX-CD1-U | 5100 | 56 | 89 |
| Full Frost Lens (LW) | MTO | High | 4 ft. | 4SNLED-LD4-54HL-LW-UNV-L8XX-CD1-U | 5458 | 51 | 106 |
| Full Frost Lens (LW) | MTO | Standard | 8 ft. | 8TSNLED-LD4-54SL-LW-UNV-L8XX-CD1-U | 5464 | 50 | 108 |
| Full Frost Lens (LW) | MTO | Standard | 8 ft. | 8TSNLED-LD4-61SL-LW-UNV-L8XX-CD1-U | 6125 | 57 | 107 |
| Full Frost Lens (LW) | Stock | Standard | 8 ft. | 8TSNLED-LD4-67SL-LW-UNV-L8XX-CD1-U | 6822 | 65 | 104 |
| Full Frost Lens (LW) | Stock | Standard | 8 ft. | 8TSNLED-LD4-74SL-LW-UNV-L8XX-CD1-U | 7556 | 73 | 101 |
| Full Frost Lens (LW) | MTO | Standard | 8 ft. | 8TSNLED-LD4-81SL-LW-UNV-L8XX-CD2-U | 8238 | 82 | 99 |
| Full Frost Lens (LW) | MTO | Standard | 8 ft. | 8TSNLED-LD4-88SL-LW-UNV-L8XX-CD2-U | 8915 | 91 | 96 |
| Full Frost Lens (LW) | MTO | Standard | 8 ft. | 8TSNLED-LD4-95SL-LW-UNV-L8XX-CD2-U | 9562 | 100 | 95 |
| Full Frost Lens (LW) | MTO | High | 8 ft. | 8TSNLED-LD4-110HL-LW-UNV-L8XX-CD2-U | 11000 | 130 | 84 |
| Full Frost Lens (LW) | MTO | High | 8 ft. | 8TSNLED-LD4-150HL-LW-UNV-L8XX-CD2-U | 15300 | 140 | 121 |

* Stocked in either 3500K or 4000K

## PHOTOMETRICS

**See website for IES/photometric files**

## LUMEN MAINTENANCE

| Ambient Temperature | TM-21 Lumen Maintenance (12,000 hours) | Theoretical L70 (Hours) |
|---|---|---|
| 25°C | 92.55% | 273,000 |

Max Ambient temp in compliance with CSA: 40°C



**Eaton**
1121 Highway 74 South
Peachtree City, GA 30269
P: 770-486-4800
www.eaton.com/lighting

Specifications and dimensions subject to change without notice.

## ORDERING INFORMATION

**SAMPLE NUMBER: 4SNLED-LD4-46SL-LN-UNV-L835-CD1-U**

**2**=2' Length
**4**=4' Length
**8T**=8' Length

**Series**
**SNLED**=Commercial LED Striplight [9]

**Lamp Type**
**LD4**=LED 4.0

**LED Lumens Output** [2]

**Stocked Lumen Packages - LC**
**26SL**=2600 [8]
**30SL**=3000
**46SL**=4600
**75SL**=7500 [14]
**83SL**=8300 [14]

**MTO Lumen Packages - LC**
**18SL**=1800 [8]
**22SL**=2200
**34SL**=3400
**37SL**=3700
**41SL**=4100
**49SL**=4900
**52SL**=5200
**56SL**=5600
**60SL**=6000 [14]
**60HL**=6000 [1], [14]
**68SL**=6800 [14]
**90SL**=9000 [3], [14]
**98SL**=9800 [3], [14]
**105SL**=10,500 [3], [14]
**130HL**=13,000 [3], [12], [14]
**170HL**=17,000 [3], [12], [14]

**Stocked Lumen Packages - LN**
**26SL**=2600 [8]
**30SL**=3000
**32HL**=3200
**46SL**=4600
**75SL**=7500 [14]
**83SL**=8300 [14]

**MTO Lumen Packages - LN**
**18SL**=1800 [8]
**22SL**=2200 [8]
**34SL**=3400
**37SL**=3700
**41SL**=4100
**49SL**=4900
**53SL**=5300
**56SL**=5600
**60SL**=6000
**60HL**=6000 [1], [14]
**68SL**=6800 [14]
**91SL**=9100 [3], [14]
**98SL**=9800 [3], [14]
**106SL**=10,600 [3], [14]
**130HL**=13,000 [3], [14]
**170HL**=17,000 [3], [14]

**Stocked Lumen Packages - LW**
**23SL**=2300 [8]
**27SL**=2700
**41SL**=4100
**67SL**=6700 [14]
**74SL**=7400 [14]

**MTO Lumen Packages - LW**
**16SL**=1600 [8]
**20SL**=2000
**30SL**=3000
**33SL**=3300
**37SL**=3700
**44SL**=4400
**47SL**=4700
**50SL**=5000
**54SL**=5400
**54HL**=5400 [1], [14]
**61SL**=6100 [14]
**81SL**=8100 [3], [14]
**88SL**=8800 [3], [14]
**95SL**=9500 [3], [14]
**110HL**=11,000 [3], [14]
**150HL**=15,300 [3], [14]

**Optic**
**LC**=Clear Lens
**LN**=Semi-Frost Lens - Narrow
**LW**=Full Frost Lens - Wide

**Voltage**
**UNV**=Universal Voltage 120-277
**347**=347V
**480**=480V [4]

**Options**

**Emergency**
**EL7W**=7-watt, 120V-277V emergency battery pack installed [7], [4]
**EL14W**=14-watt 120V-277V emergency battery pack installed [7], [4]
**GTD2**=Bodine Generator Transfer Device [13]
**ETS2**=IOTA Emergency Transfer Switch [13]

**Wiring**
**PI/CPI**=Plug-in Option

**Motion Sensors**
**LB-ERMS360**=360° Low Bay Motion Sensor - End of Row
**LB-MRMS360**=360° Low Bay Motion Sensor - Middle of Row
**HB-ERMS360**=360° High Bay Motion Sensor - End of Row [5]
**HB-MRMS360**=360° High Bay Motion Sensor - Middle of Row [5]

**CCT**
**L830**=3000K
**L835**=3500K
**L840**=4000K
**L850**=5000K

**Driver Type**
**CD**=0-10V Dimming Driver (10% - 100% Dimming)
**HCD**=0-10V Dimming Driver (1% - 100% Dimming) [11]
**SD**=Step-dim (Bi Level) [4], [10]
**5LTD**=Fifth Light (DALI) Driver [4], [6]

**Number of Drivers**
**1**=1 Driver
**2**=2 Drivers

**Packaging**
**U**=Unit Pack

## ACCESSORIES

(Order Separately)
**AYC-Chain/Set**=36" Chain Hanger (Use 1 set per fixture)
**SCF**=Fixed Stem Set (Specify Length)
**SCS**=Swivel Stem Set (Specify Length)
**SCA**=Adjustable 48" Stem Set
**EYE CHAIN SET/3FT**=Eye Bolt Chain (Use 1 set per fixture)
**WG/SNF-2FT**=2' Wire Guard
**WG/SNF-4FT**=4' Wire Guard
**A1B/Spacer-U**=Spacer 1-1/2" to 2-1/2" from ceiling (Use 2 per fixture)
**TOGGLE**=Single Toggle No. 2 (Specify Length)
**Y-TOGGLE**=Y Toggle No. 2 (Specify Length)

**NOTES:** [1] 4 ft. only. [2] Nominal lumen values. [3] Two drivers required. [4] 4 ft. and 8 ft. only. [5] Motion Sensor offers dimmability. [6] For a complete listing of Fifth Light products, visit www.eaton.com/lightingsystems [7] With integral test switch/indicator/laser test. For approximate delivered lumens multiply the lumens per watt of the desired fixture by the wattage of the emergency battery pack (100 lm/W x 7=700 lumens). IES-format photometry for luminaire under emergency operation available. [8] 2 ft. and 4 ft. only. [9] DesignLights Consortium™ Qualified and classified for DLC Standard (all lumen packages), refer to www.designlights.org for details. [10] 4100 lumen and above on 4 ft. and 8200 lumen and above on 8 ft. [11] HCD driver option requires two drivers for 6700 – 10,500 lumens. Not available for 13,000 lumens and above. [12] Not currently listed on DLC QPL. [13] Used to transfer fixture to secondary power source for life-safety operation. When used with a dimming fixture, two devices are required to ensure control is disabled while operating under emergency power. [14] 8 ft. only.

Specifications & dimensions subject to change without notice. Consult your Eaton Representative for availability and ordering information.

## SHIPPING DATA

| Length. | Wt. |
|---|---|
| 2 ft. | 4.3 lbs. |
| 4 ft. | 8.2 lbs. |
| 8 ft. | 15.1 lbs. |

Powering Business Worldwide

**Eaton**
1121 Highway 74 South
Peachtree City, GA 30269
P: 770-486-4800
www.eaton.com/lighting

Specifications and dimensions subject to change without notice.

**ALJ-014**
Revision Date:

## Style S315 1:4 Scale

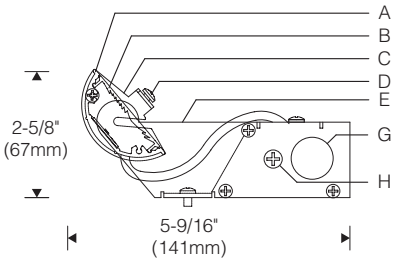


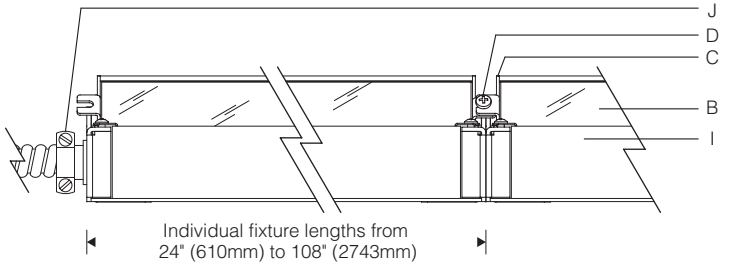

## Optical Assembly 1:2 Scale

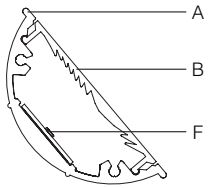


## Cove 1:8 Scale

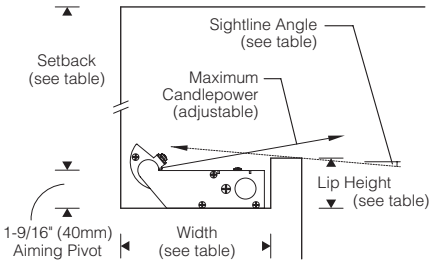


## Cove Dimensions

(maximum candlepower aimed 15° above horizontal)

| | | | |
|---|---|---|---|
| ***Sightline*** | 0° (horiz. cutoff) | 5° | 10° |
| ***Width*** *(inside)* | 6-1/4" (159mm) | 7-1/2" (190mm) | 7-1/2" (190mm) |
| ***Lip*** *(inside)* | 2-5/8" (67mm) | 1-5/8" (41mm) | 1-1/2" (38mm) |
| ***Setback*** | 12" (305mm) min. recommended for 175mA, 18" (457mm) for 350mA; 24" (610mm) for 700mA. | | |

**Note:** Finish interior of cove matte white for best results.

## Specifications

**A** Serviceable extruded aluminum heat sink/ housing

**B** Extruded acrylic beam shaping lens

**C** Stainless steel end plates with interlocking tabs

**D** Rotation locking tab with locking set screw

**E** Aluminum side arm with adjustable mounting tab (fasteners by others)

**F** Constant current LED board

**G** Conduit entry (one each end, conduit and connections by others)

**H** Driver/housing joiner screw (one per fixture)

**I** Extruded aluminum driver housing and drivers

**J** Supply conduit and connectors by others

### Housing and Optic Assembly:

Extruded aluminum heat sink/optic housing. Exterior heat sink anodized for maximum emissivity. Stainless steel end plates. Extruded acrylic refractive semi-diffuse asymmetric beam shaping lens. Extruded aluminum driver housing and removable cover.

### Finish:

Optic assembly – bright anodized aluminum.
Side arms and driver compartment – mill finish aluminum or painted semigloss white for natatorium option. Painted surfaces receive a 6-stage pretreatment process prior to electrostatically applied baked powder enamel.
All hardware – stainless steel.

### Mounting:

Lay-in installation, side arms with mounting tabs can be base or wall mounted (fasteners by others). Luminaires can be mounted individually or joined together to form a continuous row. Optical assembly aiming is adjustable and is fixed in position by rotation locking screws at each side arm. When mounted in a continuous row, assemblies lock together allowing all in the row to be aimed together.

Fixture weight: 1.7 lb/ft (2.5 kg/m).

### Electrical:

Use 90°C wire for supply connections. Integral electronic Class II drivers. For complete driver specifications, see website, reference document **MA-1303**. Driver/wireway compartment includes one conduit entry at each end. Channel cover is removable for access to driver and wiring. Luminaires may be butted end-to-end (connectors by others) for through wiring. Optional #12 AWG prewired modular through wiring with quick connectors. Optional , compatible dimming controls (by others). See website for dimming compatibility and specifications.

### Standard:

UL listed or CSA certified for damp locations.
For natatorium use, specify **0P** or **PK** option.
5 year warranty, maximum ambient temperature 45°C (113°F).

## Features

- *Proprietary refractive lens technology*
- *Asymmetric distribution – uniform surface illumination*
- *Wide lateral distribution – no socket shadows*
- *Fully adjustable and lockable optic assembly*
- *Integral driver with optional pre-wired harness*
- *Low profile – allows smaller cove height*

SC 18.0

## Performance

*Precisely extruded acrylic lens produces an asymmetric distribution ideal for illuminating ceilings evenly.*

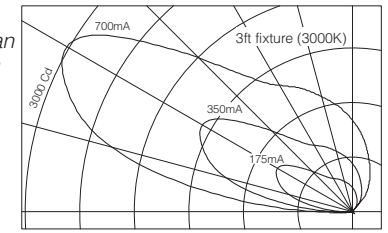


L85(10k) > 60,000 hrs @ 25°C per TM-21

*For LM79 and photometric reports, visit* **thelightingquotient.com**

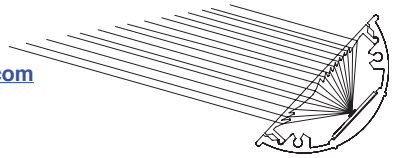

elliptipar®
...there is no equal

*To form a Catalog Number*

| S | 3 | 1 | 5 | - | R | | | | - | S | - | 0 | 0 | - | | - | | | - | | - | | | - | |
|---|---|---|---|---|---|---|---|---|---|---|---|---|---|---|---|---|---|---|---|---|---|---|---|---|---|
| 1 | | | 2 | | | | 3 | | | 4 | | 5 | | 6 | | 7 | | 8 | | 9 | | 10 | | | | |

Project:

Type:

**ALJ-014**

Revision Date:

## 1 Source

**S** = Solid state (LED)

## 2 Style

**315** = Small linear concealed LED with integral driver

## 3 Length / Light Output / Power

| ORDER CODE | LENGTH | LUMENS | INPUT WATTS | NUMBER OF LEDS | DRIVE CURRENT |
|---|---|---|---|---|---|
| **R02G** | 2FT | 1024 | 7 | 72 | 175mA |
| **R02L** | 2FT | 1887 | 14 | 72 | 350mA |
| **R02M** | 2FT | 3677 | 27 | 72 | 700mA |
| **R03G** | 3FT | 1536 | 10 | 108 | 175mA |
| **R03L** | 3FT | 2831 | 20 | 108 | 350mA |
| **R03M** | 3FT | 5516 | 41 | 108 | 700mA |
| **R04G** | 4FT | 2049 | 14 | 144 | 175mA |
| **R04L** | 4FT | 3775 | 27 | 144 | 350mA |
| **R04M** | 4FT | 7355 | 54 | 144 | 700mA |
| **R05G** | 5FT | 2561 | 17 | 180 | 175mA |
| **R05L** | 5FT | 4718 | 34 | 180 | 350mA |
| **R05M** | 5FT | 9193 | 68 | 180 | 700mA |
| **R06G** | 6FT | 3073 | 20 | 216 | 175mA |
| **R06L** | 6FT | 5662 | 41 | 216 | 350mA |
| **R06M** | 6FT | 11032 | 82 | 216 | 700mA |
| **R07G** | 7FT | 3585 | 24 | 252 | 175mA |
| **R07L** | 7FT | 6606 | 48 | 252 | 350mA |
| **R07M** | 7FT | 12871 | 95 | 252 | 700mA |
| **R08G** | 8FT | 4097 | 27 | 288 | 175mA |
| **R08L** | 8FT | 7549 | 54 | 288 | 350mA |
| **R08M** | 8FT | 14709 | 109 | 288 | 700mA |
| **R09G** | 9FT | 4609 | 31 | 324 | 175mA |
| **R09L** | 9FT | 8493 | 61 | 324 | 350mA |
| **R09M** | 9FT | 16548 | 122 | 324 | 700mA |

Based on 3500K/80+CRI. **Click here** for scaled performance table.

## 4 Mounting

**S** = Sidearms with mounting tabs

## 5 Finish

**00** = Anodized optical housing/heat sink; mill finish brackets and remote driver enclosure; stainless steel luminaire hardware (natatorium use option is painted)

**02** = Driver enclosure and mounting brackets finished semi-gloss white, optical housing/heat sink are bright anodized

## 6 Voltage

**M** = 120-277V Universal voltage input

**K** = 347V input

## 7 Option (See Accessories Section for specifications)

**00** = No options

**0K** = Modular through-wire harness with quick connectors

**0P** = Natatorium use; side arms, driver box pretreated and painted semigloss white

**PK** = Natatorium use with through-wire harness

## 8 Destination Requirement

**0** = UL listed or CSA certified for U.S.

**J** = UL listed or CSA certified for Canada

## 9 Color Temperature

**830**= 3000K, 80+ CRI

**835**= 3500K, 80+ CRI

**840**= 4000K, 80+ CRI

**927**= 2700K, 90+ CRI

**930**= 3000K, 90+ CRI

**935**= 3500K, 90+ CRI

**940**= 4000K, 90+ CRI

**Note:** Additional CCT and CRI options are available; consult factory.

## 10 Dimming**

**00** = Non-dimming

**TD** = ERP Tri-Dim forward phase, reverse phase or 0-10V dimming, 100-10% power on forward or reverse phase, 100%-1% on 0-10V, compatible controls by others

**ZX** = 0-10V analog dimming 120-277V or 347V input, dimming range 100%-1%, 0-10V controls by others

**L2** = Lutron Hi-lume LTE 120V input only, dimming range 100%-1%, compatible 2-wire dimming controls by others (see note*)

**EL** = eldoLED SOLOdrive 120-277V input, 0-10V analog dimming 100%-0.1% power (controls by others)

**ED** = eldoLED SOLOdrive 120-277V input, dimming range 100%-0.1%, DALI controls by others

**Dimming range refers to % power input, % light output will vary.

**Refer to Driver Information document MA-1303**

## Adjustable Mounting Feet

The optical assembly is adjustable and lockable, in addition, the S315 is provided with mounting feet that can raise the optical assembly to achieve lower aiming angles.

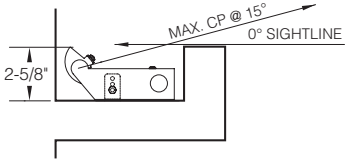


**Standard (low) position** allows peak candlepower to be aimed as low as **15° above horizontal.**

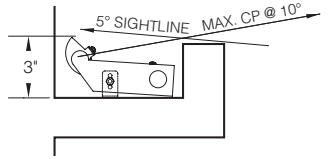


**Middle position** allows peak candlepower to be aimed as low as **10° above horizontal.**

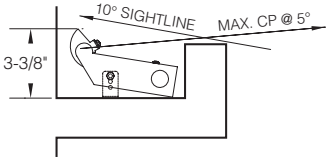


**High position** allows peak candlepower to be aimed as low as **5° above horizontal.**

SC 18.1



**elliptipar** *from* **The Lighting Quotient**
114 Boston Post Road, West Haven, Connecticut 06516, USA
Voice 203.931.4455 • Fax 203.931.4464 • **thelightingquotient.com**

*Certain products illustrated may be covered by applicable patents and patents pending. These specifications supersede all prior publications and are subject to change without notice. Copyright © 2018 Sylvan R. Shemitz Designs, LLC, all rights reserved.*

## DESCRIPTION

- Extruded aluminum housing
- Die-cast aluminum end caps
- Integrated visor option
- Die-formed 94% reflective anodized aluminum reflector
- Electrostatically applied polyester powder coat paint finish
- Hinging doorframe

| | | Type |
|---|---|---|
| Catalog # | | ALK-01 |
| Project | | Revision Date: |
| Comments | | Date |
| Prepared by | | |

## SPECIFICATION FEATURES

**Construction**
Housing is 6063 aluminum extrusions with die-cast aluminum end caps without exposed fasteners. Hinging doorframe for easy access to gasketed lamp compartment, and stainless steel hardware. Optional integrated extruded aluminum cutoff visor.

**Reflector**
Die-formed 94% reflective anodized aluminum.

**Lens**
Indoor: Clear acrylic lens/door assembly is standard. Aluminum doorframe with no lens, prismatic glass lens, or clear glass lens is optional.

**Electrical**
Use 90-degree supply wire. Tungsten - DC Bayonet, Metal Halide - G12 and Fluorescent - GX24q. Ballast is integral to luminaire and includes quick-disconnect to provide a safe, reliable means of disconnecting power to the fixture during service and maintenance.

**Mounting**
Standard canopy mounts over recessed junction box (by others). Support structure by others.

**Finish**
Luminaire housing is finished using electrostatically applied polyester powder coat paint. Consult factory for custom colors.

**Labels**
UL and CUL listed for damp locations.

# ROUNDEL

**Small Integral Individual Linear**

**SUSPENDED**

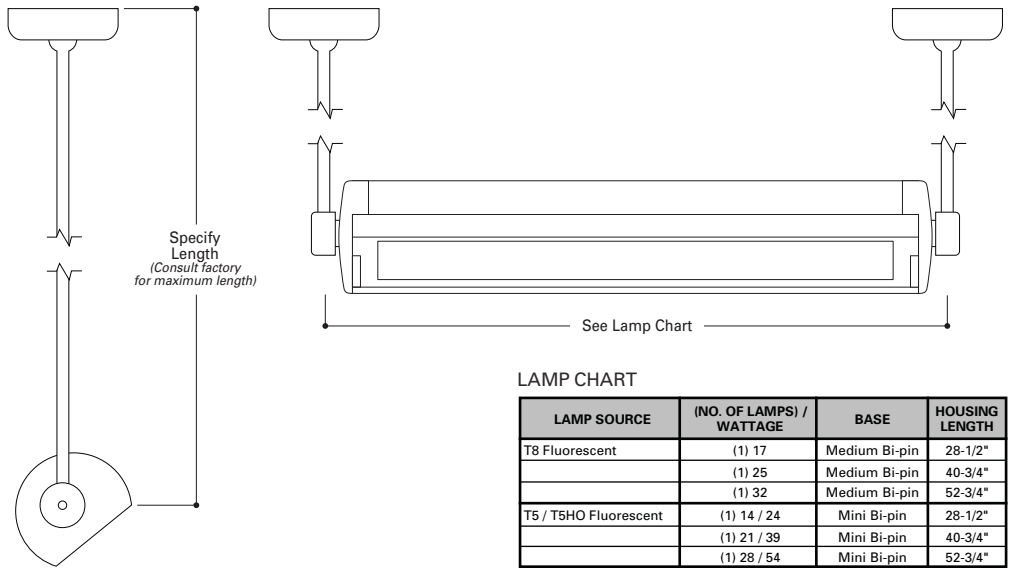


LAMP CHART

| LAMP SOURCE | (NO. OF LAMPS) / WATTAGE | BASE | HOUSING LENGTH |
|---|---|---|---|
| T8 Fluorescent | (1) 17 | Medium Bi-pin | 28-1/2" |
| | (1) 25 | Medium Bi-pin | 40-3/4" |
| | (1) 32 | Medium Bi-pin | 52-3/4" |
| T5 / T5HO Fluorescent | (1) 14 / 24 | Mini Bi-pin | 28-1/2" |
| | (1) 21 / 39 | Mini Bi-pin | 40-3/4" |
| | (1) 28 / 54 | Mini Bi-pin | 52-3/4" |

## ORDERING INFORMATION

**Sample Number: RN-SI-C-1-F-021-120-W-PP12**

**Product**
**RN**: Roundel No Visor
**RS**: Roundel Solid Visor

**Size - In/Outdoor**
**SI**: Small Indoor

**Lens**
**A**: Acrylic[1]
**N**: None[2]
**P**: Micro-Prismatic
**C**: Clear

**Number of Lamps**
**1**: 1 Lamp

**Lamp Type**
**B**: Battery Pack (Remote Mount)
**LF**: Linear Fluorescent

**Wattage**
**014**: 14W (2' N5)
**017**: 17W (2' T8)
**021**: 21W (3' N5)
**024**: 24W (2' T5HO)
**025**: 25W (3' T8)
**028**: 28W (4' N5)
**032**: 32W (4' T8)
**039**: 39W (3' T5HO)
**054**: 54W (4' T5HO)

**Voltage**
**120**: 120V
**277**: 277V
**347**: 347V
**UNV**: Universal

**Finish**
**B**: Bronze
**C**: Custom Color
**K**: Black
**S**: Silver
**W**: White

**Mounting**
**PP12**: Pendant 12"
**PP18**: Pendant 18"
**PP24**: Pendant 24"
**PP30**: Pendant 30"
**PS12**: Pendant Swivel 12"
**PS18**: Pendant Swivel 18"
**PS24**: Pendant Swivel 24"
**PS30**: Pendant Swivel 30"

**Options**
**L45**: 45 Degree Cross Blade Louver
**L25**: 25 Degree Cross Blade Louver

**Notes:** 1 Standard for indoor models. For use with indoor models only.
2 For use with indoor models Only.

# Ametrix

## DESCRIPTION

The ASYX 2.0 second generation of asymmetric lighting is designed for general ambient illumination and accenting architectural features. The luminaire allows for both forward and wide distributions as well four different color temperatures to accommodate any space. The ASYX 2.0 utilizes the patented and highly efficient AccuLED Optics™ system for industry leading performance. IP66 rated and optional natatorium finish.

| | | Type |
|---|---|---|
| Catalog # | ASYX-WM-S2-NT-U-W-L35-1-UNV-W-XX-STD | ALK-04 |
| Project | ALOFT | Revision Date: |
| Comments | | Date |
| Prepared by | Kathleen Kenny, National Accounts, 678-447-5208 kathleenkenny@eaton.cc | |

## SPECIFICATION FEATURES

### Construction
Heavy-wall die cast aluminum end caps with extruded aluminum housing. Housing fins allow for air flow and thermal management. Fixture is rated to 40˚C. Weight: 18 lbs

### Electrical
Standard drivers feature electronic universal voltage (120-277V/ 50-60 Hz), greater than 0.9 power factor, less than 20% harmonic distortion, and ambient temperature range of 40˚C (104˚F) to minimum starting temp of -30˚C (-22˚F). 0-10V dimming standard with DALI option available. Max amp draw @120V is 1.5 Amps.

### LED Optics
ASYX 2.0 luminaire utilizes patented, high efficiency AccuLED Optics with specific optical distributions. Each lens is injection molded for precision, arranged and sealed onto a board substrate. LEDs are industry leading high output with standard product at 93% lumen maintenance at 60,000 hours. Offered in 80+ CRI for 2700K, 3000K, and 3500K CCT, and 70+ CRI for 4000K CCT. The ASYX 2.0 also offers +/- 90˚, or 180˚ rotated optics to adjust distribution for any location. The HSS option provides maximum backlight control.

### Mounting
Die cast adjustable knuckle, bolts to housing. Fixture mounts to recessed junction box (by others) using wall plate, or surface mount box with conduit entry option. See installation instructions for mounting conditions to ensure adequate support. Fixture has continuous adjustability, 20˚ up to 20˚ down with locking mechanism, as well as upward facing or downward facing.

### Finish
Fixture housing is coated using electrostatically charged polyester powder coat paint for superior protection against fade and wear. Mounting plate and all accessories to match specified color of luminaire housing. Standard colors include white, silver, black, bronze, and custom RAL color match available.

### Compliance
Components are UL recognized and luminaires are cULus listed for 40˚C ambient environments, wet location listed, and RoHS compliant. IP66 Rated.

### Environment
Suited for indoor, outdoor (wet location listed, IP66 rated). See details below. Natatorium fixtures are also suitable for applications in salt water environments.

### Natatorium
Construction consists of specialized protective coating on all metal components, stainless steel hardware, and sealed LEDs. 80% lumen maintenance at 60,000 hours. Salt Fog testing per ASTM B117-73.

### Control
Standard offering is 0-10V dimming down to 10%. A Fifthlight DALI adapter is available for DALI compatibility. An integrated sensor is available with the standard driver for standalone occupancy detection and daylight sensing.

### Life and Warranty
Standard five-year limited warranty on all parts.

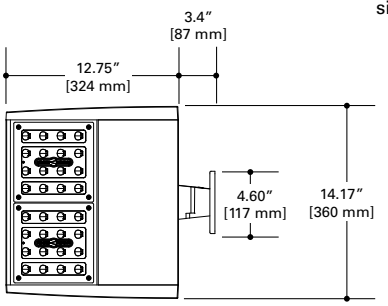


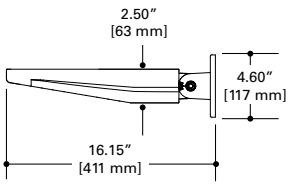

# ASYX-WM S2

**LED**

**Wall Mount**
Asymmetric Direct
Asymmetric Indirect

**CERTIFICATION DATA**
UL/cUL Wet Location Listed
LM79 / LM80 Compliant
IP66 Rated
DLC qualified product

**ENERGY DATA**
>0.9 Power Factor
<20% Total Harmonic Distortion
120V - 277V 50/60 Hz
-30˚C Min Temperature
40˚C Max Temperature

## ORDERING INFORMATION

**Sample Number: ASYX-WM-S2-ID-U-F-L35-1-UNV-W-R-STD-SVPD2-R90**

| Series | Mounting | Size | Light Level | Environment | Orientation[1] | Distribution | Color Temperature (Wattage for WM-S2 = 106.7 W) | | | | # of Circuits | Input Voltage |
|---|---|---|---|---|---|---|---|---|---|---|---|---|
| | | | | | | | L27 Delivered Lumens | L30 Delivered Lumens | L35 Delivered Lumens | L40 Delivered Lumens | | |
| **ASYX** = Asymmetric LED Luminaire | **WM** = Wall Mount | **S** = Small | **2** = 2 Light Square, (see Color Temp for CCT, lumen output, and wattage) | **ID** = Indoor<br>**OD** = Outdoor<br>**NT** = Natatorium | **U** = Uplight<br>**D** = Downlight | **F** = Forward throw | 8,539 | 8,979 | 9,420 | 10,950 | **1** | **UNV** 347 |
| | | | | | | **W** = Wide throw | 8,642 | 9,088 | 9,534 | 11,084 | | |
| | | | | | | **HSS** = Backlight Shielded | 5,721 | 6,016 | 6,311 | 7,337 | | |

| Finish | Mounting Surface | Extension Arm Length[2,4] | Driver Options | Integral Control[1][3] (Optional) | Optical Orientation (Optional) | Options[4] (Optional) | Accessories[3] (Optional) |
|---|---|---|---|---|---|---|---|
| **W** = White<br>**S** = Silver<br>**B** = Black<br>**Z** = Bronze<br>**C** = Custom color | **R** = Mounting Plate (recessed j-box)<br>**C** = Canopy Box (surface j-box) | **18** = (18″ extension arm)<br>**32** = (32″ extension arm)<br>**XX** = Custom length. (Specify length from 10″ to 36″) (XX) custom extension arm lengths require longer production lead times | **STD** = Standard 0-10V<br>**5LT-DAC** = Fifth Light DALI DAC | **SVPD2** = Standalone Occupancy/ Daylight Sensor | **R90** = Optics Rotated 90° right from standard<br>**L90** = Optics Rotated 90° left from standard<br>**180** = Optics Rotated 180° from standard | **RM** = Rigid Fixed Knuckle<br>**FM** = Flush Mount | **ISHH-01-A** = Programming Remote for field adjustment of integrated sensor<br>**ISHH-02-A** = Programming Remote for temporay control of integrated sensor |

I selected white, please advise your preferred color

recess the box into the wall we assume.

See page 3 for Tec

Powering Business Worldw

Specifications and dimensions subject to change without notice.
See additional information on the following pages.

## PHOTOMETRICS

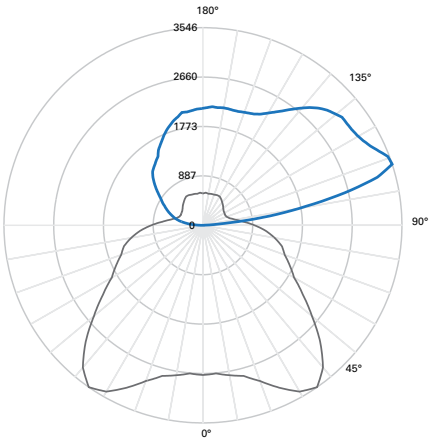


Vertical Distribution through peak candela

Horizontal Distribution through peak candela

**FILE NAME:** ASYX-X-S2-X-U-F-L40-1-UNV-X-X-X-STD
**LAMP:** 4000K LED
**OPTIC DISTRIBUTION:** Forward
**DISTRIBUTED LUMENS:** 10950.5
**INPUT WATTS:** 106.7 W
**EFFICACY:** 102.6 LPW
**TEST REPORT:** P213141

### ZONAL LUMEN SUMMARY

| Zone | Distributed Lumens | % Fixture |
|---|---|---|
| 90°-100° | 350.4 | 0.032 |
| 100°-110° | 1471.7 | 0.1344 |
| 110°-120° | 2003.9 | 0.183 |
| 120°-130° | 1966.7 | 0.1796 |
| 130°-140° | 1779.5 | 0.1625 |
| 140°-150° | 1433.4 | 0.1309 |
| 150°-160° | 1057.8 | 0.0966 |
| 160°-170° | 705.2 | 0.0644 |
| 170°-180° | 225.6 | 0.0206 |
| 0°-180° | 10950.5 | 1 |

## LUMEN MAINTENANCE

| Ambient Temperature | TM-21 Lumen Maintenance (60,000 Hours) | Theoretical L90 (Hours) |
|---|---|---|
| 25°C | > 96% | 130,000 |
| 35°C | > 93% | 91,000 |
| 40°C | > 95% | 117,000 |

## DISTRIBUTION

**F** - Forward Throw Distribution

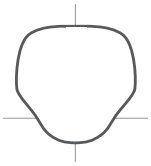

**W** - Wide Throw Distribution

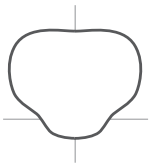

**HSS** - HSS Distribution

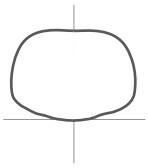

## PRODUCT LINE OVERVIEW

**ASYX 2.0 SUMMARY TABLE** (Based on 4000K, Wide Throw Distribution)

| PRODUCT NAME: | MOUNTING | SL | S1 | S2 | S3 | S4 | L3 | L4 | L5 | L6 |
|---|---|---|---|---|---|---|---|---|---|---|
| NUMBER OF LIGHT SQUARES: | | 1 | 1 | **2** | 3 | 4 | 3 | 4 | 5 | 6 |
| DISTRIBUTED LUMENS: | WM/SP | 3,355 | 5,419 | **11,084** | 16,656 | 22,323 | 17,287 | 22,512 | 28,879 | 34,072 |
| | DP | 6,710 | 10,838 | **22,168** | 33,312 | 44,646 | 34,574 | 45,024 | 57,758 | 68,144 |
| | QP | 13,420 | 21,676 | **44,336** | 66,624 | 89,292 | 69,148 | 90,048 | 115,516 | 136,288 |
| WATTAGE: | WM/SP | 28 | 55 | **107** | 158 | 214 | 160 | 215 | 268 | 319 |
| | DP | 55 | 110 | **214** | 316 | 428 | 320 | 430 | 536 | 638 |
| | QP | 111 | 220 | **428** | 632 | 856 | 640 | 860 | 1,072 | 1,276 |
| LPW: | | 121 | 99 | **104** | 105 | 104 | 108 | 105 | 108 | 107 |
| HID EQUIVALENT: | WM/SP | 39 W | 70 W | **150 W** | 250 W | 320 W | 250 W | 320 W | 400 W | 2 x 250 W |

## OPTIC ORIENTATION

**Standard**

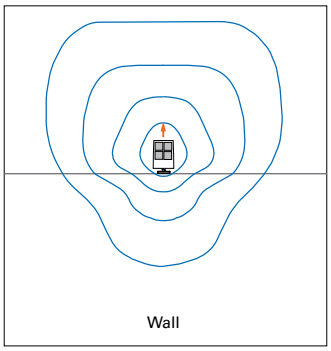


**R90**

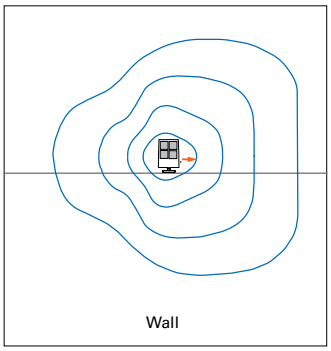


**L90**

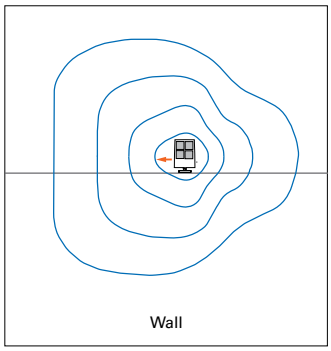


**180**

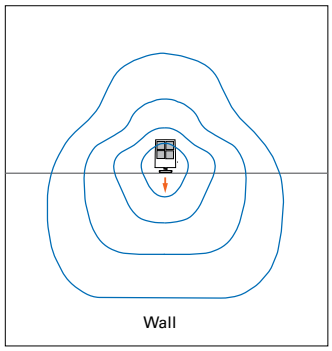

## MOUNTING AND AIMING

**R -** Recessed junction box option: 8.4" x 5"wall plate mounts to standard junction box.

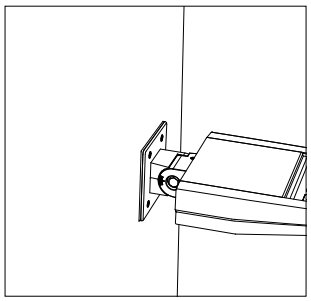

**C -** Conduit Entry option: Surface metal box fits over standard junction box with conduit entry option on all sides.

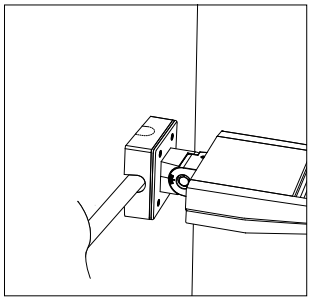

Mounting Plate

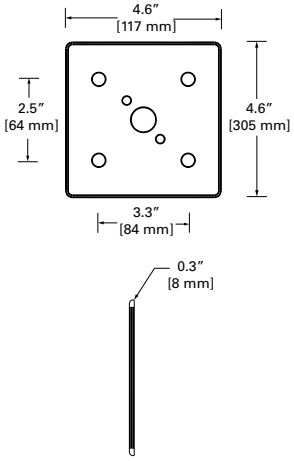


The ASYX 2.0 features +/-20˚ adjustable aiming as standard

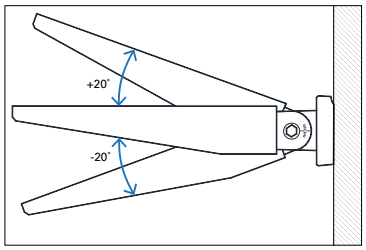


## CONTROL

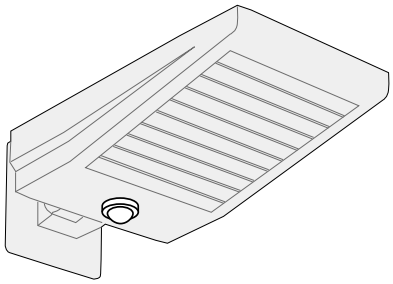

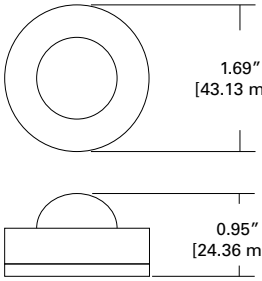


**SVPD2 -** The integral sensor option requires no additional wiring or special installation. The sensor provides standalone occupancy detection using a passive infrared sensor and provides daylight sensing using a closed-loop harvesting system. Depending on the "Environment" specified for Asyx, the following settings will be default:

- Indoor - Turns on/off with occupancy, daylight harvests down to 10% output
- Outdoor - Turns on/off with occupancy, turns off with sufficient daylight
- Natatorium - Full output with occupancy, 50% after occupancy timeout period, daylight harvests down to 10% output

**ISHH-01-A -** Programming Remote for field adjustment of Integrated Sensor
**ISHH-02-A -** Programming Remote for temporary control of Integrated Sensor

## OPTIONS

**FM** - Optional flush mount option for minimized affect. FM option is not adjustable.

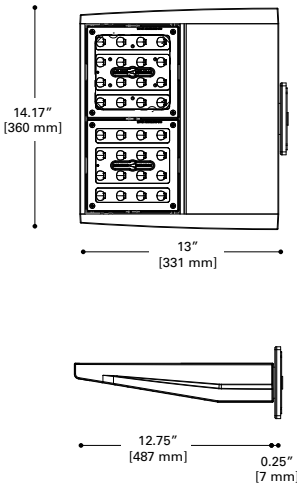


**RM** - Optional rigid knuckle mount for down ward facing, fixed applications. Available in standard optic orientation only.

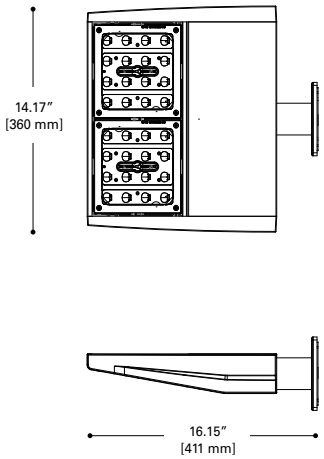


Extension Arm Length:
Specify to the inch between min and max length

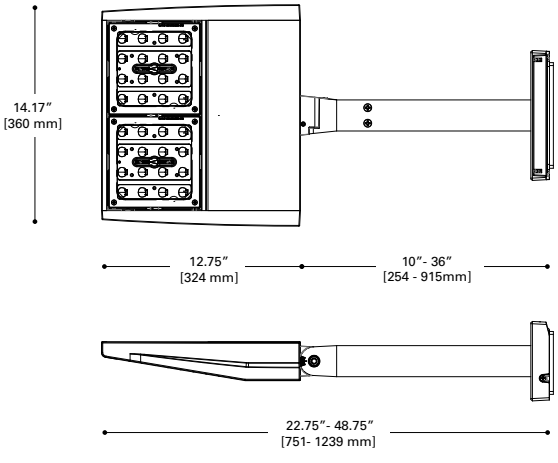


## TECHNICAL NOTES

1. Integral Sensor cannot be selected in "D", downlight orientation. Integral sensor available in single circuit option only and is not available with DALI option. Integral sensor optimum coverage height: 8ft for SL/S1/S2 and 40ft for S3/S4/L3/L4/L5/L6. Integral sensor color is white for "White" finish selection and brown for "silver, bronze, or black" finish selections.
2. Not available with "C" surface mount junction box option.
3. See "Control" section for explanation.
4. RM and FM options are not available with Extension Stem Lengths.

## Installations

**Kirkwood High School – Walker Natatorium - St Louis, MO**

ASYX-DP-L6-NT-U-F-L40-2-UNV-W-C-XX-STD-R90/ 4000K, 29,800 lumens, & 319W (per fixture head)

The Walker Natatorium, part of Kirkwood High School, is the 1st complete ASYX 2.0 natatorium installation. Featuring dual pendants with side aim/rotated optics option, the performance of the fixtures is well received. (See page 7 for spacing layout)

**Bridgeton Recreation Center - St. Louis, MO**

ASYX-SP(and DP)-L6-NT-U-F-L40-2-UNV-W-C-XX-STD-R90/ 4000K, 29,800 lumens, & 319W (per fixture head)

The Bridgeton Recreation Center uses both single pendants, and dual pendants with side aim/rotated optics. The outcome speaks for itself. (See page 7 for spacing layout)

*Photography by: Amy Hughes, Lighting Designer, McClure Engineering*



## Materials

**ASYX 2.0**
Natatorium

The natatorium, or indoor pool environment, exposes fixtures to chemicals that can affect the integrity and performance of the fixtures that live in these spaces. To protect the fixtures, the following processes are used for the ASYX 2.0 natatorium option:

a) Specialized coating process
- 4 Stage protection process for housings:w
  - Impurities are removed from metal surfaces
  - Metals are dipped twice in solvent baths
  - Special coating is applied to metals
  - Coated metals are cured in temperature regulated industrial oven

(Electrostatic powder coat paint is applied after 4 stage process)

b) Exposed fasteners
- Stainless steel is used

c) Sealed LED light engine
- Double layer sealant around frame of LEDs

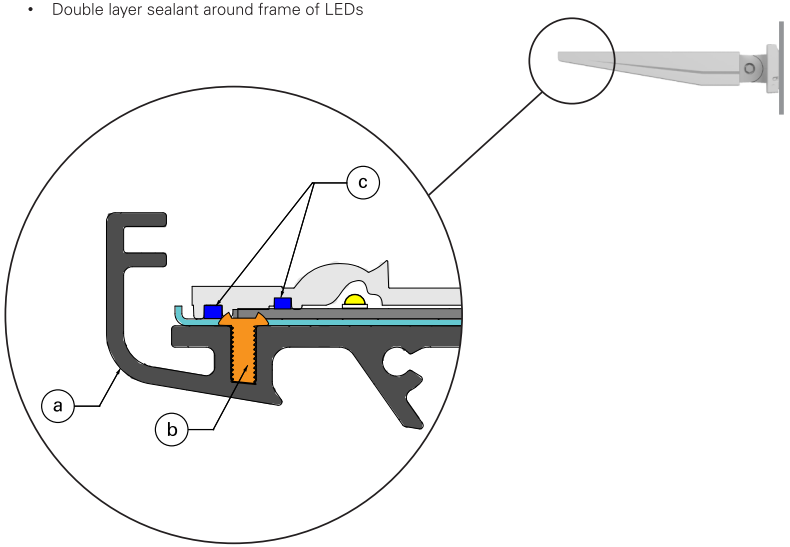


Additionally, Eaton conducted three levels of reliability testing
- Salt Fog Testing per ASTM B117-73
- Accelerated Life Testing
  - L80@60,000 hours
- In Situ Testing
  - Continuous reliability testing of installed fixtures

**ALK-004**

Revision Date:

## Design Guide

- The following diagram shows the spacial distances allowed in natatorium spaces in regards to luminaire layouts and electrical device placement and limitations per the 2014 NEC Handbook, NEC 680 code section:

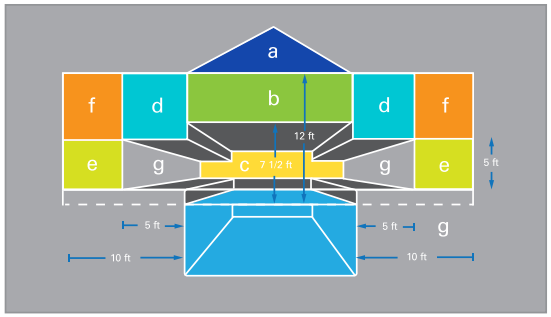


NEC 680.23(A)(2)

a. Luminaires, lighting outlets and ceiling suspended (paddle) fans permitted above 12ft.

b. Totally enclosed luminaires protected by a GFCI and ceiling suspended (paddle) fans protected by a GFCI permitted above 7 1/2 ft.

c. Luminaires, lighting outlets and ceiling suspended (paddle) fans not permitted below 5ft.

d. Existing luminaires and lighting outlets permitted in this space if rigidly attached to existing structure (GFCI required).

e. Luminaires and lighting outlets permitted if protected by GFCI.

f. Luminaires and lighting outlets permitted if rigidly attached.

g. Listed low-voltage luminaires not requiring grounding and not exceeding the low-voltage contact limit, powered by supplies in accordance with NEC 680.23(A)(2).

Ref: 2014 NEC Handbook

- The following table shows the Illuminance Criteria for Sports and Recreational spaces specific to swimming pools:

| Sports and Recreational Illuminance Recommendations | | Horizontal Illuminance (fc) Visual Ages | | | Uniformity Max: Min ratios |
|---|---|---|---|---|---|
| | | <25 | 25 - 65 | >65 | |
| Swimming and Water Sports | | | | | |
| Class I | Competition Play - Professional (5000+ spectators) | | | | |
| | @ water surface | 75 | 75 | 75 | 1.7 : 1 |
| | @ pool deck | 50 | 50 | 50 | 2.5 : 1 |
| Class II | Competition Play - Collegiate (5000 or less spectators) | | | | |
| | @ water surface | 50 | 50 | 50 | 2.5 : 1 |
| | @ pool deck | 20 | 20 | 20 | 4 : 1 |
| Class III | Competition Play for some spectator facilities | | | | |
| | @ water surface | 30 | 30 | 30 | 3 : 1 |
| | @ pool deck | 10 | 10 | 10 | 4 : 1 |
| Class IV | Competition or Recreational Play only (no spectator provision) | | | | |
| | @ water surface | 30 | 30 | 30 | 4 : 1 |
| | @ pool deck | 10 | 10 | 10 | 4 : 1 |

Ref: Illuminating Engineering Society The Lighting Handbook 10th Edition

- When designing lighting systems for swimming pools consider the following parameters to influence a better design:

| | |
|---|---|
| Veiling reflections | Are luminous reflections from specular or semi-matte surfaces that physically change the contrast of the visual task. Two factors that influence this are specularity of the material of the target and geometry between the observer and the target. |
| Daylight | Clerestories contribute to overall lighting systems direct and indirect sources. |
| Finishes | On walls and pool decks - matte finishes prevent glare and help reduce veiling reflections. Lighter colors aide in higher exitance values. |
| Ceiling Uniformity | Max to min ratios closest to 1:1 help prevent high contrasts and boost ceiling uniformity. |
| Materials | Ceiling materials, reflective surfaces, and smooth or unsmooth surfaces, directly affect illuminance on to task surfaces. The smoother and less reflective a surface or space is, the more efficient the lighting system becomes. |



## Spacing Criteria

### The Asyx 2.0

The following is a general spacing criteria guide to help evaluate various footcandle levels based on different ceiling types, heights, mounts, and distribution types. All values in the grid diagram are in footcandles and are normalized using the same light level and color temperature. For reference only.

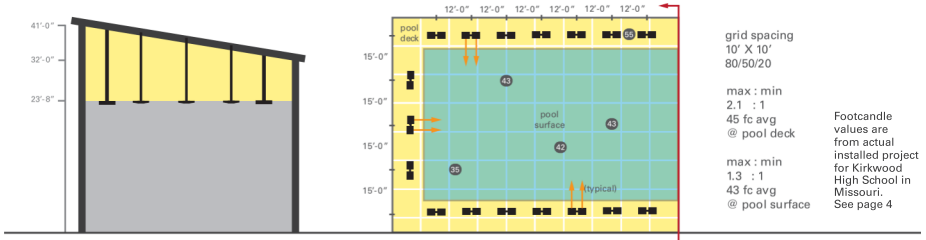


ASYX 2.0 Dual Pendant Mount — ASYX-L6-DP-Forward-4000K-R90/L90 side aim optics

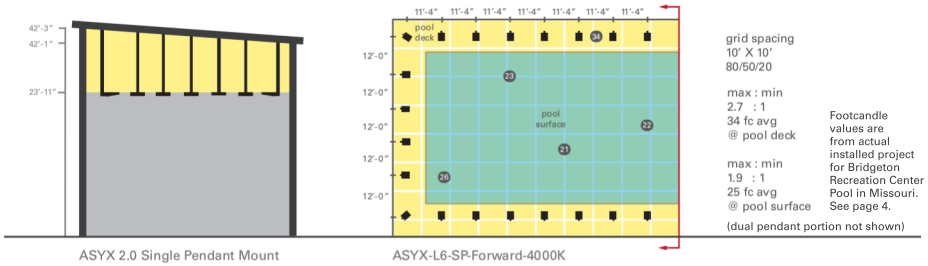


ASYX 2.0 Single Pendant Mount — ASYX-L6-SP-Forward-4000K

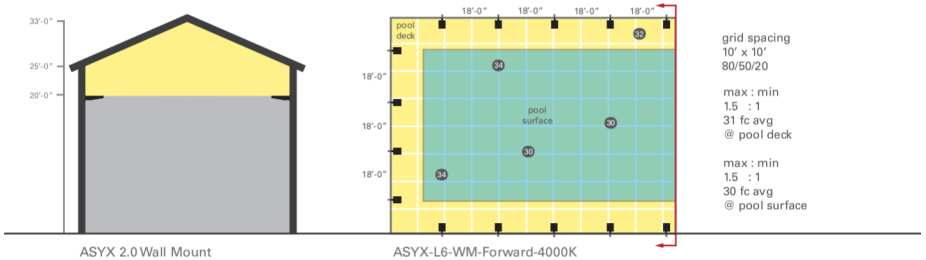


ASYX 2.0 Wall Mount — ASYX-L6-WM-Forward-4000K

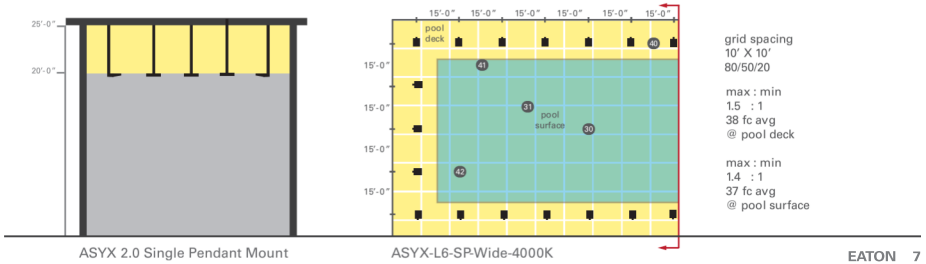


ASYX 2.0 Single Pendant Mount — ASYX-L6-SP-Wide-4000K

**ALK-004**

Revision Date:

**Eaton**
1121 Highway 74 South
Peachtree City, GA 30269
P: 770-486-4800
www.eaton.com/lighting

Canada Sales
5925 McLaughlin Road
Mississauga, Ontario L5R 1B8
P: 905-501-3000
F: 905-501-3172

Our Lighting Product Lines
Halo
Halo Commercial
Portfolio
IRiS
RSA
Metalux
Corelite
Neo-Ray
Fail-Safe
MWS
Ametrix
Shaper
io
Lumark
McGraw-Edison
Invue
Lumière
Streetworks
AtLite
Sure-Lites

Our Controls Product Lines
Greengate
iLumin
Zero 88
Fifth Light Technology
iLight (International Only)

Powering Business Worldwide

**Eaton**
18001 East Colfax Avenue
Denver, CO 80011
P: 303-393-1522
www.eaton.com/lighting

© 2016 Eaton
All Rights Reserved
Printed in USA
Publication No. BR525034EN
February 2016

Eaton is a registered trademark.

All other trademarks are property
of their respective owners.

| ALK-004 |
|---|
| Revision Date: |

| Luminaire Schedule | | | | | | | | |
|---|---|---|---|---|---|---|---|---|
| Symbol | Qty | Label | Arrangement | LLF | Description | Lum. Watts | Total Watts | Lum. Lumens |
| | 11 | S2 W | SINGLE | 0.912 | ASYX-X-S2-X-U-W-L35-1-UNV-X-X-X-STD | 106.7 | 1173.7 | 9534 |

| Calculation Summary | | | | | | | | |
|---|---|---|---|---|---|---|---|---|
| Label | CalcType | Units | Avg | Max | Min | Avg/Min | Max/Min | Grid Z |
| Indoor Pool_Floor | Illuminance | Fc | 10.21 | 13.1 | 6.1 | 1.67 | 2.15 | 0 |

| Luminaire Location Summary | | | | | | |
|---|---|---|---|---|---|---|
| LumNo | Label | X | Y | Z | Orient | Tilt |
| 1 | S2 W | 28.7 | 35.9 | 8 | 270 | 0 |
| 2 | S2 W | 37.5 | 35.9 | 8 | 270 | 0 |
| 3 | S2 W | 17.3 | 35.5 | 8 | 270 | 0 |
| 4 | S2 W | 53.9 | 35.5 | 8 | 270 | 0 |
| 5 | S2 W | 62.3 | 27 | 8 | 180 | 0 |
| 6 | S2 W | 9.8 | 22.2 | 8 | 270 | 0 |
| 7 | S2 W | 62.3 | 16.5 | 8 | 180 | 0 |
| 8 | S2 W | 12.5 | 8 | 8 | 90 | 0 |
| 9 | S2 W | 26.6 | 8 | 8 | 90 | 0 |
| 10 | S2 W | 39.4 | 8 | 8 | 90 | 0 |
| 11 | S2 W | 53.6 | 8 | 8 | 90 | 0 |

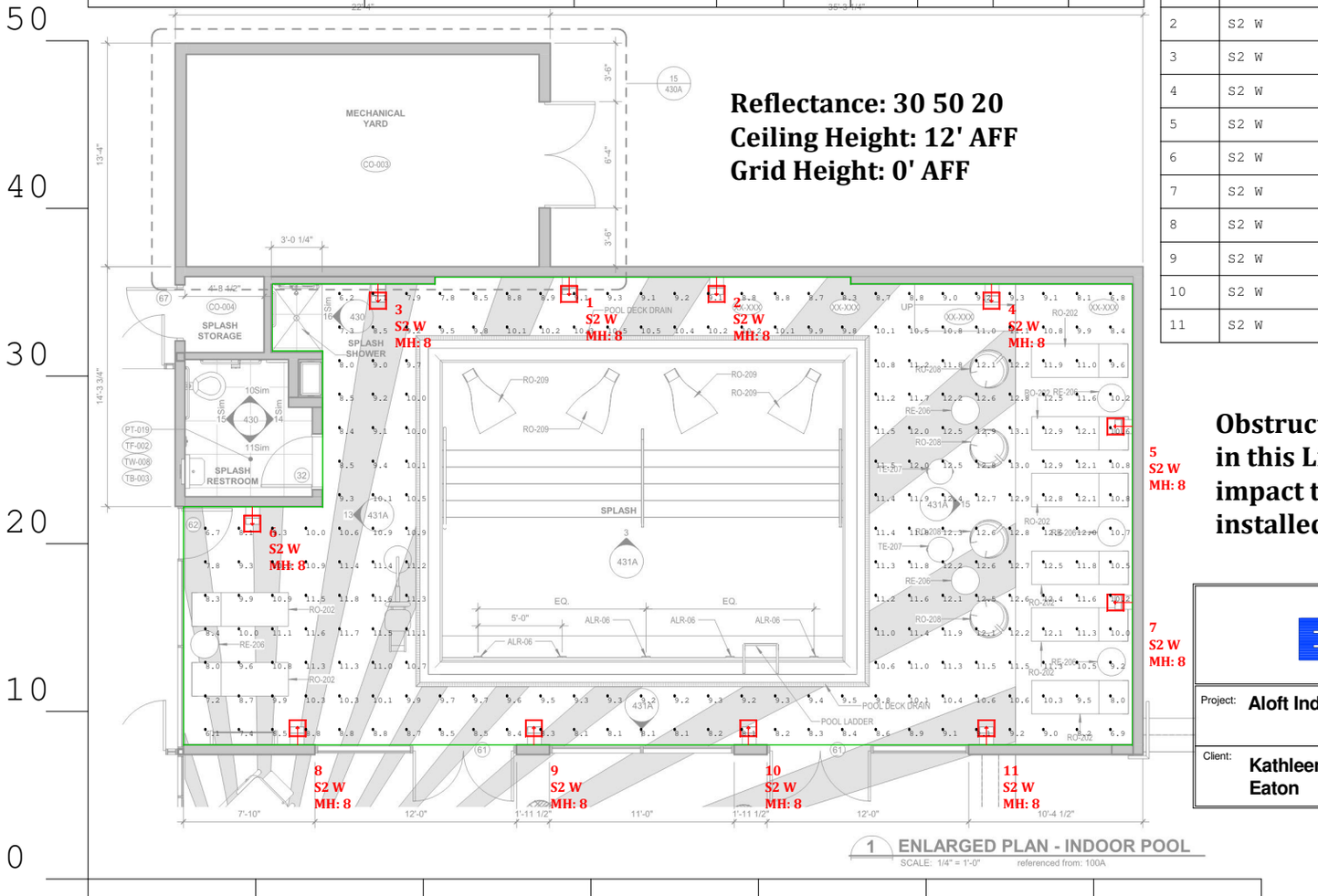


1 ENLARGED PLAN - INDOOR POOL
SCALE: 1/4" = 1'-0" referenced from: 100A

**Obstructions are NOT included in this Lighting Layout and will impact the light levels once installed**


JR
EATON
1121 HIGHWAY 74 SOUTH
PEACHTREE CITY GA 30269
Voice Number : (770) 486-4751
Fax Number : (770) 486-4599
Email Address :
mkt-lightingapplications@eaton.com


| | |
|---|---|
| Project: Aloft Indoor Pool | Scale: 1" = 10 ft. |
| | Date: 1/7/2019 |
| Client: Kathleen Kenny Eaton | Project No: 1900020.AGI |

## DESCRIPTION

Miniature size, decorator finishes, push-in connectors, economy, all combine to make single-circuit Miniature Trac perfect for residential or commercial use. Polarized connectors and end caps are molded polycarbonate. Halo Miniature Track accepts both Halo and Lazer-by-Halo lampholders.

| | | |
|---|---|---|
| Catalog # | L651MB, L652MB, L901 | Type |
| Project | Aloft | ALK-05-A,B,C |
| Comments | | Revision Date: |
| Prepared by | Kathleen Kenny | |

## SPECIFICATION FEATURES

**A. Structural**
- Extruded aluminum .060" [1.5mm] nominal wall thickness

**B. Line Conductor**
- Solid copper bus bars [cross section equivalent to #12 AWG wire].

**C. Insulating Liner**
- Extruded polyvinyl insulator.

**D. Ground Conductor**
- Exclusive independent grounding bus conductor. Maintains an independent positive ground #12 AWG path between lampholder, Trac channel and building's ground system.

**E. Neutral Conductor**
- Cross section equivalent of #12 AWG wire.

**F. Polarity Indicator (Neutral)**
- Visual polarity groove indicates proper electrical installation of lampholder adapter.

**Listings**
- cULus listed for use with Halo and Lazer-by-Halo lampholders.

**Mounting**
- Track system is recommended for ceiling mount only. For alternate mounting methods consult factory.

**L650, L651**
**L652, L653**

**MINIATURE SINGLE CIRCUIT TRAC SYSTEM**

**Power -Trac**

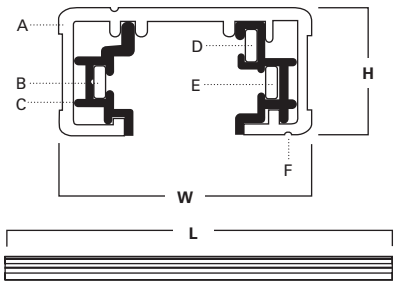


| | L | W | H |
|---|---|---|---|
| **L650** 2' Nominal | 20-1/8" [511mm] | 1-3/8" [35mm] | 11/16" [18mm] |
| **L651** 4' Nominal | 44-1/8" [1121mm] | 1-3/8" [35mm] | 11/16" [18mm] |
| **L652** 8' Nominal | 92-1/8" [2340mm] | 1-3/8" [35mm] | 11/16" [18mm] |
| **L653** 12' Nominal | 140-1/8" [3559mm] | 1-3/8" [35mm] | 11/16" [18mm] |

## ORDERING INFORMATION

**SAMPLE NUMBER:** L651MB

| Track | Finishes | Connectors (Order Separately) | Accessories (Order Separately) | Current Limiters (Order Separately) |
|---|---|---|---|---|
| **L650**= 2'<br>**L651**= 4'<br>**L652**= 8'<br>**L653**= 12' | **P**=White<br>**MB**=Black | **L900**=Outlet Box Cover<br>**L901**=Live End Connector<br>**L902**=Flexible Connector<br>**L903**=Straight Connector<br>**L904**=L Connector<br>**L905**=T Connector<br>**L906**=X Connector<br>**L907**=Outlet Box for use with T-Bar ceiling<br>**L908**=Mini Joiner<br>**L909**=Floating Canopy and Connector<br>**L950**=Cord and Plug Connector<br>**L979**=Conduit Continuation Kit<br>**L980**=Live End Conduit Adapter<br>**DE600**=Dead End<br><br>Finishes<br>**P**=White<br>**MB**=Black | **L951**=Wire Way Cover for Pendant Assembly Kit<br>**L983**=T-Bar Attachment Clip<br>**L992**=Pendant Kit Assembly<br>**L48**=48" Steel Stem<br>**L994**=Pendant Adapter<br><br>Finishes<br>**P**=White<br>**MB**=Black | Current Limiter - End Feed<br>**LC901CB120**=120W (1A @ 120V)<br>**LC901CB300**=300W (2.5A @ 120V)<br>**LC901CB600**=600W (5A @ 120V)<br>**LC901CB960**=960W (8A @ 120V)<br>**LC901CB1200**=1200W (10A @ 120V)<br><br>Current Limiter - Center Feed<br>**LC903CB120**=120W (1A @ 120V)<br>**LC903CB300**=300W (2.5A @ 120V)<br>**LC903CB600**=600W (5A @ 120V)<br>**LC903CB960**=960W (8A @ 120V)<br>**LC903CB1200**=1200W (10A @ 120V)<br><br>Finishes<br>**P**=White<br>**MB**=Black |

**ALK-05-A,B,C**

Revision Date:

### LC901, LC903 Current Limiter - End and Center Feeds

End-feed and Center-feed capable:
Five breaker sizes are available. Consult factory if other sizes are required. Can be utilized on hard or grid ceilings. Can be used with pendant suspended track. Breaker can be used as an on-off switch. Breaker features a "tripped" condition indicator. cULus Listed.

## ORDERING INFORMATION

**SAMPLE NUMBER:** LC901CB120P

| Feed Type | Circuit 1 Breaker | Finish |
|---|---|---|
| **LC901**= Halo Power-Trac 1-Circuit End Feed<br>**LC903**= Halo Power-Trac 1-Circuit Center Feed | **CB120**=120W (1A @120V)<br>**CB300**=300W (2.5A @120V)<br>**CB600**=600W (5A @120V)<br>**CB960**=960W (8A @120V)<br>**CB1200**=1200W (10A @120V) | **P**=White<br>**MB**=Black |

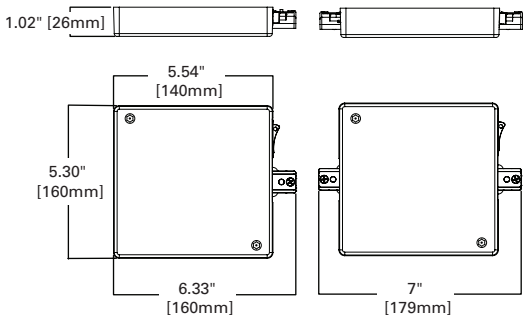


Sample catalog number: LC901CB120P

Consult factory for Single Circuit Center-feed requiring two circuit breakers.

**LC901**
**LC903**

T24 Can be used to comply with California Title 24 High Efficacy requirements
T20 Certified to California Title 20 Appliance Database

### L900 - Outlet Box Cover

Can be used at any electrical feed connection point (Live, Straight, L, T or X). Drill guides on back for virtually all standard outlet boxes. Size: 5" sq. Screws included.
**Color codes:** P (White), MB (Black)

## ORDERING INFORMATION

**SAMPLE NUMBER:** L900P

| Connector | Finish |
|---|---|
| **L900**= Outlet Box Cover | **P**=White<br>**MB**=Black |

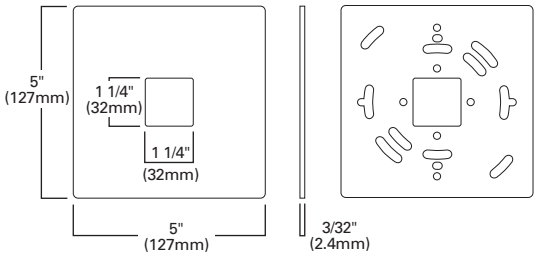


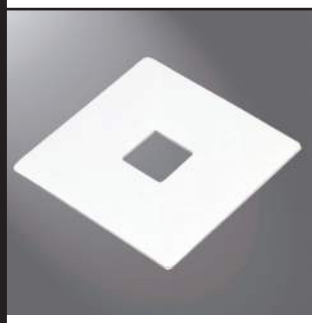

**L900**

### L901 - Live End Connector

To start a run.
**Color codes:** P (White), MB (Black)

## ORDERING INFORMATION

**SAMPLE NUMBER:** L901P

| Connector | Finish |
|---|---|
| **L901**= Live End Connector | **P**=White<br>**MB**=Black |

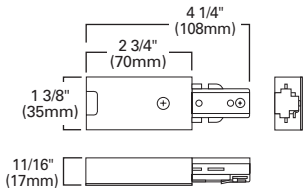

**L901**

### L902 - Flexible Connector

To connect two track sections at any angle up to 90° in either plane or wall to ceiling or pitched ceiling applications.
**Color codes:** P (White), MB (Black)

## ORDERING INFORMATION

**SAMPLE NUMBER:** L902P

| Connector | Finish |
|---|---|
| **L902**= Flexible Connector | **P**=White<br>**MB**=Black |

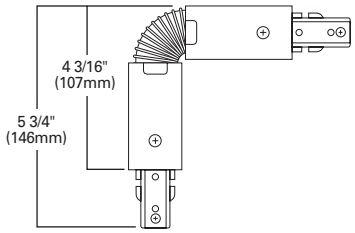

**L902**



Powering Business Worldwide

### L903 - Straight Connector

To connect two track sections end-to-end. L903 differs from mini connector L908 in that it provides a center feed option and is longer.May be used as feed point.

**Color codes:** P (White), MB (Black)

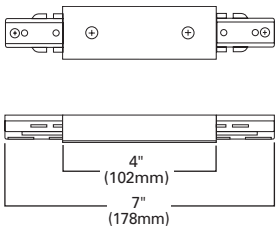


#### ORDERING INFORMATION

**SAMPLE NUMBER:** L903P

| Connector | Finish |
|---|---|
| **L903**= Straight Connector | **P**=White<br>**MB**=Black |

**L903**

### L904 - L Connector

To connect two track sections at a right angle. Field adjustable for either right hand or left hand application. May be used as feed point.

**Color codes:** P (White), MB (Black)

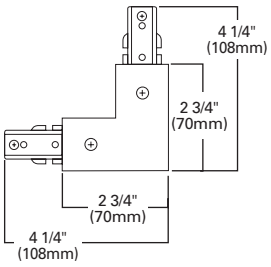


#### ORDERING INFORMATION

**SAMPLE NUMBER:** L904P

| Connector | Finish |
|---|---|
| **L904**= L Connector | **P**=White<br>**MB**=Black |

**L904**

### L905 - T Connector

To connect three track sections into a T configuration. Field adjustable for either right hand or left hand application. May be used as feed point.

**Color codes:** P (White), MB (Black)

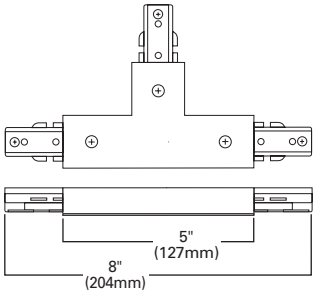


#### ORDERING INFORMATION

**SAMPLE NUMBER:** L905P

| Connector | Finish |
|---|---|
| **L905**= T Connector | **P**=White<br>**MB**=Black |

**L905**

### L906 - X Connector

To connect four track sections into a cross configuration. May be used as feed point.

**Color codes:** P (White), MB (Black)

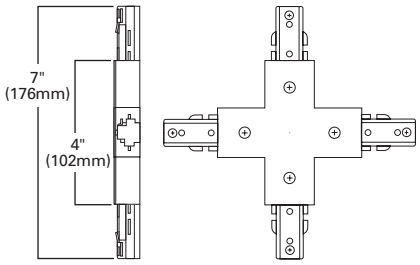


#### ORDERING INFORMATION

**SAMPLE NUMBER:** L906P

| Connector | Finish |
|---|---|
| **L906**= X Connector | **P**=White<br>**MB**=Black |

**L906**

### L907 - Outlet Box for use with T-Bar Ceiling

L901, L903, L904, L905 or L906 connector also required. 4″x 4″ x 1 1/8″.

**Color codes:** P (White), MB (Black)

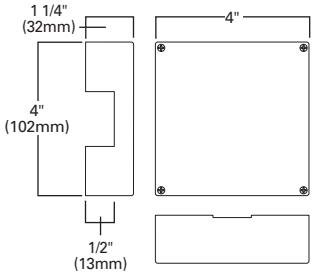


#### ORDERING INFORMATION

**SAMPLE NUMBER:** L907P

| Connector | Finish |
|---|---|
| **L907**= Outlet Box for use with T-Bar Ceiling | **P**=White<br>**MB**=Black |

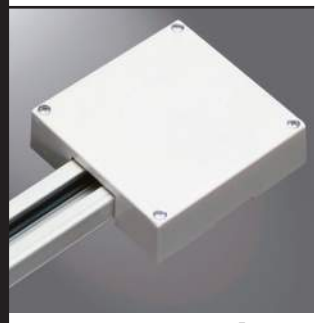

**L907**

**ALK-05-A,B,C**

Revision Date:

### L908 - Mini Joiner

A low profile connector to cleanly and crisply join two straight track sections end-to-end. (Note: The L908 is not a feed point).

**Color codes:** P (White), MB (Black)

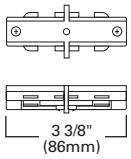

**L908**

#### ORDERING INFORMATION

**SAMPLE NUMBER:** L908P

| Connector | Finish |
|---|---|
| **L908**= Mini Joiner | **P**=White<br>**MB**=Black |

### L909 - Floating Canopy and Connector

Track can be connected to existing outlet box located anywhere along the track. Comes with canopy cover, connector, dead-end and mounting hardware.
4 1/8" x 4 1/4" x 1 3/8".

**Color codes:** P (White), MB (Black)

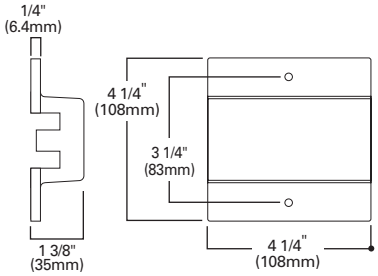


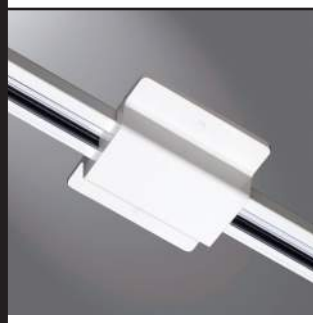

**L909**

#### ORDERING INFORMATION

**SAMPLE NUMBER:** L909P

| Connector | Finish |
|---|---|
| **L909**= Floating Canopy and Connector | **P**=White<br>**MB**=Black |

### L950 - Cord and Plug Connector

12' three-wire cord with grounded plug. Maximum capacity 10 AMP.

**Color codes:** P (White), MB (Black)

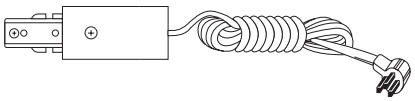

**L950**

#### ORDERING INFORMATION

**SAMPLE NUMBER:** L950P

| Connector | Finish |
|---|---|
| **L950**= Cord and Plub Connector | **P**=White<br>**MB**=Black |

### L951 - Wire Way Cover for Pendant Assembly Kit

For track to be wired through stem(order one for each feed point used). For use with line connectors (L901, L902, L903, L904, L905 or L906) and pendant stem kit (L992)–order separately.

**Color codes:** P (White), MB (Black)

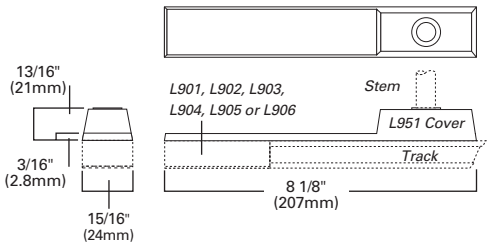

**L951**

#### ORDERING INFORMATION

**SAMPLE NUMBER:** L951P

| Connector | Finish |
|---|---|
| **L951**= Wire Way Cover for Pendant Assembly Kit | **P**=White<br>**MB**=Black |

### L979 - Conduit Continuation Kit

Consisting of one left feed and one right feed. To continue a run around obstructions. Designed to accept 1/2" trade size conduit fitting (not included).

**Color codes:** P (White), MB (Black)

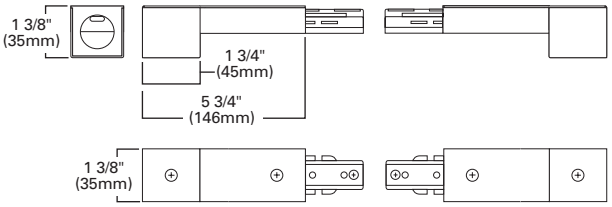

**L979**

#### ORDERING INFORMATION

**SAMPLE NUMBER:** L979P

| Connector | Finish |
|---|---|
| **L979**= Conduit Continuation Kit | **P**=White<br>**MB**=Black |



Powering Business Worldwide

### L980 - Live End Conduit Adapter

Designed to accept standard 1/2" trade size conduit fitting (not supplied). Use when feeding to track through surface conduit system.

**Color codes:** P (White), MB (Black)

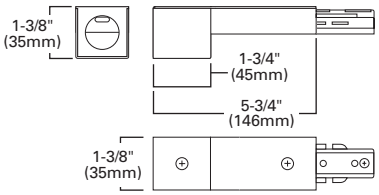

**L980**

#### ORDERING INFORMATION

**SAMPLE NUMBER:** L980P

| Connector | Finish |
|---|---|
| **L980**= Live End Conduit Adapter | **P**=White<br>**MB**=Black |

### L983 - T-Bar Attachment Clip

Allows track to be attached to inverted tee ceiling. Order as follows: 2 kits for 2' Trac; 2 kits for 4' Trac; 3 kits for 8' Trac and 4 kits for 12' Trac.

### L986 Mini-T Bar Clip

For mounting Trac on suspended ceilings with mini-grid (9/16" wide) system.

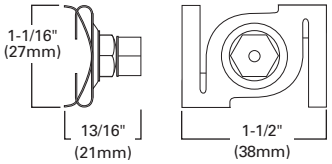

**L983**

#### ORDERING INFORMATION

**SAMPLE NUMBER:** L983P

| Connector | Finish |
|---|---|
| **L983**= T-Bar Attachment Clip<br>**L986**= Mini T-Bar Clip | **P**=White<br>**MB**=Black |

### L992 - Pendant Kit Assembly

Order 2 kits for 2' Trac; 2 kits for 4' Trac; 3 kits for 8' Trac; and 4 kits for 12' Trac. Includes one 18" threaded steel stem, canopy andmounting hardware.

### L48 48" Steel Stem

For additional length with L992. Can be field cut.

**Color codes:** P (White), MB (Black)

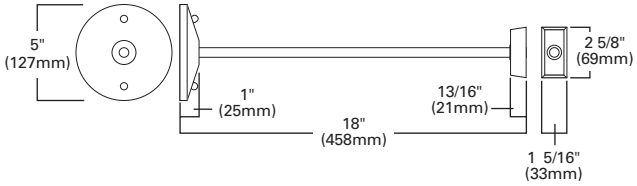

**L992**

#### ORDERING INFORMATION

**SAMPLE NUMBER:** L992P

| Connector | Finish |
|---|---|
| **L992**= Pendant Kit Assembly | **P**=White<br>**MB**=Black |

### L994 - Pendant Adapter

For installing pendant mounted Power-Trac on sloped ceiling. For use with L992.

**Color codes:** P (White), MB (Black)

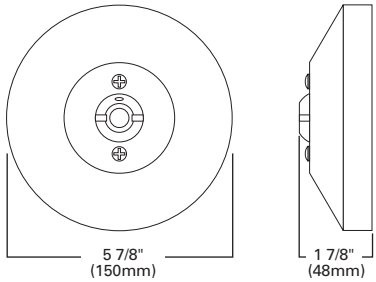

**L994**

#### ORDERING INFORMATION

**SAMPLE NUMBER:** L994P

| Connector | Finish |
|---|---|
| **L994**= Pendant Adapter | **P**=White<br>**MB**=Black |

### DE600 - Dead End

**Color codes:** P (White), MB (Black)

**DE600**

#### ORDERING INFORMATION

**SAMPLE NUMBER:** DE600P

| Connector | Finish |
|---|---|
| **DE600**= Dead End | **P**=White<br>**MB**=Black |



**Eaton**
1121 Highway 74 South
Peachtree City, GA 30269
P: 770-486-4800
www.eaton.com/lighting

Specifications and dimensions subject to change without notice.

# HALO

## DESCRIPTION

High efficacy low profile track fixture ideal for accent and display lighting applications. Featuring die cast construction with a simple low profile design. These lampholders are perfect for those applications where performance is required from a discreet source.

| | | |
|---|---|---|
| Catalog # | L80808NF9030MB, LZR2 | Type: ALK-06 |
| Project | Aloft | Revision Date: |
| Comments | | Date |
| Prepared by | Kathleen Kenny | |

## SPECIFICATION FEATURES

**Quick Lock Adapter***
Attaches electrically and mechanically anywhere along the track. Includes discrete locking tab that locks the luminaire on the track and allows for easy removal and repositioning.

**Heat Sink**
Aluminum die-cast heat sink provides exceptional thermal management to yield 70% lumen maintenance after 50,000 hours of operation.

**LED Light Engine**
Chip on board LED provides a uniform source with high efficiency and no pixilation. Available in 90 CRI minimum, R9 greater than 50 and color accuracy within 3 SDCM provide color accuracy and uniformity.

**Optics**
Configurable optics allow for the reflectors to be changed in the field to adjust to the current lighting need. Available in spot, flood and narrow flood distributions.

**Media**
Precision designed trim ring contains unique teeth locking mechanism, and can accept up to 2 pieces of standard media. The 3″ diameter fixture accepts PAR 20 standard media. The 4″ diameter fixture accepts PAR 30 standard media.

**Luminaire Arm**
Arm allows the lamp housing tilt to adjust ±180° vertically and ±350° horizontally. This enables a clean look while providing full aiming capabilities.

**Dimming**
TRIAC, ELV or Phasecut

- Designed for continuous dimming capability to nominally 5% with many 120V Leading Edge (LE) and Trailing Edge (TE) Phase Control Dimmers. (Dimmers with low end trim adjustment offer greater assurance of achieving 5% level.)
- Consult dimmer manufacturer for compatibility and conditions od use.

**Warranty**
Five year limited warranty, consult website for details. www.eaton.com/lighting/legal.

**Drivers**
3″ fixtures (12W and 21W) contain integral 120V, 50/60 Hz constant current driver that provides noise free operation. 4″ fixtures (35W) contain 120V 50/60Hz constant current driver that provides noise free operation.

**Compliance**
cULus listed / certified for use with Halo Single Circuit Power-Trac, Lazer Track, and Global [See Footnote #1 below Ordering Information.] TEK/HTEK track. NSF non-food zone compliant. EMI/RFI emissions per FCC 47CFR Part 15 Class B consumer limits. Contains no mercury or lead and RoHS compliant. Photometric testing in accordance with IES LM-79-08. Lumen maintenance projections in accordance with IES LM-80-08 and TM-21-11.

NSF/ANSI 2

## L808

**LED Track Head**
**3-Inch and 4-Inch**
**Flat Back Cylinder**

**90 CRI**

| 850lm package - 12W | CBCP |
|---|---|
| Spot 14˚ | 8,544 |
| Narrow Flood 21˚ | 5,207 |
| Flood 41˚ | 1,610 |
| **Lighting Data - 3000K Spot** | |
| Lumens | 1007 |
| Lumens per watt: | 84.6 |
| **Energy Data** | |
| Input Power: | 11.89W |
| Power Factor: | ≥.99 |
| Input Current: | .113A |

| 1500lm package - 21W | CBCP |
|---|---|
| Spot 14˚ | 11,474 |
| Narrow Flood 21˚ | 7,778 |
| Flood 41˚ | 2,864 |
| **Lighting Data - 3000K Spot** | |
| Lumens | 1506 |
| Lumens per watt: | 72.7 |
| **Energy Data** | |
| Input Power: | 20.66W |
| Power Factor: | ≥.99 |
| Input Current: | .174A |

| 2500lm package - 35W | CBCP |
|---|---|
| Spot 12˚ | 29,149 |
| Narrow Flood 24˚ | 9,865 |
| Flood 33˚ | 6,485 |
| **Lighting Data - 3000K Spot** | |
| Lumens | 2404 |
| Lumens per watt: | 68.9 |
| **Energy Data** | |
| Input Power: | 34.86W |
| Power Factor: | ≥.99 |
| Input Current: | .29A |

### 3-Inch Fixture

**850 Lumen - 12W**
**1500 Lumen - 21W**

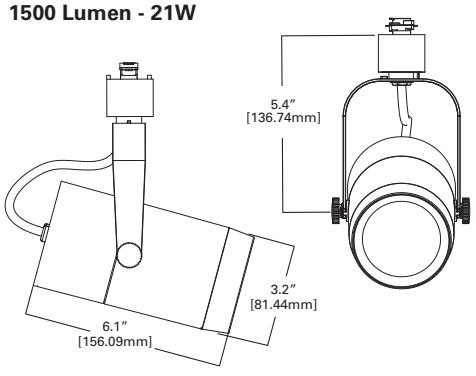


### 4-Inch Fixture

**2500 Lumen - 35W**

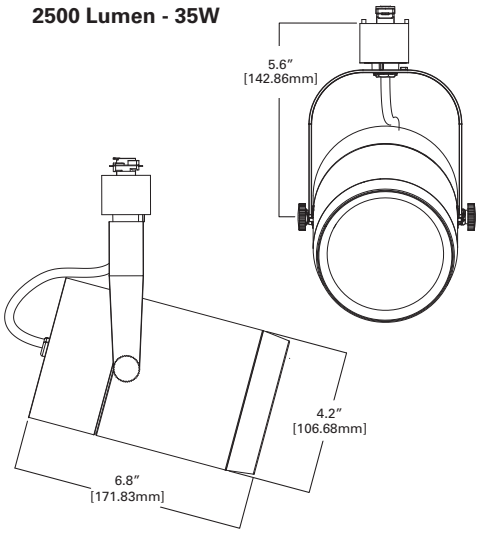


*Note: Fixture to only be attached to horizontally installed track systems.


Eaton
1121 Highway 74 South
Peachtree City, GA 30269
P: 770-486-4800
www.eaton.com/lighting


Specifications and dimensions subject to change without notice.

**ALK-06**
Revision Date:

## ORDERING INFORMATION

**SAMPLE NUMBER:** L80815SP9030AH (Halo or Lazer Track connector, 1500 lumen, Spot Distribution, 90 CRI, 3000K, with Aluminum Haze Finish)

| Track | LED | Series | Lumen Package | Distribution | CRI | CCT | Finish |
|---|---|---|---|---|---|---|---|
| **L**=Halo and Lazer Power-Trac (Single Circuit)<br>**LJ**=Juno® Track[1]<br>**LL**=Lightolier® Track[2]<br>**L2G**=Global® TEK or HTEK[3] | **8**=LED | **08**=Cylinder | **08**=850 lm<br>**15**=1500 lm<br>**25**=2500 lm | **SP**=Spot<br>**NF**=Narrow Flood<br>**FL**=Flood | **90**=90 | **27**=2700K<br>**30**=3000K<br>**35**=3500K<br>**40**=4000K | **AH**=Aluminum Haze<br>**MB**=Black<br>**P**=White |

### Accessories (order separately)

**Reflectors**

**SREF-808302-PK**= Spot Reflector 3”
**FREF-808302-PK**=Flood Reflector 3”
**NFREF-808302-PK**=Narrow Flood Reflector 3”
**SREF-808402-PK**= Spot Reflector 4”
**FREF-808402-PK**=Flood Reflector 4”
**NFREF-808402-PK**=Narrow Flood Reflector 4”

**Media - 3”**

**Color Filters**

**F22-20**=Red
**F33-20**=Blue
**F44-20**=Green
**F55-20**=Yellow
**F66-20**=Mercury

**Dichronic Filters**

**F71-20**=Peach
**F72-20**=Amber
**F73-20**=Green
**F74-20**=Medium Blue
**F75-20**=Yellow
**F76-20**=Red
**F77-20**=Dark Blue
**F78-20**=Light Blue
**F79-20**=Neutral Density
**F80-20**=Magenta

**Beam-Modifying Lenses**

**DIF-20**=Diffused Lens
**OSL-20**=Overall Spread Lens
**LSL-20**=Linear Spread Lens

**Louvers**

**LVR-20**=Hex Cell Louver

**Media - 4”**

**Color Filters**

**LND-RED**=Red Color Filter
**LND-BLU**=Blue Color Filter

**Dichronic Filters**

**LND-CLR**=Clear Protective Glass Lens
**LND-AMB**=Amber Color Filter
**LND-PCH**=Cosmetic Peach Filter
**LND-MWL**=Milk White Lens

**Beam-Modifying Lenses**

**LND-UVF**=Optivex™ UN Filter
**LND-DSL**=Diffusion Spread Lens
**LND-LSL**=Linear Spread Lens
**LND-PSL**=Prismatic Spread Lens

**Louvers**

**LND-LVR**=Hex Cell Louver

**NOTES: 1.** Juno® T single circuit and 2-circuit track contact. Juno® is a registered trademark of Juno® Lighting. **2.** Lightolier® Lyfespan 6000 single circuit and 2 circuit track contact. Lightolier® is a registered trademark of Philips Lighting. **3.** Global® is a registered trademark of Nordic Aluminum.

Select models are DesignLights™ Consortium Qualified. Refer to www.designlights.org Qualified Products List under Family Models for details.

Summary based 90 CRI 3000K White finish. Full data available in IES files online.

## PHOTOMETRICS

**12W**

**Color Temp =** 3000K
**4000K Multiplier =** 1.25

**0 deg Aiming Angle Horizontal Footcandles**

Spot: 14°
CBCP: 8544
Lumens: 1007
LpW: 84.6

| MH | FC | L | W |
|---|---|---|---|
| 5' | 341.9 | 1.2 | 1.2 |
| 7.5' | 152 | 1.8 | 1.8 |
| 10' | 85.5 | 2.4 | 2.4 |
| 12.5' | 54.7 | 3 | 3 |
| 15' | 38 | 3.6 | 3.6 |

**30 deg Aiming Angle Horizontal Footcandles**

| MH | FC | L | W | CB |
|---|---|---|---|---|
| 5' | 225.5 | 1.5 | 1.2 | 2.9 |
| 7.5' | 100.2 | 2.3 | 2 | 4.3 |
| 10' | 56.4 | 3.1 | 2.6 | 5.8 |
| 12.5' | 36.1 | 3.9 | 3.4 | 7.2 |
| 15' | 25.1 | 4.7 | 4 | 8.7 |

**30 deg Aiming Angle Vertical Footcandles on Wall**

| D | FC | L | W | CB |
|---|---|---|---|---|
| 3' | 136 | 2.5 | 1.2 | 5.2 |
| 4' | 76.5 | 3.5 | 1.8 | 6.9 |
| 5' | 49 | 4.3 | 2.2 | 8.7 |
| 6' | 34 | 5.2 | 2.6 | 10.4 |

**60 deg Aiming Angle Vertical Footcandles on Wall**

| D | FC | L | W | CB |
|---|---|---|---|---|
| 3' | 626.3 | 0.8 | 0.8 | 1.7 |
| 4' | 352.3 | 1.1 | 1 | 2.3 |
| 5' | 225.5 | 1.5 | 1.2 | 2.9 |
| 6' | 156.6 | 1.8 | 1.6 | 3.5 |

Narrow Flood: 21°
CBCP: 5207
Lumens: 994
LpW: 83.5

| MH | FC | L | W |
|---|---|---|---|
| 5' | 208.3 | 1.8 | 1.8 |
| 7.5' | 92.6 | 2.6 | 2.6 |
| 10' | 52.1 | 3.6 | 3.6 |
| 12.5' | 33.3 | 4.4 | 4.4 |
| 15' | 23.1 | 5.4 | 5.4 |

| MH | FC | L | W | CB |
|---|---|---|---|---|
| 5' | 140.5 | 2.3 | 2 | 2.9 |
| 7.5' | 62.5 | 3.4 | 3 | 4.3 |
| 10' | 35.1 | 4.6 | 4 | 5.8 |
| 12.5' | 22.5 | 5.7 | 5 | 7.2 |
| 15' | 15.6 | 6.9 | 6 | 8.7 |

| D | FC | L | W | CB |
|---|---|---|---|---|
| 3' | 97.2 | 3.2 | 1.8 | 5.2 |
| 4' | 54.7 | 4.3 | 2.4 | 6.9 |
| 5' | 35 | 5.4 | 3 | 8.7 |
| 6' | 24.3 | 6.5 | 3.6 | 10.4 |

| D | FC | L | W | CB |
|---|---|---|---|---|
| 3' | 390.4 | 1.3 | 1.2 | 1.7 |
| 4' | 219.6 | 1.8 | 1.6 | 2.3 |
| 5' | 140.5 | 2.3 | 2 | 2.9 |
| 6' | 97.6 | 2.6 | 2.4 | 3.5 |

Flood: 41°
CBCP: 1610
Lumens: 945
LpW: 79.4

| MH | FC | L | W |
|---|---|---|---|
| 5' | 77.4 | 3.4 | 3.4 |
| 7.5' | 34.4 | 5.2 | 5.2 |
| 10' | 19.4 | 7 | 7 |
| 12.5' | 12.4 | 8.6 | 8.6 |
| 15' | 8.6 | 10.4 | 10.4 |

| MH | FC | L | W | CB |
|---|---|---|---|---|
| 5' | 58.8 | 3.6 | 3.6 | 2.9 |
| 7.5' | 26.1 | 5.4 | 5.6 | 4.3 |
| 10' | 14.7 | 7.3 | 7.4 | 5.8 |
| 12.5' | 9.4 | 9.1 | 9.2 | 7.2 |
| 15' | 6.5 | 10.9 | 11.2 | 8.7 |

| D | FC | L | W | CB |
|---|---|---|---|---|
| 3' | 58.6 | 2.8 | 2.8 | 5.2 |
| 4' | 32.9 | 3.8 | 3.8 | 6.9 |
| 5' | 21.1 | 4.8 | 4.6 | 8.7 |
| 6' | 14.6 | 5.7 | 5.6 | 10.4 |

| D | FC | L | W | CB |
|---|---|---|---|---|
| 3' | 163.3 | 2.1 | 2.2 | 1.7 |
| 4' | 91.9 | 2.8 | 2.8 | 2.3 |
| 5' | 58.8 | 3.6 | 3.6 | 2.9 |
| 6' | 40.8 | 4.3 | 4.4 | 3.5 |



Powering Business Worldwide

**ALK-06**

Revision Date:

## PHOTOMETRICS

### 21W

**Color Temp =** 3000K
**4000K Multiplier =** 1.25

**0 deg Aiming Angle Horizontal Footcandles**

| | MH | FC | L | W |
|---|---|---|---|---|
| Spot: 14° | 5' | 511.3 | 1.2 | 1.2 |
| CBCP: 11474 | 7.5' | 227.3 | 1.8 | 1.8 |
| Lumens: 1506 | 10' | 127.8 | 2.4 | 2.4 |
| LpW: 72.7 | 12.5' | 81.8 | 3 | 3 |
| | 15' | 56.8 | 3.6 | 3.6 |
| Narrow Flood: 21° | 5' | 317 | 1.8 | 1.8 |
| CBCP: 7778 | 7.5' | 140.9 | 2.6 | 2.6 |
| Lumens: 1512 | 10' | 79.2 | 3.6 | 3.6 |
| LpW: 73 | 12.5' | 50.7 | 4.4 | 4.4 |
| | 15' | 35.2 | 5.4 | 5.4 |
| Flood: 41° | 5' | 117.8 | 3.4 | 3.4 |
| CBCP: 2864 | 7.5' | 52.4 | 5.2 | 5.2 |
| Lumens: 1439 | 10' | 29.5 | 7 | 7 |
| LpW: 6935 | 12.5' | 18.8 | 8.6 | 8.6 |
| | 15' | 13.1 | 10.4 | 10.4 |

**30 deg Aiming Angle Horizontal Footcandles**

| MH | FC | L | W | CB |
|---|---|---|---|---|
| 5' | 337.2 | 1.5 | 1.2 | 2.9 |
| 7.5' | 149.9 | 2.3 | 2 | 4.3 |
| 10' | 84.3 | 3.1 | 2.6 | 5.8 |
| 12.5' | 54 | 3.9 | 3.4 | 7.2 |
| 15' | 37.5 | 4.7 | 4 | 8.7 |
| 5' | 213.9 | 2.3 | 2 | 2.9 |
| 7.5' | 95.1 | 3.4 | 3 | 4.3 |
| 10' | 53.5 | 4.6 | 4 | 5.8 |
| 12.5' | 34.2 | 5.7 | 5 | 7.2 |
| 15' | 23.8 | 6.9 | 6 | 8.7 |
| 5' | 89.5 | 3.6 | 3.6 | 2.9 |
| 7.5' | 39.8 | 5.4 | 5.6 | 4.3 |
| 10' | 22.4 | 7.3 | 7.4 | 5.8 |
| 12.5' | 14.3 | 9.1 | 9.2 | 7.2 |
| 15' | 9.9 | 10.9 | 11.2 | 8.7 |

**30 deg Aiming Angle Vertical Footcandles on Wall**

| D | FC | L | W | CB |
|---|---|---|---|---|
| 3' | 203.5 | 2.5 | 1.2 | 5.2 |
| 4' | 114.5 | 3.5 | 1.8 | 6.9 |
| 5' | 73.2 | 4.3 | 2.2 | 8.7 |
| 6' | 50.9 | 5.2 | 2.6 | 10.4 |
| 3' | 148 | 3.2 | 1.8 | 5.2 |
| 4' | 83.3 | 4.3 | 2.4 | 6.9 |
| 5' | 53.3 | 5.4 | 3 | 8.7 |
| 6' | 37 | 6.5 | 3.6 | 10.4 |
| 3' | 89.1 | 2.8 | 2.8 | 5.2 |
| 4' | 50.1 | 3.8 | 3.8 | 6.9 |
| 5' | 32.1 | 4.8 | 4.6 | 8.7 |
| 6' | 22.3 | 5.7 | 5.6 | 10.4 |

**60 deg Aiming Angle Vertical Footcandles on Wall**

| D | FC | L | W | CB |
|---|---|---|---|---|
| 3' | 936.8 | 0.8 | 0.8 | 1.7 |
| 4' | 526.9 | 1.1 | 1 | 2.3 |
| 5' | 337.2 | 1.5 | 1.2 | 2.9 |
| 6' | 234.2 | 1.8 | 1.6 | 3.5 |
| 3' | 594.1 | 1.3 | 1.2 | 1.7 |
| 4' | 334.2 | 1.8 | 1.6 | 2.3 |
| 5' | 213.9 | 2.3 | 2 | 2.9 |
| 6' | 148.5 | 2.6 | 2.4 | 3.5 |
| 3' | 248.6 | 2.1 | 2.2 | 1.7 |
| 4' | 139.8 | 2.8 | 2.8 | 2.3 |
| 5' | 89.5 | 3.6 | 3.6 | 2.9 |
| 6' | 62.1 | 4.3 | 4.4 | 3.5 |

### 35W

**Color Temp =** 3000K
**4000K Multiplier =** 1.25

**0 deg Aiming Angle Horizontal Footcandles**

| | MH | FC | L | W |
|---|---|---|---|---|
| Spot: 12° | 5' | 1170.1 | 1 | 1 |
| CBCP: 29149 | 7.5' | 520 | 1.4 | 1.4 |
| Lumens: 2404 | 10' | 292.5 | 2 | 2 |
| LpW: 68.9 | 12.5' | 187.2 | 2.4 | 2.4 |
| | 15' | 130 | 3 | 3 |
| Narrow Flood: 24° | 5' | 397.1 | 2 | 2 |
| CBCP: 9865 | 7.5' | 176.5 | 3 | 3 |
| Lumens: 2272 | 10' | 99.3 | 4 | 4 |
| LpW: 65.1 | 12.5' | 63.5 | 5 | 5 |
| | 15' | 44.1 | 6 | 6 |
| Flood: 33° | 5' | 261.2 | 2.6 | 2.6 |
| CBCP: 6485 | 7.5' | 116.1 | 4 | 4 |
| Lumens: 2293 | 10' | 65.3 | 5.2 | 5.2 |
| LpW: 65.7 | 12.5' | 41.8 | 6.6 | 6.6 |
| | 15' | 29 | 8 | 8 |

**30 deg Aiming Angle Horizontal Footcandles**

| MH | FC | L | W | CB |
|---|---|---|---|---|
| 5' | 767.4 | 1.3 | 1 | 2.9 |
| 7.5' | 341.1 | 1.9 | 1.6 | 4.3 |
| 10' | 191.9 | 2.6 | 2.2 | 5.8 |
| 12.5' | 122.8 | 3.2 | 2.8 | 7.2 |
| 15' | 85.3 | 3.9 | 3.4 | 8.7 |
| 5' | 274.9 | 2.5 | 2.2 | 2.9 |
| 7.5' | 122.2 | 3.8 | 3.2 | 4.3 |
| 10' | 68.7 | 5.1 | 4.4 | 5.8 |
| 12.5' | 44 | 6.4 | 5.6 | 7.2 |
| 15' | 30.5 | 7.7 | 6.6 | 8.7 |
| 5' | 185.6 | 3.2 | 2.8 | 2.9 |
| 7.5' | 82.5 | 4.9 | 4.4 | 4.3 |
| 10' | 46.4 | 6.5 | 5.8 | 5.8 |
| 12.5' | 29.7 | 8.2 | 7.2 | 7.2 |
| 15' | 20.6 | 9.9 | 8.8 | 8.7 |

**30 deg Aiming Angle Vertical Footcandles on Wall**

| D | FC | L | W | CB |
|---|---|---|---|---|
| 3' | 449.5 | 2.1 | 1 | 5.2 |
| 4' | 252.8 | 2.8 | 1.4 | 6.9 |
| 5' | 161.8 | 3.5 | 1.8 | 8.7 |
| 6' | 112.4 | 4.3 | 2.2 | 10.4 |
| 3' | 199.7 | 3.3 | 2 | 5.2 |
| 4' | 112.4 | 4.5 | 2.6 | 6.9 |
| 5' | 71.9 | 5.7 | 3.2 | 8.7 |
| 6' | 49.9 | 6.8 | 4 | 10.4 |
| 3' | 150.8 | 3.4 | 2.4 | 5.2 |
| 4' | 84.8 | 4.5 | 3.4 | 6.9 |
| 5' | 54.3 | 5.6 | 4.2 | 8.7 |
| 6' | 37.7 | 6.8 | 5 | 10.4 |

**60 deg Aiming Angle Vertical Footcandles on Wall**

| D | FC | L | W | CB |
|---|---|---|---|---|
| 3' | 2131.7 | 0.7 | 0.6 | 1.7 |
| 4' | 1199.1 | 1 | 0.8 | 2.3 |
| 5' | 767.4 | 1.3 | 1 | 2.9 |
| 6' | 532.9 | 1.5 | 1.2 | 3.5 |
| 3' | 763.5 | 1.4 | 1.2 | 1.7 |
| 4' | 429.5 | 2 | 1.8 | 2.3 |
| 5' | 274.9 | 2.5 | 2.2 | 2.9 |
| 6' | 190.9 | 3 | 2.6 | 3.5 |
| 3' | 515.5 | 1.9 | 1.6 | 1.7 |
| 4' | 290 | 2.6 | 2.2 | 2.3 |
| 5' | 185.6 | 3.2 | 2.8 | 2.9 |
| 6' | 128.9 | 3.9 | 3.4 | 3.5 |

**Notes and Definitions:**
Beam spread is to 50% center beam candlepower (CBCP.)
D=Distance in feet to floor or wall.
FC=Footcandles on floor or wall at center beam aiming location.
L =Effective Visual Beam length in feet (50% of maximum footcandle level.)
W=Effective Visual Beam width in feet (50% of maximum footcandle level.)
CB=Distance in feet across or down to center beam location.

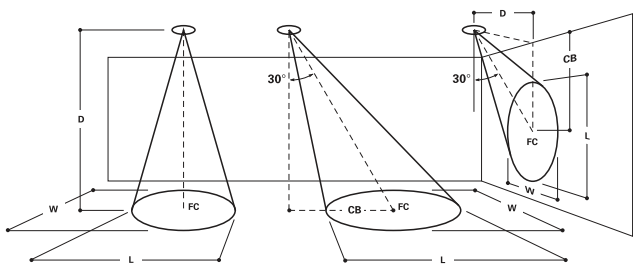


**Eaton**
1121 Highway 74 South
Peachtree City, GA 30269
P: 770-486-4800
www.eaton.com/lighting

Powering Business Worldwide

Specifications and dimensions subject to change without notice.

# CHOPPER - FAST JACK FIXTURE HEAD

ALK-09
Revision Date:

PURE EDGE LIGHTING

REV 12.05.17

DESIGNED BY GREGORY KAY | MADE IN USA

**Compatible System Connectors**

**FJ-CHO-3-PN**
Polished Nickel

**FJ-CHO-1-SN**
Satin Nickel with LED MR16

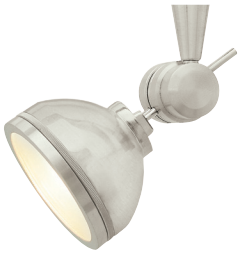

**FJ-CHO-1-SN-S6-SN**
Satin Nickel with
Satin Nickel S6 Shade

**FJ-CHO-1-PN-S7-PN**
Polished Nickel with
Polished Nickel S7 Shade

**FJ-CHO-1-BZ-LH16-BZ**
Antique Bronze with Antique
Bronze Louver Lens Holder

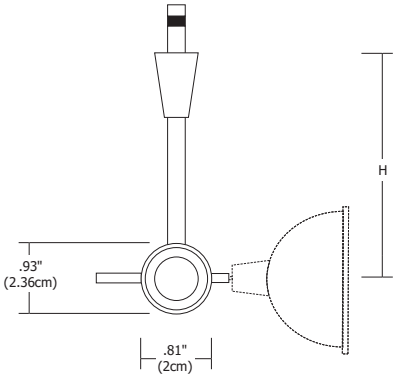


**Description:**
Combining simple shapes with beveled edges, the Chopper functions with an MR16 halogen or MR16 12VAC **LED** lamp with S7 shade or no shade. The fixture rotates 360°, tilts 270°; accommodates shades and optical accessories with louver lens holder.

**System Compatibility:**
Monorail (M) or Monorail 2 Circuit (M2). Use Fast Jack (FJ) version for FJ canopies

**Height:**
1" (2.5cm), 3" (7.6cm) 6" (15.2cm), 12" (30.5cm) or 18" (45.7cm)

**Finish:**
Satin Nickel, Polished Nickel or Antique Bronze

**Lamp Specifications:**
Maximum 75 watt MR16 lamp GU 5.3 base - 12 or 24 volt
**LED** MR16-12VAC compatible with no shade or S7 Mesh Shade (sold separately)

**Optional Shade Accessories (sold separately):**
S6 - Solid Back Shade or S7 - Mesh Back Shade

**Optical Accessories (sold separately):**
Hexcell Louver, LH16 - Louver Lens Holder, Glass Lenses or Snoot

**Weight:**
.35 - .45 lb (.16 - .20 kg)

| System | | Fixture | | Height (H) | | Finish | | Accessory | | Finish |
|---|---|---|---|---|---|---|---|---|---|---|
| FJ | – | CHO | – | 1 | – | SN | – | S6 | – | SN |

| | | | | | | | | | |
|---|---|---|---|---|---|---|---|---|---|
| **FJ** | Fast Jack | **CHO** | Chopper | **1** | 1" (2.5cm) | **SN** | Satin Nickel | **S6** | Solid Back Shade | **SN** | Satin Nickel (S6, LH16) |
| **M** | Monorail | | | **3** | 3" (7.6cm) | **PN** | Polished Nickel | **S7** | Mesh Back Shade | **PN** | Polished Nickel |
| **M2** | Monorail 2 Circuit | | | **6** | 6" (15.2cm) | **BZ** | Antique Bronze | **LH16** | Louver Lens Holder | **BZ** | Antique Bronze |
| | | | | **12** | 12" (30.5cm) | | | | | **BK** | Black (S6, S7) |
| | | | | **18** | 18" (45.7cm) | | | | | | |

| PROJECT | | FIXTURE TYPE | | DATE | |
|---|---|---|---|---|---|

HALO®

## Description

Recessed 4" aperture ultra-shallow new construction housing for use with LED integrated trims. Suitable for 2x4 residential framing or shallow plenum commercial construction, type IC rated and can be used in direct contact with insulation. Airtight rating reduces airflow between living spaces and unconditioned areas providing additional energy savings. Use with Halo LT4, RL4, RA4, SMD4, SLD4 LED integrated trims and the ML4 LED modular recessed lighting system.

| | | |
|---|---|---|
| Catalog # | H245ICAT-ML4D09NFL930E-TL43R-3G-MBBB | Type |
| Project | CFRST | ALR-01 |
| Comments | | Revision Date: |
| Prepared by | Kathleen Kenny, National Accounts, 678-447-5208, kathleenkenny@eaton.c | Date |

## Specification Features

### Housing
- Single wall deep drawn aluminum housing painted matte black for a visually dark interior
- Adjusts vertically to accommodate 1/2" to 1-1/4" thick ceilings and locks in position with (3) setscrews
- V notches on plaster lip facilitate use of guide strings or laser lines for precise positioning
- Integral gasket provides for airtight compliance
- Shipped with overspray protector installed
- Housing can be removed from below the ceiling for service or splice inspection

### Plaster Frame
- Compact galvanized steel plaster frame with integral bar hanger receivers
- Regressed screw provide positive horizontal bar hanger locking from below the ceiling
- Crimp points also provide for horizontal bar hanger locking

### Bar Hangers
- Captive preinstalled Got-Nail™ bar hangers support housing at any point along span
- Pass-N-Thru™ feature adjust from 8" to 24" wide without removal
- Score lines allow "tool-less" shortening for 12˝ joists
- Captive nail penetrates standard and engineered lumber
- Safety and guidance system prevents snagging, ensures smooth straight nail penetration and allows bar hangers to be easily removed and repositioned
- Leveling flange aligns plaster frame with structure
- Integral clip attaches directly to tee-bar

### Junction Box
- Compact galvanized steel junction box with 15in$^3$ internal volume
- Listed for (10) #12 AWG 90˚ C splice conductors
- (5) ½" conduit pry-outs positioned to allow straight conduit runs
- (3) Slide-N-Side™ non-metallic (NM) wire traps allows wiring outside the box
- Accepts 14-2, 14-3, 12-2, 12-3 U.S. and 14-2, 14-3, 12-2 Canadian NM cable
- (3) 4-port push wire nuts with clear caps for quick and reliable mains voltage connections

### Connector
- Two-conductor wire mount connector is rated for 120/277V and mates with Halo LT4, RL4, RA4, SLD, SMD and ML4 family of LED integrated trims.
  **CAUTION:** verify LED module input voltage is compatible with the input voltage of the housing. If uncertain, consult a qualified electrician

### Code Compliance
- Type IC inherently protected, suitable for direct contact to air permeable insulation and cULus listed for damp locations
- Not for use in direct contact with spray foam insulation, consult NEMA LSD57-2013
- Wet location listed in covered ceilings and IP66 certified with select trims
- Airtight per ASTM-E283
- Can be used for State of California Title 24 high efficacy luminaire compliance
- Suitable for use in clothes closets when installed in accordance with the NEC 410.16 spacing requirements
- Contains no mercury or lead and RoHS compliant

### Warranty
- Five year limited warranty, consult website for details www.eaton.com/lighting/legal

# H245ICAT

**4" Ultra-Shallow Recessed New Construction Housing**

**For Integrated LED Trims and Modules**

**15W Maximum**

## Dimensions

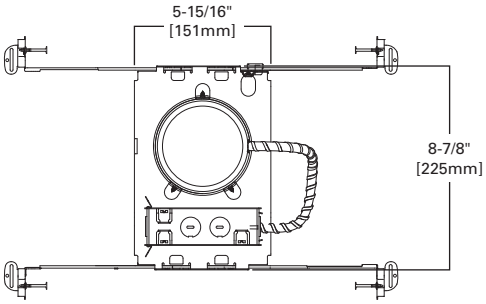


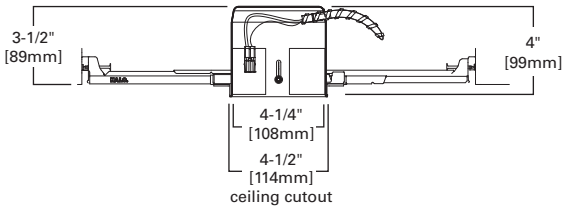


## Ordering Information

A complete luminaire consists of a housing, LED module and trim, order separately.

| Housing | Trims |
|---|---|
| **H245ICAT**= 4" ultra-shallow new construction housing for LED integrated trims or modules | LT4<br>RA4<br>RL4<br>ML4<br>SMD4<br>SLD4 |

airLite™

Efficiency Standards T24 California Title 24 Residential and Non-Residential Compliant

## Description

Recessed LED module with interchangeable 2-inch round or square lens pinhole apertures are available in various finishes to suit any décor. Use with 4-inch nominal recessed housings suitable for residential and shallow plenum commercial construction or can be used to retrofit existing installations. Field interchangeable primary optics provide various distribution patterns and spacing to mounting height ratios. Use for general and task lighting in low to medium height ceilings where energy savings, long life and optical control are required.

| | | |
|---|---|---|
| Catalog # | H245ICAT-ML4D09NFL9 | Type: ALR-01 |
| Project | CFRST | Revision Date: |
| Comments | | Date |
| Prepared by | Kathleen Kenny, National | |

## Specification Features

### Module
- Field interchangeable and upgradable LED module consists of LED array, primary optic and driver.
- Integral die cast aluminum heat sink provides passive thermal cooling achieving L70 at 50,000 hours in IC and non-IC applications.

### Retention
- Heat treated compression springs hold module securely in the housing, can be removed thru the aperture for service or replacement

### LED Array
- Proximity phosphors over chip on board LEDs provide a uniform source with high efficiency and no pixilation.
- Available in 90 CRI minimum, R9 greater than 50 and color accuracy within 3 SDCM provide color accuracy and uniformity.
- Compatible with Zhaga book 12 standards for interchangeability and can be replaced in the field

### Gaskets
- Closed cell gaskets achieve restrictive airflow requirements without additional caulking

### Primary Optic
- Precision molded TIR optic organizes source flux into useful beams without stray lumens in the field.
- Two-piece construction with matte black mounting ring and polarized turn and lock mounting aligns optic to source and minimizes backlight in the housing.
- Exceeds ENERGY STAR® color angular uniformity requirements, color deviation is typically less than 0.002 u' v'.
- Available in narrow flood, flood and wide flood distributions, ordered separately, ships with narrow flood installed.
- Also available in asymmetric distribution providing vertical illumination

### Trims
- Die formed steel trims are available in 2-inch round or square pinhole apertures and can be interchanged in the field.
- Available in a broad range of painted or plated finishes, can be painted in the field to match any décor.
- Magnetic attachment holds trim tightly to ceiling and eliminates light leaks.

### Shielding
- Diffuse clear lens provides light control and source shielding.

### Driver
- Integral UNV 120 - 277V 50/60 Hz constant current driver provides noise free operation.
- Continuous, flicker-free dimming from 100% to 5% with select leading or trailing edge 120V phase cut dimmers.
- Inline electrical quick connect and E26 adapter (provided) provides mains connection.
- Driver can be replaced in the field.

### Compliance
- cULus listed / certified for use with Halo housings, classified for use with other's housings, see instruction sheet for conditions of acceptability.
- Wet location listed in covered ceilings and IP65 certified.
- Airtight per ASTM-E283.
- Suitable for use in clothes closets when installed in accordance with the NEC 410.16 spacing requirements
- EMI/RFI emissions per FCC 47CFR Part 15 B.
- Contains no mercury or lead and RoHS compliant.
- Photometric testing in accordance with IES LM-79-08.
- Lumen maintenance projections in accordance with IES LM-80-08 and TM-21-11.
- Can be used for State of California Title 24 high efficacy luminaire compliance, reference the California Energy Commission Title 20 Appliance Efficiency Database for current listings.
- ENERGY STAR® listed, reference qualified product listings.
- Meets State of California voluntary lamp standards.
- Zhaga book 12 compatible.

### Warranty
Five year limited warranty, consult website for details.
www.eaton.com/lighting//Legal

ENERGY STAR

T24 Can be used to comply with California Title 24 High Efficacy requirements
T20 Certified to California Title 20 Appliance Database

Refer to ENERGY STAR® Certified Products List.
Can be used to comply with California Title 24 High Efficacy requirements.
Certified to California Title 20 Appliance Efficiency Database.

Zhaga

Eaton is a founding member of the Zhaga Consortium

# ML4D
# TL43R
# TL44S

**900 Lumen Series**

**LED**

**2-Inch Round and Square Lens Pinhole Downlight**

90 CRI

nominal CCT: 2700K 3000K 3500K 4000K

| ENERGY DATA | | |
|---|---|---|
| Lumens | 900 Series | |
| Input Voltage | 120V | 277V |
| Input Current | 101.6 (mA) | 45.7 (mA) |
| Input Power | 12.1 (W) | 11.9 (W) |
| Efficiency | 84.93 % | 83.45 % |
| Inrush (A) | 1.3 | 4.7 |
| THD: ≤ 20% | | |
| PF: ≥ 0.90 | | |
| T Ambient -40 - +40°C | | |
| Sound Rating ≤ 20dba | | |

## Dimensions

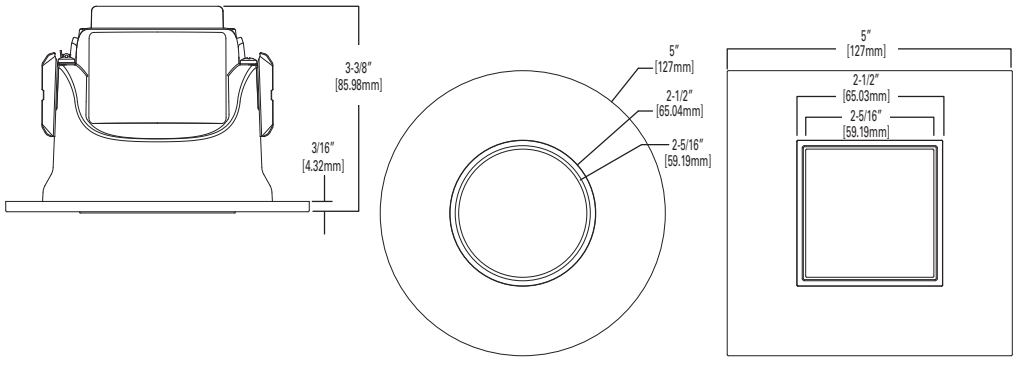

## Ordering Information

**SAMPLE NUMBER:** ML4D09NFL927E - TL43R2GMWWB
A complete luminaire consists of a housing, LED module and trim, order separately.

| Models | Lumens | Distribution | CRI/CCT | Driver | Accessories |
|---|---|---|---|---|---|
| **ML4D**= 4" LED module | **09**=900 lumens (nominal) | **NFL**=25 degree narrow flood | **927**=90 CRI , 2700K<br>**930**=90 CRI , 3000K<br>**935**=90 CRI , 3500K<br>**940**=90 CRI , 4000K | **E**=UNV 120 - 277V 50-60Hz, LE & TE phase cut 5% dimming at 120V only | **TIR50AWW25** =asymmetric wall wash<br>**TIR50NFL25**=25° narrow flood<br>**TIR50FL40**=40° flood<br>**TIR50WFL55**=55° wide flood<br>**LH501MB12PK**=Media holder for (1) 50mm lens, matte black, 12 pack |

| Trims | Shielding | Flange Finish | Accessories |
|---|---|---|---|
| **TL43R**= 2" round lens pinhole<br>**TL44S**= 2" square lens pinhole | **2G**=Diffuse clear | **MWWB**=Matte white flange, white lens frame<br>**MWBB**=Matte white flange, black lens frame<br>**MBBB**=Matte black flange, black lens frame<br>**BNBB**=Brushed nickel flange, black lens frame<br>**ORBBB**=Oil rubbed bronze flange, black lens frame<br>**GBBB**=German bronze flange, black lens frame<br>**BCuBB**=Brushed copper, black lens frame | **T24HWKIT**=Title 24 hard wire kit, converts incandescent, low voltage and compact fluorescent housings to LED |

### Housings

**H245RICAT**=4" IC, airtight ultra-shallow remodeler housing, LED, 120 - 277V
**H99TAT**=4" non-IC, airtight shallow new construction housing, E26, 120V
**H99RTAT**=4" non-IC, airtight shallow remodeler housing, E26, 120V
**H99ICAT**=4" IC, airtight shallow new construction housing, E26, 120V
**H995ICAT**=4" IC, airtight shallow new construction housing, LED, 120 - 277V
**H995RICAT**=4" IC, airtight shallow remodeler housing, LED, 120 - 277V
**E4TATSB**=4" non-IC, airtight shallow new construction housing, adjustable socket bracket, E26, 120V
**E4RTATSB**=4" non-IC, airtight shallow remodeler housing, adjustable socket bracket, E26, 120V
**E4ICATSB**=4" non-IC, airtight shallow new construction housing, adjustable socket bracket, E26, 120V
**H4NCMF**=4" new construction mounting frame
**HS4R**=Surface round, 120-277V
**HS4S**=Surface square, 120-277V



**Eaton**
1121 Highway 74 South
Peachtree City, GA 30269
P: 770-486-4800
www.eaton.com/lighting

Specifications and dimensions subject to change without notice.

## Photometry

### ML4D09NFL930-TIR50NFL25-TL43R2G_X_ TL44S2GX

| | |
|---|---|
| Description | Halo 2 Inch ML4 Round And Square Lensed Downlight-Narrow Flood Distribution |
| Test Number | P189395 |
| Module | 900 Series, 90CRI, Narrow Flood optic |
| Trim | 2" Aperture, Open Round DL |
| Lumens | 916 Lm |
| Efficacy | 79.83 |
| Spacing Criteria | 0.39 |
| CPCB | 4688.3 |
| Beam Angle (FWHM) | 26.6 |

**Color Metric Summary**

| | |
|---|---|
| TM-30-15 | $R_f$ = 91.5 |
| | $R_g$ = 97.7 |
| CRI/ CIE | $R_a$ = 92.8 |
| | $R_9$ = 57.4 |

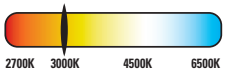

**Candlepower Distribution**

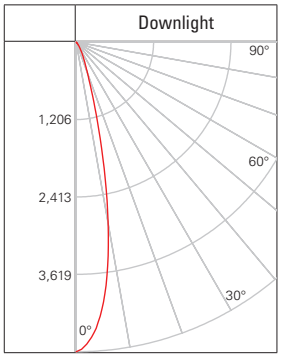


**Candelas at Nadir**

| Angle | 0-deg |
|---|---|
| 0 | 4688 |
| 5 | 4166 |
| 10 | 2790 |
| 20 | 504 |
| 30 | 139 |
| 40 | 39 |
| 50 | 11 |
| 60 | 5 |
| 70 | 3 |
| 80 | 2 |
| 90 | 0 |

**Foot-candle Values at Nadir**

| 0 deg Aiming Angle | | |
|---|---|---|
| DD | FC | DIA |
| 5.5' | 155 | 2 |
| 7' | 95.7 | 2.6 |
| 8' | 73.3 | 3 |
| 9' | 57.9 | 3.4 |
| 10' | 46.9 | 3.8 |
| 12' | 32.6 | 4.6 |

DD = distance down to illuminated work plane
FC = initial foot-candles at nadir
DIA = diameter

### ML4D09NFL930-TIR50FL40-TL43R2G_X_ TL44S2GX

| | |
|---|---|
| Description | Halo 2 Inch ML4 Round And Square Lensed Downlight- Flood Distribution |
| Test Number | P189401 |
| Module | 900 Series, 90CRI, Flood optic |
| Trim | 2" Aperture, Open Round DL |
| Lumens | 919 Lm |
| Efficacy | 78.94 |
| Spacing Criteria | 0.64 |
| CPCB | 1868 |
| Beam Angle (FWHM) | 39.3 |

**Color Metric Summary**

| | |
|---|---|
| TM-30-15 | $R_f$ = 91.4 |
| | $R_g$ = 97.7 |
| CRI/ CIE | $R_a$ = 92.7 |
| | $R_9$ = 57.2 |

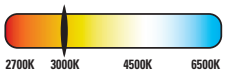


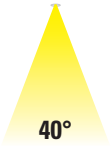


**Candlepower Distribution**

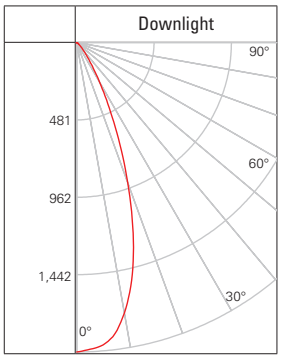


**Candelas at Nadir**

| Angle | 0-deg |
|---|---|
| 0 | 1868 |
| 5 | 1832 |
| 10 | 1658 |
| 20 | 903 |
| 30 | 278 |
| 40 | 70 |
| 50 | 21 |
| 60 | 8 |
| 70 | 4 |
| 80 | 2 |
| 90 | 0 |

**Foot-candle Values at Nadir**

| 0 deg Aiming Angle | | |
|---|---|---|
| DD | FC | DIA |
| 5.5' | 61.8 | 3.4 |
| 7' | 38.1 | 4.4 |
| 8' | 29.2 | 5 |
| 9' | 23.1 | 5.8 |
| 10' | 18.7 | 6.4 |
| 12' | 13 | 7.6 |

DD = distance down to illuminated work plane
FC = initial foot-candles at nadir
DIA = diameter

### ML4D09NFL930-TIR50WFL55-TL43R2G_X_ TL44S2GX

| | |
|---|---|
| Description | Halo 2 Inch ML4 Round And Square Lensed Downlight-Wide Flood Distribution |
| Test Number | P189407 |
| Module | 900 Series, 90CRI, Wide Flood optic |
| Trim | 2" Aperture, Open Round DL |
| Lumens | 857 Lm |
| Efficacy | 74.41 |
| Spacing Criteria | 0.78 |
| CPCB | 1032.3 |
| Beam Angle (FWHM) | 52.1 |

**Color Metric Summary**

| | |
|---|---|
| TM-30-15 | $R_f$ = 91.4 |
| | $R_g$ = 97.6 |
| CRI/ CIE | $R_a$ = 92.7 |
| | $R_9$ = 57.1 |

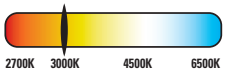


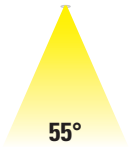


**Candlepower Distribution**

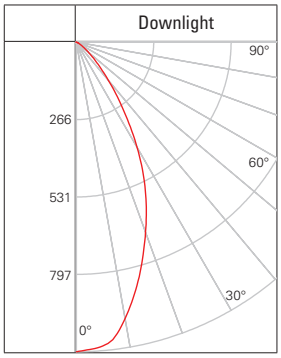


**Candelas at Nadir**

| Angle | 0-deg |
|---|---|
| 0 | 1032 |
| 5 | 1017 |
| 10 | 936 |
| 20 | 675 |
| 30 | 406 |
| 40 | 166 |
| 50 | 54 |
| 60 | 16 |
| 70 | 5 |
| 80 | 1 |
| 90 | 0 |

**Foot-candle Values at Nadir**

| 0 deg Aiming Angle | | |
|---|---|---|
| DD | FC | DIA |
| 5.5' | 34.1 | 4.2 |
| 7' | 21.1 | 5.4 |
| 8' | 16.1 | 6.2 |
| 9' | 12.7 | 7 |
| 10' | 10.3 | 7.8 |
| 12' | 7.2 | 9.2 |

DD = distance down to illuminated work plane
FC = initial foot-candles at nadir
DIA = diameter

### ML4D09NFL930-TIR50AWW25-TL43R2GMWWB_ TL44S2GMWWB

| | |
|---|---|
| Description | Halo 2 Inch ML4 Round And Square Lensed Downlight-Asymmetric |
| Test Number | P189448 |
| Module | 900 Series, 90CRI, Asymmetric |
| Trim | 2" Aperture, Open Round DL |
| Lumens | 683 Lm |
| Efficacy | 61.03 |
| Spacing Criteria | 1.51 |
| Peak intensity | 2070 |
| Peak angle | 23 |

**Color Metric Summary**

| | |
|---|---|
| TM-30-15 | $R_f$ = 91.4 |
| | $R_g$ = 97.6 |
| CRI/ CIE | $R_a$ = 92.7 |
| | $R_9$ = 57.0 |

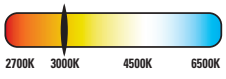


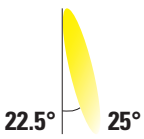


**Candlepower Distribution**

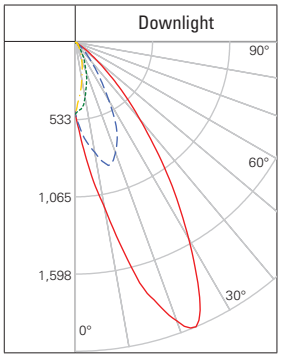


**Candelas at Nadir**

| Angle | 0-deg |
|---|---|
| 0 | 479 |
| 5 | 751 |
| 10 | 1115 |
| 20 | 1986 |
| 30 | 1520 |
| 40 | 675 |
| 50 | 190 |
| 60 | 27 |
| 70 | 2 |
| 80 | 2 |
| 90 | 0 |

**Single Unit Footcandles 2.5' from wall**
**(distance from fixture along wall)**

| DD | • |
|---|---|
| 1' | 0.4 |
| 2' | 12.2 |
| 3' | 28.9 |
| 4' | 31.8 |
| 5' | 26.5 |
| 6' | 18.8 |
| 7' | 12 |
| 8' | 7.8 |
| 9' | 5.2 |
| 10' | 3.6 |

**Multiplier Table**

| CCT Option | 2700K | 3000K | 3500K | 4000K |
|---|---|---|---|---|
| CCT Multiplier | 0.946 | 1.000 | 1.020 | 1.042 |

Representative photometric test report for 3000K color temperature, 90CRI.
Multipliers may be used to determine relative lumen values with other color temperatures.

Eaton
1121 Highway 74 South
Peachtree City, GA 30269
P: 770-486-4800
www.eaton.com/lighting

Specifications and dimensions subject to change without notice.

HALO®

## Description

Recessed 4" aperture ultra-shallow new construction housing for use with LED integrated trims. Suitable for 2x4 residential framing or shallow plenum commercial construction, type IC rated and can be used in direct contact with insulation. Airtight rating reduces airflow between living spaces and unconditioned areas providing additional energy savings. Use with Halo LT4, RL4, RA4, SMD4, SLD4 LED integrated trims and the ML4 LED modular recessed lighting system.

| | | |
|---|---|---|
| Catalog # | | Type: **ALR-03** |
| Project | | Revision Date: |
| Comments | | Date |
| Prepared by | | |

## Specification Features

### Housing
- Single wall deep drawn aluminum housing painted matte black for a visually dark interior
- Adjusts vertically to accommodate 1/2" to 1-1/4" thick ceilings and locks in position with (3) setscrews
- V notches on plaster lip facilitate use of guide strings or laser lines for precise positioning
- Integral gasket provides for airtight compliance
- Shipped with overspray protector installed
- Housing can be removed from below the ceiling for service or splice inspection

### Plaster Frame
- Compact galvanized steel plaster frame with integral bar hanger receivers
- Regressed screw provide positive horizontal bar hanger locking from below the ceiling
- Crimp points also provide for horizontal bar hanger locking

### Bar Hangers
- Captive preinstalled Got-Nail™ bar hangers support housing at any point along span
- Pass-N-Thru™ feature adjust from 8" to 24" wide without removal
- Score lines allow "tool-less" shortening for 12˝ joists
- Captive nail penetrates standard and engineered lumber
- Safety and guidance system prevents snagging, ensures smooth straight nail penetration and allows bar hangers to be easily removed and repositioned
- Leveling flange aligns plaster frame with structure
- Integral clip attaches directly to tee-bar

### Junction Box
- Compact galvanized steel junction box with 15in$^3$ internal volume
- Listed for (10) #12 AWG 90˚ C splice conductors
- (5) ½" conduit pry-outs positioned to allow straight conduit runs
- (3) Slide-N-Side™ non-metallic (NM) wire traps allows wiring outside the box
- Accepts 14-2, 14-3, 12-2, 12-3 U.S. and 14-2, 14-3, 12-2 Canadian NM cable
- (3) 4-port push wire nuts with clear caps for quick and reliable mains voltage connections

### Connector
- Two-conductor wire mount connector is rated for 120/277V and mates with Halo LT4, RL4, RA4, SLD, SMD and ML4 family of LED integrated trims.
  **CAUTION:** verify LED module input voltage is compatible with the input voltage of the housing. If uncertain, consult a qualified electrician

### Code Compliance
- Type IC inherently protected, suitable for direct contact to air permeable insulation and cULus listed for damp locations
- Not for use in direct contact with spray foam insulation, consult NEMA LSD57-2013
- Wet location listed in covered ceilings and IP66 certified with select trims
- Airtight per ASTM-E283
- Can be used for State of California Title 24 high efficacy luminaire compliance
- Suitable for use in clothes closets when installed in accordance with the NEC 410.16 spacing requirements
- Contains no mercury or lead and RoHS compliant

### Warranty
- Five year limited warranty, consult website for details www.eaton.com/lighting/legal

# H245ICAT

**4" Ultra-Shallow Recessed New Construction Housing**

**For Integrated LED Trims and Modules**

**15W Maximum**

## Dimensions

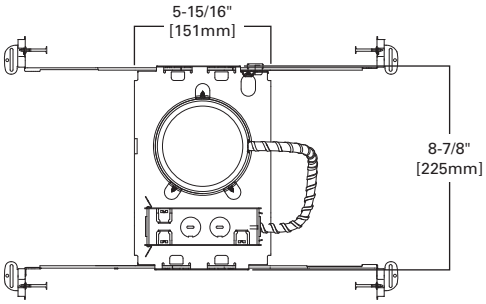


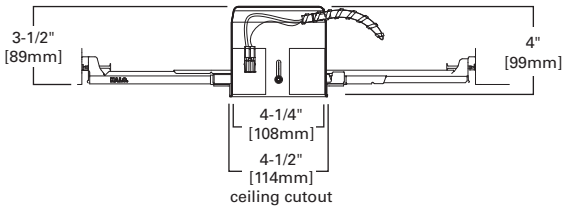


## Ordering Information

A complete luminaire consists of a housing, LED module and trim, order separately.

| Housing | Trims |
|---|---|
| **H245ICAT**= 4" ultra-shallow new construction housing for LED integrated trims or modules | LT4<br>RA4<br>RL4<br>ML4<br>SMD4<br>SLD4 |

airLite™

Efficiency Standards T24 California Title 24 Residential and Non-Residential Compliant


Eaton
1121 Highway 74 South
Peachtree City, GA 30269
P: 770-486-4800
www.eaton.com/lighting


Powering Business Worldwide

Specifications and dimensions subject to change without notice.

## HALO LED ICAT HOUSING for NEW CONSTRUCTION

The H750ICAT is a dedicated LED new construction housing to be used with designated HALO LED modules.The H750ICAT is designed for insulated ceilings and can be in direct contact with ceiling insulation*. This AIRTITE housing design prevents airflow between conditioned and unconditioned spaces and saves on both heating and air conditioning costs. The LED connector system provides high efficacy code compliance when used with designated HALO LED modules and trims.

HALO®

| | | |
|---|---|---|
| Catalog # | H750ICAT-ML5606927- | Type |
| Project | Aloft | ALR-04 |
| Comments | | Revision Date: |
| Prepared by | Kathleen Kenny, | Date |

## DESIGN FEATURES

**Housings**
Aluminum construction for greater heat dissipation. H750 ICAT housing is gasketed to prevent airflow from heated or air conditioned spaces.

**Plaster Frame**
Galvanized steel frame. Housing adjusts in plaster frame to accommodate up to 1" ceiling thickness. Regressed locking screw for securing hanger bars. Cutouts included for easily crimping hanger bars in position

**Slide-N-Side™ Junction Box**
- Positioned to accommodate straight conduit runs.
- Seven ½" trade size conduit knockouts with true pry-out slots.
- Slide-N-Side wire traps allow non metallic sheathed cable to be installed without tools and without removing knockouts.
- Allows wiring connections to be made outside the box.
- Simply insert the cable directly into the trap after connections are made.
- Accommodates the following standard non-metallic sheathed cable type:
- U.S. #14/2, #14/3, #12/2, #12/3
- Canada: #14/2, #14/3, #12/2

**GOT NAIL! Pass -N-Thru™ Bar Hangers**

Bar Hanger features include
- Pre-installed nail easily installs in regular lumber, engineered lumber and laminated beams.
- Safety and Guidance system prevents snagging, ensures smooth, straight nail penetration and allows bar hangers to be easily removed if necessary
- Automatic leveling flange aligns the housing and allows holding the housing in place with one hand while driving nails.
- Housing can be positioned at any point within 24" joist spans
- Score lines allow tool-free shortening for 12" joists and bar hangers do not need to be removed for shortening.
- Bar hangers may be repositioned 90° on plaster frame
- Integral T-bar clip snaps onto T-bars – no additional clips are required.

**LED Module Connection**
Halo LED modules simply install with a plug-in 120V-277V rated line voltage wiring connector (UL and CSA Listed Luminaire Disconnect). This non-screw-base connection preserves the high efficacy rating and prevents use of low efficacy incandescent sources (see LED Module specifications).

**Caution**
Connection is rated for 120V and 277V input. Installer must verify LED module voltage is compatible with the applicable voltage input. If uncertain, consult a qualified electrician.

**Labels**
- UL/cUL Listed 1598 Luminaire
- CE Marking - "Conformité Européene" conformity with the Council of European Communities Directives, meeting internationally recognized compliance when used with ML56 Series LED modules
- UL/cUL Listed for Feed Through
- UL/cUL Listed for Damp Location
- UL/cUL Listed for Wet Location with select trims
- UL/cUL Listed for direct contact with insulation and combustible material*
- Rated for 20W maximum

**Qualification**
May be used with qualified Halo LED modules and designated trims for High Efficacy Luminaire Compliance:
- State of California Title 24
- International Energy Conservation Code (IECC)
- Washington State Energy Code
- New York State Energy Conservation Construction Code - AIR-TITE™ Compliant
- Certified under ASTM-E283 standard for air-tight construction

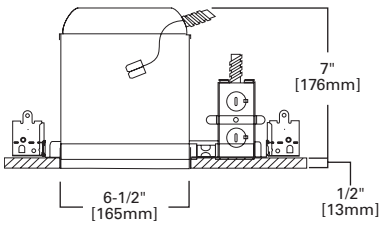


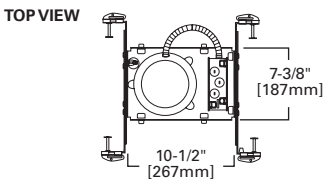

## H750ICAT

**6" New Construction IC AIR-TITE™ Housing For Halo LED Modules and Trims**
**- ML56 Series**
**- RL56 Series**
**- RA56 Series**

**High Efficacy LED Housing**

**FOR USE IN INSULATED CEILINGS**

**FOR DIRECT CONTACT WITH INSULATION***

Qualified and compliant with select trims. Refer to ENERGY STAR® Qualified Products List and CEC (T24) Appliance Database for listings.

* Not to be used in direct contact with spray foam insulation.

ALR-04
Revision Date:

## ORDERING INFORMATION - RL56 SERIES

**SAMPLE NUMBER:** H750ICAT - RL560WH6927
Order housing, light module, trim and separately.

| Housing | RL56 LED - Compatible LED Retrofit Modules |
|---|---|
| **H750ICAT**= 6" Aperture, New Construction, IC AIR-TITE™, High Efficacy LED Housing | **80 CRI**<br>**RL560WH6827**= 5"/6" Retrofit Baffle - Trim LED Module, 80CRI, 2700K, Matte White<br>**RL560SN6827**= 5"/6" Retrofit Baffle - Trim LED Module, 80CRI, 2700K, Satin Nickel<br>**RL560WH6830**= 5"/6" Retrofit Baffle - Trim LED Module, 80CRI, 3000K, Matte White<br>**RL560SN6830**= 5"/6" Retrofit Baffle - Trim LED Module, 80CRI, 3000K, Satin Nickel<br>**RL560WH6835**= 5"/6" Retrofit Baffle - Trim LED Module, 80CRI, 3500K, Matte White<br><br>**90 CRI**<br>**RL560WH6927**= 5"/6" Retrofit Baffle - Trim LED Module, 90CRI, 2700K, Matte White<br>**RL560SN6927**= 5"/6" Retrofit Baffle - Trim LED Module, 90CRI, 2700K, Satin Nickel<br>**RL560WH6930**= 5"/6" Retrofit Baffle - Trim LED Module, 90CRI, 3000K, Matte White<br>**RL560SN6930**= 5"/6" Retrofit Baffle - Trim LED Module, 90CRI, 3000K, Satin Nickel<br>**RL560WH6935**= 5"/6" Retrofit Baffle - Trim LED Module, 90CRI, 3500K, Matte White |

## ORDERING INFORMATION - RA56 SERIES

**SAMPLE NUMBER:** H750ICAT - RA5606927WH
Order housing, light module, trim and separately.

| Housing | RA56 LED - Compatible LED Retrofit Modules |
|---|---|
| **H750ICAT**= 6" Aperture, New Construction, IC AIR-TITE™, High Efficacy LED Housing | **Very Wide Flood - VWFL Models**<br>**RA5606927WH**= 5"/6" LED Adjustable Gimbal, 90CRI, 2700K, White, Very Wide Flood<br>**RA5606930WH**= 5"/6" LED Adjustable Gimbal, 90CRI, 3000K, White, Very Wide Flood<br><br>**Narrow Flood - NFL Models**<br>**RA5606927NFLWH**= 5"/6" LED Adjustable Gimbal, 90CRI, 2700K, White, Narrow Flood<br>**RA5606930NFLWH**= 5"/6" LED Adjustable Gimbal, 90CRI, 3000K, White, Narrow Flood |

## ORDERING INFORMATION - ML56 SERIES

**SAMPLE NUMBER:** H750ICAT - ML5606830 - 693WB
Order housing, light module, trim and separately.

### Housing

**H750ICAT**= 6" Aperture, New Construction, IC AIR-TITE™, High Efficacy LED Housing

### ML56 LED Light Modules

**600 Series / 80 CRI**
**ML5606827**= 5"/6" LED Retrofit Downlight Light Module, 600 lumen, 80CRI, 2700K
**ML5606830**= 5"/6" LED Retrofit Downlight Light Module, 600 lumen, 80CRI, 3000K
**ML5606835**= 5"/6" LED Retrofit Downlight Light Module, 600 lumen, 80CRI, 3500K
**ML5606840**= 5"/6" LED Retrofit Downlight Light Module, 600 lumen, 80CRI, 4000K

**600 Series / 90 CRI**
**ML5606927**= 5"/6" LED Retrofit Downlight Light Module, 600 lumen, 90CRI, 2700K
**ML5606930**= 5"/6" LED Retrofit Downlight Light Module, 600 lumen, 90CRI, 3000K
**ML5606935**= 5"/6" LED Retrofit Downlight Light Module, 600 lumen, 90CRI, 3500K
**ML5606940**= 5"/6" LED Retrofit Downlight Light Module, 600 lumen, 90CRI, 4000K

**900 Series / 80 CRI**
**ML5609827**= 5"/6" LED Retrofit Downlight Light Module, 900 lumen, 80CRI, 2700K
**ML5609830**= 5"/6" LED Retrofit Downlight Light Module, 900 lumen, 80CRI, 3000K
**ML5609835**= 5"/6" LED Retrofit Downlight Light Module, 900 lumen, 80CRI, 3500K
**ML5609840**= 5"/6" LED Retrofit Downlight Light Module, 900 lumen, 80CRI, 4000K

**900 Series / 90 CRI**
**ML5609927**= 5"/6" LED Retrofit Downlight Light Module, 900 lumen, 90CRI, 2700K
**ML5609930**= 5"/6" LED Retrofit Downlight Light Module, 900 lumen, 90CRI, 3000K
**ML5609935**= 5"/6" LED Retrofit Downlight Light Module, 900 lumen, 90CRI, 3500K
**ML5609940**= 5"/6" LED Retrofit Downlight Light Module, 900 lumen, 90CRI, 4000K

**1200 Series / 80 CRI**
**ML5612827**= 5"/6" LED Light Module, 1200 lumen, 80CRI, 2700K
**ML5612830**= 5"/6" LED Light Module, 1200 lumen, 80CRI, 3000K
**ML5612835**= 5"/6" LED Light Module, 1200 lumen, 80CRI, 3500K
**ML5612840**= 5"/6" LED Light Module, 1200 lumen, 80CRI, 4000K

**1200 Series / 90 CRI**
**ML5612927**= 5"/6" LED Light Module, 1200 lumen, 90CRI, 2700K
**ML5612930**= 5"/6" LED Light Module, 1200 lumen, 90CRI, 3000K
**ML5612935**= 5"/6" LED Light Module, 1200 lumen, 90CRI, 3500K
**ML5612940**= 5"/6" LED Light Module, 1200 lumen, 90CRI, 4000K

### ML56 LED Trims

**690 Series - 6" LED Trims**

**Non-Conductive "Dead Front" Baffles**
**691WB**=6" LED Trim, Polymer "Dead-Front", Shallow White Baffle & Flange (For use with 600 Series LED Light Modules only)

**Reflectors**
**692SC**=6" LED Downlight Trim, Specular Reflector & White Flange
**692H**=6" LED Downlight Trim, Haze Reflector & White Flange
**692W**=6" LED Downlight Trim, White Reflector & Flange

**Baffles**
**693WB**=6" LED Downlight Trim, White Micro-Step Baffle & Flange
**693BB**=6" LED Downlight Trim, Black Micro-Step Baffle & Flange
**693SNB**=6" LED Downlight Trim, Satin Nickel Micro-Step Baffle & Flange
**693TBZB**=6" LED Downlight Trim, Tuscan Bronze Micro-Step Baffle & Flange

**Semi-Regressed Eyeballs**
**694WB**=6" LED Directional Trim, White Eyeball, Baffle & Flange
**694SNB**=6" LED Directional Trim, Satin Nickel Eyeball, Baffle & Flange
**694TBZB=**6" LED Directional Trim, Tuscan Bronze Eyeball, Baffle & Flange

**Wall Wash**
**695WW**=6" LED Downlight Trim, Wall Wash with Specular Kick Reflector & White Flange

**Shallow Baffle**
**696WB=**6" LED Trim, White Shallow Baffle & Flange

### ML56 System Accessories

**ML56CLIP=** 6" Friction Clip Kit - For use with non-torsion spring housings. 6" clips included.
**WW6955C=** Wall Wash Insert - Specular Kick Reflector for 695WW (1 included with trim). For double wall washing or replacement.
**TRM690WH=** 6" LED Oversize Trim Ring for use with 59* series trims, White 6.9" I.D., 9.5" O.D.
Ring slips over LED trim. Inset design allows 6" trim to fit into oversize ring for an even trim surface
**EBA560PK=** Replacement screwbase adapter to LED disconnect with cap

**ML56-1200 Series Beam Forming Optic Media**
**BFR56NFL=**Beam forming reflector kit, narrow flood, 25° nominal
**BFR56MH=**Media holder, accepts one 3.45" lens. Requires BFR56NFL & L345SF, order separately.
**L345SF=**3.45" diameter soft focus lens. Requires BFR56NFL and BFR56MH, order separately.

Cooper Lighting by EATON

**Eaton**
1000 Eaton Boulevard
Cleveland, OH 44122
United States
Eaton.com

**Eaton's Cooper Lighting Business**
1121 Highway 74 South
Peachtree City, GA 30269
P: 770-486-4800
www.cooperlighting.com

© 2014 Eaton
All Rights Reserved
Printed in USA
Publication No. ADV141509
June 2014

Specifications and dimensions subject to change without notice.

HALO

## Description

The Halo ML56 LED Downlighting System is a series of modular LED Light Modules for use with designated 5" or 6" ML56 LED trims in new construction, remodel and retrofit installation. Compatible with Halo 5" H550 and 6" H750, H2750 Series LED housings. And in retrofit of existing housings the ML56 Series fits 5" or 6" Halo, All-Pro, and others. ML56 system offers shallow trims for installation in Halo, All-Pro and others shallow housings. ML56 Light Modules are offered in 600 Series, 900 Series, and 1200 Series, 80CRI or 90CRI, and four color temperatures 2700K, 3000K, 3500K, 4000K. ML56 Light Modules are universal voltage 120V – 277V and dimmable at 120V. The ML56 lens provides uniform diffuse illumination standard.

| | | |
|---|---|---|
| Catalog # | H750ICAT-ML5606927-592SC | Type |
| Project | Aloft | ALR-04 |
| Comments | | Revision Date: |
| Prepared by | Kathleen Kenny, National Accounts, 678-447-5208, kathleenkenny@eaton.com | Date |

## Specification Features

### Mechanical

**Light Module**
- Module includes LED package, LED driver, heat sink, and lens
- Durable die-cast aluminum construction.
- Heat sink designed to conduct heat away from the LED keeping the junction temperatures below specified maximums, including insulated ceiling environments

**Lens**
- Impact-resistant polycarbonate
- Convex form for lamp-like appearance
- High lumen transmission
- Diffusing for even illumination

**Mounting**
- Light Modules attach to reflector and baffle trims via locking tabs, and attach to eyeballs via keyed twist-to-lock mating bosses
- The complete light module and trim assembly installs into housings with precision formed torsion springs located on the trim
- Friction Blade mounting is an alternate option using the accessory 6" Friction Blade Kit model ML56CLIP (order separately). Friction blades provide alternative to torsion springs for retrofit in 6" housings without torsion mounting tabs. The stainless steel friction blades allow the ML56 to be installed in a wider range of housings, and allow rotation in the housing aperture (360 degrees).

**Housing Compatibility**

A complete ML56 system includes a LED Light Module, LED trim, and a compatible housing (new construction, remodel, or existing retrofit). Housing compatibility in the ML56 System is determined by the ML56 trim dimensions. ML56 trims are available in 5" and 6" aperture (5" = 59xx series and 6" = 69xx series trims). Refer to Housing – Trim Section in this document.

**LED**
- 900 Series = 900 design lumens typical.
- Delivered lumens vary depending upon 5" or 6", color temperature, and trim finish.
- Color Temperature options: 2700K, 3000K, 3500K, 4000K
- CRI: 80
- L70 at 50,000 hours, projected in accordance with IES TM-21
- LED is a chip on board design consisting of a multiple LED package to create one virtual light source for a productive "cone of light"

**Color Specification & Quality Standards**
- A tight chromaticity specification ensures LED color uniformity, sustainable Color Rendering Index (CRI) and Correlated Color Temperature (CCT) over the useful life of the LED
- LED color uniformity of 3 SDCM exceeds ENERGY STAR® color standards per ANSI C78.377- 2008.
- Every Halo LED Light Module is quality tested and performance measured, and then serialized in a permanent record to register lumens, wattage, CRI and CCT.
- Halo LED serialized testing and measurement process ensures color and lumen consistency on a per-unit basis, and validates long-term product consistency over time
- Halo ML56 LED Light Modules include lumen, CRI, and CCT designations in the model number
- Example: **ML5609830**
  **56** = 5" / 6" aperture series
  **09** = 900 lumen series
  **8** = >80 CRI
  **30** = 3000K nominal CCT

**Electrical Power Connections**
- LED connector is a non-screw base luminaire disconnect offering easy installation with the matching Halo 5" H550 series and 6" H750 and H2750 series housings (housing selected depends upon LED trim 5" or 6").
- LED Connector is a non-screw base, and where required to qualify as a high-efficacy luminaire.
- The included E26 medium screw-base Edison adapter provides easy retrofit of incandescent housings (see Housing Section).

**Ground Connection**

Separate grounding cable included on the module for attachment to the housing during installation.

**LED Driver**
- Driver is universal voltage 120V-277V, and may be controlled from a switch in this range of main inputs (switchable at 120V, 220V, 230V, 240V, and 277V)
- Driver is dimmable at 120V operation when connected to a compatible dimmer.
- Driver is a high efficiency, electronic power supply providing DC power to the LED.
- Driver meets FCC EMI/RFI Consumer Level limits on 120V main inputs, and is compliant for use in residential and commercial installations.
- Driver features high power factor, low THD, and has integral thermal protection in the event of over temperature or internal failure.
- Driver is replaceable, if replacement should be required.

**Dimming**

Designed for dimming capability to nominal 5% in normal operation with standard 120V Leading Edge (LE) and Trailing Edge (TE) phase control dimmers. (Consult dimmer manufacturer for dimmer compatibility and details. Note, some dimmers require a neutral in the wallbox.)

**Warranty**

Cooper Lighting provides a (5) five year limited warranty on the Halo ML56 LED Light Module.

**LED Module in New or Retrofit Existing Construction – Housings other than Halo or All-Pro**
- If used in recessed housings other than Halo or All-Pro the Cooper Lighting 5-year limited warranty applies to the LED Light Module and Trim only.
- As with any electrical installation, a qualified electrician must ensure compatibility of use with a particular housing; this includes all applicable national and local electrical and building codes. Installer is responsible to properly and securely retain the LED Module and LED Trim in the housing at time of installation.

# ML56 LED System

## 900 Series / 80 CRI

**ML5609827**
**ML5609830**
**ML5609835**
**ML5609840**

**5-Inch and 6-Inch 900 Lumen LED Light Module for New Construction, Remodel and Retrofit**

**For use with 59x and 69x Series Trims**

**FOR USE IN INSULATED CEILING AND NON-INSULATED CEILING RATED HOUSINGS**

**HIGH EFFICACY LED WITH INTEGRAL DRIVER - DIMMABLE**

| Energy Data |
|---|
| **ML56 900/80 Series** |
| (Values at non-dimming line voltage) |
| Minimum Starting Temp: -30°C (-22°F) |
| EMI/RFI: FCC Title 47 CFR, Part 15, (Consumer) |
| Sound Rating: Class A |
| Input Voltage: UNV 120V-277V |
| Power Factor: >0.95 @ 120V and >0.9 @277V |
| Input Frequency: 50/60Hz |
| THD: <20% |
| Max. Rated Wattage: 14W |
| Input Power: 13.4W |
| Input Current at 120V: 0.15A |
| Input Current at 277V: 0.08A |
| Driver Compliance: UL8750, Class II rated |
| Maximum IC (Insulated Ceiling) Ambient Continuous Operating Temperature: 25°C (77°F) |
| Maximum Non-IC Ambient Continuous Operating Temperature: 40°C (104°F) |

**ML5609827**
5" or 6" LED 900 Series

**ML5609830**
5" or 6" LED 900 Series

**ML5609835**
5" or 6" LED 900 Series

**ML5609840**
5" or 6" LED 900 Series

## Compliance

- cULus listed 1598 Luminaire (Halo and All-Pro housings)
- UL Classified when used in retrofit (refer to housing section)
- cULus listed for damp locations
- cULus Wet location listed with baffle and reflector trims only
- Airtight certified per ASTM E283 (not exceeding 2.0 CFM under 57 Pascals pressure difference)
- IP66 ingress protection rated with baffle and reflector trims only
- RoHS compliant
- May be used in IC (insulated ceiling) housings in direct contact with insulation* and combustible material
- Can be used as a California Title 24 compliant Non-Residential LED Luminaire
- Can be used for International Energy Conservation Code (IECC) high efficiency luminaire compliance.
- Can be used for Washington State Energy Code compliance
- ENERGY STAR® certified luminaire - consult ENERGY STAR® Certified product list
- EMI/RFI per FCC 47CFR Part 15 Class B Consumer limits (commercial and residential compliant)
- Photometric testing in accordance with IES LM-79
- Lumen maintenance projections in accordance with IES LM-80 and TM-21
- CE Mark - "Conformité Européene" conformity with the Council of European Communities Directives, meeting internationally recognized compliance when used with Halo H550, H750, and H2750 Series LED housings only

* Not for use with housings in direct contact with spray foam insulation.

Refer to ENERGY STAR® Certified Products List.
Can be used to comply with California Title 24 Non-Residential Lighting Controls requirements as a LED Luminaire

## Dimensions

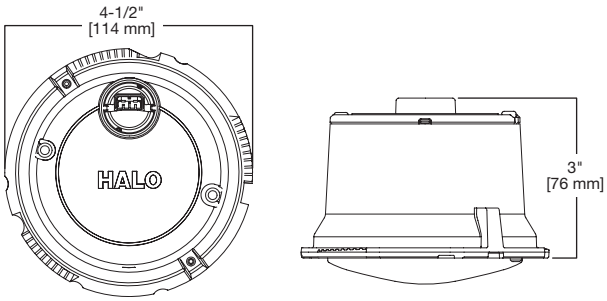

## Ordering Information

Sample Number: **ML5609830 593WB**
Order LED Module and trim separately.
A complete system also includes a compatible housing (new construction, remodel, or existing retrofit). Housing aperture size in the ML56 System is determined by the ML56 trim dimensions. ML56 trims are available in 5" and 6" aperture (5" = 59xx series and 6" = 69xx series trims). Refer to Housing Section in this document.

### ML56 LED Light Modules 900 Series / 80 CRI

**ML5609827**= 5"/6" LED light module, 900 lumen, 80CRI, 2700K
**ML5609830**= 5"/6" LED light module, 900 lumen, 80CRI, 3000K
**ML5609835**= 5"/6" LED light module, 900 lumen, 80CRI, 3500K
**ML5609840**= 5"/6" LED light module, 900 lumen, 80CRI, 4000K

### ML56 LED 5" and 6" Trims

**590 Series - 5" LED Trims**

**591WB**=5" LED trim, polymer "dead-front", shallow white baffle & flange – shallow and standard housings (For use with 600 Series LED light modules only)
**592SC**=5" LED trim, specular reflector & white flange
**592H**=5" LED trim, haze reflector & white flange
**592W**=5" LED trim, white reflector & flange
**593WB**=5" LED trim, white micro-step baffle & flange
**593BB**=5" LED trim, black micro-step baffle & white flange
**593SNB**=5" LED trim, satin nickel micro-step baffle & flange
**593TBZB**=5" LED trim, tuscan bronze micro-step baffle & flange
**594WB**=5" LED directional trim, white eyeball, baffle & flange – shallow and standard housings
**594SNB**=5" LED directional trim, satin nickel eyeball, baffle & flange – shallow and standard housings
**594TBZB**=5" LED directional trim, tuscan bronze eyeball, baffle & flange – shallow and standard housings
**595WW**=5" LED trim, wall wash - specular reflector, repositionable specular kick reflector, white flange
**596WB**=5" LED trim, white shallow baffle & flange – shallow and standard housings

**690 Series - 6" LED Trims**

**691WB**=6" LED trim, polymer "dead-front", white shallow baffle & flange – shallow and standard housings (For use with 600 Series LED light modules only)
**692SC**=6" LED trim, specular reflector & white flange
**692H**=6" LED trim, haze reflector & white flange
**692W**=6" LED trim, white reflector & flange
**693WB**=6" LED trim, white micro-step baffle & flange
**693BB**=6" LED trim, black micro-step baffle & white flange
**693SNB**=6" LED trim, satin nickel micro-step baffle & flange
**693TBZB**=6" LED trim, tuscan bronze micro-step baffle & flange
**694WB**=6" LED directional trim, white eyeball, baffle & flange – shallow and standard housings
**694SNB**=6" LED directional trim, satin nickel eyeball, baffle & flange – shallow and standard housings
**694TBZB**=6" LED directional trim, tuscan bronze eyeball, baffle & flange – shallow and standard housings
**695WW**=6" LED trim, wall wash - specular reflector, repositionable specular kick reflector, white flange
**696WB**=6" LED trim, white shallow baffle & flange – for use with shallow and standard housings

### ML56 System Accessories

**ML56CLIP**=Friction clip mounting kit - for retrofitting non-torsion spring housings, 6" clips*
**WW595SC**=5" Wall wash insert - kick reflector for 595WW (1-included with trim) double or corner wall wash**
**WW695SC**=6" Wall wash insert - kick reflector for 695WW (1-included with trim) double or corner wall wash**
**TRM590WH**=5" LED oversize trim ring for use with 59* series trims, white 6.3" I.D., 7.5" O.D. Ring slips over LED trim. Inset design allows 5" trim to fit into oversize ring for an even trim surface
**TRM690WH**=6" LED oversize trim ring for use with 69* series trims, white 6.9" I.D., 9.5" O.D. Ring slips over LED trim. Inset design allows 6" trim to fit into oversize ring for an even trim surface

*ML56CLIP is compatible with 6" baffle and reflector trims only (691, 692, 693, 695, 696 series).
For eyeball trim (694 series) use ML7RAB retrofit adpater band.

**Wall Wash Trims 595WW and 695WW Feature an exclusive Repositionable Kick Reflector for fine-tuning adjustment of the wall wash effect. The WW595SC and WW695SC are Repositionable Kick Reflectors sold separately for addition to the Wall Wash Trim when a double or corner wall wash is needed, or for replacement of original kick reflector included with the trim.

## Lighting Facts

**ML5609827**

| PRODUCT SPECIFICATIONS | |
|---|---|
| Lumens (Light Output) | 934 |
| Watts | 13.4 |
| Lumens Per Watt (Efficacy) | 69.7 |
| Color Accuracy (CRI) | 81 |
| Light Color (CCT) | 2700K |
| Correlated Color Temperature (CCT) | |

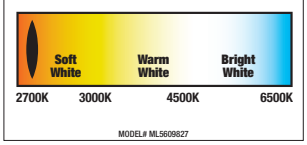


**ML5609830**

| PRODUCT SPECIFICATIONS | |
|---|---|
| Lumens (Light Output) | 1009 |
| Watts | 13.4 |
| Lumens Per Watt (Efficacy) | 75.3 |
| Color Accuracy (CRI) | 82 |
| Light Color (CCT) | 3000K |
| Correlated Color Temperature (CCT) | |

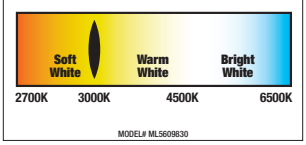


**ML5609835**

| PRODUCT SPECIFICATIONS | |
|---|---|
| Lumens (Light Output) | 1024 |
| Watts | 13.4 |
| Lumens Per Watt (Efficacy) | 76.4 |
| Color Accuracy (CRI) | 83 |
| Light Color (CCT) | 3500K |
| Correlated Color Temperature (CCT) | |

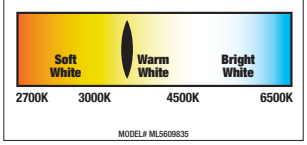


**ML5609840**

| PRODUCT SPECIFICATIONS | |
|---|---|
| Lumens (Light Output) | 1045 |
| Watts | 13.4 |
| Lumens Per Watt (Efficacy) | 78.0 |
| Color Accuracy (CRI) | 82 |
| Light Color (CCT) | 4000K |
| Correlated Color Temperature (CCT) | |

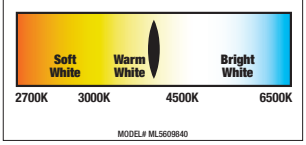

## Housing – Trim Compatibility

Housing aperture size in the ML56 System is determined by the ML56 trim dimensions. ML56 trims are available in 5" and 6" aperture (5" = 59xx series and 6" = 69xx series trims). Refer to ML56 TRIMS in this document. (Note "X" in the trim model number denotes finish code.)

## Housing – Compatibility

The ML56 LED light module - trim combination is cULus Listed or UL Classified for use with any 5" or 6" diameter recessed housing constructed of steel or aluminum with an internal volume that exceeds 115 $in^3$ in addition to those noted below.

## Halo and All-Pro UL Listed Compatibility

**6" Trims: 691X, 692X, 693X, 694X, 695X, 696X**
(Note shallow housings for use with 691X, 694X, 696X trims only)

### HALO - LED Housings with LED Luminaire Connector - High-Efficacy Compliant

| Brand | Housing Type | Catalog Number | Description |
|---|---|---|---|
| **Halo** | **Standard Housings** | H750ICAT | 6" LED, Insulated Ceiling, Air-Tite, New Construction Housing |
| | | H750RICAT | 6" LED, Insulated Ceiling, Air-Tite, Remodel Housing |
| | | H750T | 6" LED, Non-IC, Air-Tite, New Construction Housing |
| | | H750TCP | 6" LED, Non-IC, New Construction/Remodel Chicago Plenum Housing |
| | | H750TD010 | 6" LED, Non-IC, Air-Tite, New Construction Housing |
| | | H750RTD010 | 6" LED, Non-IC, Air-Tite, Remodel Housing |
| | | H750TCPD010 | 6" LED, Non-IC, New Construction/Remodel Chicago Plenum Housing |
| | | H750RINTD010 | 6" LED, Non-IC, Air-Tite, Remodel Housing (International CE Mark and UL/cUL Listed) |
| **Halo** | **Shallow Housings** | H2750ICAT | 6" LED, Shallow, Insulated Ceiling, Air-Tite, New Constr. (use with 691X, 694X, 696X trims only) |

### HALO and All-Pro - Incandescent E26 Screwbase Housings

| Brand | Housing Type | Catalog Number | Description |
|---|---|---|---|
| **Halo** | **Standard Housings** | H7ICAT | 6" Insulated Ceiling, Air-Tite New Construction Housing |
| | | H7RICAT | 6" Insulated Ceiling, Air-Tite Remodel Housing |
| | | H7ICT | 6" Insulated Ceiling, New Construction Housing |
| | | H7RICT | 6" Insulated Ceiling, Remodel Housing |
| | | H7ICATNB | 6" Insulated Ceiling, Air-Tite New Construction Housing, No Socket Bracket |
| | | H7ICTNB | 6" Insulated Ceiling, New Construction Housing, No Socket Bracket |
| | | H7T | 6" Non-IC, New Construction Housing |
| | | H7RT | 6" Non-IC, Remodel Housing |
| | | H7TNB | 6" Non-IC, New Construction Housing, No Socket Bracket |
| | | H7TCP | 6" Non-IC, Chicago Plenum, New Construction/Remodel Housing |
| | | H7UICT | 6" Insulated Ceiling, Universal New Construction Housing |
| | | H7UICAT | 6" Insulated Ceiling, Universal, Air-Tite, New Construction Housing |
| **All-Pro** | **Standard Housings** | EI700AT | 6" Insulated Ceiling, Air-Tite New Construction Housing |
| | | EI700RAT | 6" Insulated Ceiling, Air-Tite Remodel Housing |
| | | EI700 | 6" Insulated Ceiling, New Construction Housing |
| | | EI700R | 6" Insulated Ceiling, Remodel Housing |
| | | EI700ATNB | 6" Insulated Ceiling, Air-Tite New Construction Housing, No Socket Bracket |
| | | EI700NB | 6" Insulated Ceiling, New Construction Housing, No Socket Bracket |
| | | EI700U | 6" Insulated Ceiling, Universal New Construction Housing |
| | | EI700UAT | 6" Insulated Ceiling, Universal, Air-Tite, New Construction Housing |
| | | ET700 | 6" Non-IC, New Construction Housing |
| | | ET700R | 6" Non-IC, Remodel Housing |
| **Halo** | **Shallow Housings** | H27ICAT | 6" Shallow, Insulated Ceiling, Air-Tite New Construction (use with 691X, 694X, 696X trims only) |
| | | H27RICAT | 6" Shallow, Insulated Ceiling, Air-Tite Remodel Housing (use with 691X, 694X, 696X trims only) |
| | | H27ICT | 6" Shallow, Insulated Ceiling, New Construction Housing (use with 691X, 694X, 696X trims only) |
| | | H27RICT | 6" Shallow, Insulated Ceiling, Remodel Housing (use with 691X, 694X, 696X trims only) |
| | | H27T | 6" Shallow, Non-IC, New Construction Housing (use with 691X, 694X, 696X trims only) |
| | | H27RT | 6" Shallow, Non-IC, Remodel Housing (use with 691X, 694X, 696X trims only) |
| **All-Pro** | **Shallow Housings** | EI2700AT | 6" Shallow, Insulated Ceiling, Air-Tite New Construction (use with 691X, 694X, 696X trims only) |
| | | EI2700 | 6" Shallow, Insulated Ceiling, New Construction Housing (use with 691X, 694X, 696X trims only) |
| | | EI2700R | 6" Shallow, Insulated Ceiling, Air-Tite Remodel Housing (use with 691X, 694X, 696X trims only) |
| | | ET2700 | 6" Shallow, Non-IC, New Construction Housing (use with 691X, 694X, 696X trims only) |
| | | ET2700R | 6" Shallow, Non-IC, Remodel Housing (use with 691X, 694X, 696X trims only) |

## Halo LED Retrofit Enclosures

| Brand | Type | Catalog Number | Description |
|---|---|---|---|
| **Halo** | **Retrofit** | ML7BXRFK | 6" Retrofit Enclosure, Non-IC, BX Whip |
| | | ML7E26RFK | 6" Retrofit Enclosure, Non-IC, E26 Screw base Interface |

## Housing Compatibility - Continued

**5" Trims: 591X, 592X, 593X, 594X, 595X, 596X**
(Note shallow housings for use with 591X, 594X, 596X trims only)

### HALO - LED Housings with LED Luminaire Connector - High-Efficacy Compliant

| Brand | Housing Type | Catalog Number | Description |
|---|---|---|---|
| **Halo** | **Standard Housings** | H550ICAT | 5" LED, Insulated Ceiling, Air-Tite, New Construction Housing |
| | | H550RICAT | 5" LED, Insulated Ceiling, Air-Tite, Remodel Housing |

### HALO and All-Pro - Incandescent E26 Screwbase Housings

| Brand | Housing Type | Catalog Number | Description |
|---|---|---|---|
| **Halo** | **Standard Housings** | H5ICAT | 5" Insulated Ceiling, Air-Tite New Construction Housing |
| | | H5RICAT | 5" Insulated Ceiling, Air-Tite Remodel Housing |
| | | H5T | 5" Non-IC, New Construction Housing |
| | | H5RT | 5" Non-IC, Remodel Housing |
| | | H5TM | 5" Non-IC, New Construction Housing (Canada) |
| **All-Pro** | **Standard Housings** | EI500AT | 5" Insulated Ceiling, Air-Tite New Construction Housing |
| | | EI500RAT | 5" Insulated Ceiling, Air-Tite Remodel Housing |
| | | ET500 | 5" Non-IC, New Construction Housing |
| | | ET500R | 5" Non-IC, Remodel Housing |
| **Halo** | **Shallow Housings** | H25ICAT | 5" Shallow, Insulated Ceiling, Air-Tite New Construction (use with 591X, 594X, 596X trims only) |

### Housings - UL Classified for Retrofit Compatibility

**6" Trims: 691X, 692X, 693X, 694X, 695X, 696X**
(Note shallow housings for use with 691X, 694X, 696X trims only)

| Brand | Housing Type | Description |
|---|---|---|
| **Juno** | **Standard Housings** | IC22, IC22R, IC22W, IC22S, IC23, IC23W, TC2, TC2R, IC2 |
| | **Shallow Housings** | IC21, IC21R (use with 691X, 694X, 696X trims only) |
| **Capri** | **Standard Housings** | CR1, PR1, QL1 |
| | **Shallow Housings** | R9ASIC/PS9RM (use with 691X, 694X, 696X trims only) |
| **Elco** | | HL7ICA (EL7ICA) |
| **Lithonia** | **Standard Housings** | LC6, L7X |
| | **Shallow Housings** | L7XP (use with 691X, 694X, 696X trims only) |
| **Thomas** | | PS1 |
| **Commercial Electric** | | C7ICA, H3 |
| **Progress** | **Standard Housing** | P87-AT †* |
| | **Shallow Housing** | P86TG (use with 691X, 694X, 696X trims only) |
| **Lightolier** | | 1104ICS †*, 1104ICR †* |

† Requires replacement of torsion springs with Friction Clips. Order Friction Clip Kit separately: ML56CLIP
* ML56CLIP is compatible with only baffle and reflector trims

**5" Trims: 591X, 596X**

| Brand | Housing Type | Catalog Number |
|---|---|---|
| **Juno** | **Standard Housings** | IC20, IC25S, IC25W, TC20 |

**ALR-04**
Revision Date:

## ML56 900 Series Compliance Table

**80 CRI LED Modules with ML56 Trims**

| | ML5609827 | ML5609830 | ML5609835 | ML5609840 |
|---|---|---|---|---|
| **593BB** | WSEC, IECC | ES, T24NR, WSEC, IECC | ES, T24NR, WSEC, IECC | ES, T24NR, WSEC, IECC |
| **693BB** | ES, T24NR, WSEC, IECC | ES, T24NR, WSEC, IECC | ES, T24NR, WSEC, IECC | ES, T24NR, WSEC, IECC |
| **593TBZB** | ES, T24NR, WSEC, IECC | ES, T24NR, WSEC, IECC | ES, T24NR, WSEC, IECC | ES, T24NR, WSEC, IECC |
| **693TBZB** | ES, T24NR, WSEC, IECC | ES, T24NR, WSEC, IECC | ES, T24NR, WSEC, IECC | ES, T24NR, WSEC, IECC |
| **593SNB** | ES, T24NR, WSEC, IECC | ES, T24NR, WSEC, IECC | ES, T24NR, WSEC, IECC | ES, T24NR, WSEC, IECC |
| **693SNB** | ES, T24NR, WSEC, IECC | ES, T24NR, WSEC, IECC | ES, T24NR, WSEC, IECC | ES, T24NR, WSEC, IECC |
| **592H** | ES, T24NR, WSEC, IECC | ES, T24NR, WSEC, IECC | ES, T24NR, WSEC, IECC | ES, T24NR, WSEC, IECC |
| **593WB** | ES, T24NR, WSEC, IECC | ES, T24NR, WSEC, IECC | ES, T24NR, WSEC, IECC | ES, T24NR, WSEC, IECC |
| **592W** | ES, T24NR, WSEC, IECC | ES, T24NR, WSEC, IECC | ES, T24NR, WSEC, IECC | ES, T24NR, WSEC, IECC |
| **595WW** | ES, T24NR, WSEC, IECC | ES, T24NR, WSEC, IECC | ES, T24NR, WSEC, IECC | ES, T24NR, WSEC, IECC |
| **592SC** | ES, T24NR, WSEC, IECC | ES, T24NR, WSEC, IECC | ES, T24NR, WSEC, IECC | ES, T24NR, WSEC, IECC |
| **692H** | ES, T24NR, WSEC, IECC | ES, T24NR, WSEC, IECC | ES, T24NR, WSEC, IECC | ES, T24NR, WSEC, IECC |
| **695WW** | ES, T24NR, WSEC, IECC | ES, T24NR, WSEC, IECC | ES, T24NR, WSEC, IECC | ES, T24NR, WSEC, IECC |
| **693WB** | ES, T24NR, WSEC, IECC | ES, T24NR, WSEC, IECC | ES, T24NR, WSEC, IECC | ES, T24NR, WSEC, IECC |
| **692SC** | ES, T24NR, WSEC, IECC | ES, T24NR, WSEC, IECC | ES, T24NR, WSEC, IECC | ES, T24NR, WSEC, IECC |
| **596WB** | ES, T24NR, WSEC, IECC | ES, T24NR, WSEC, IECC | ES, T24NR, WSEC, IECC | ES, T24NR, WSEC, IECC |
| **692W** | ES, T24NR, WSEC, IECC | ES, T24NR, WSEC, IECC | ES, T24NR, WSEC, IECC | ES, T24NR, WSEC, IECC |
| **594TBZB** | ES, T24NR, WSEC, IECC | ES, T24NR, WSEC, IECC | ES, T24NR, WSEC, IECC | ES, T24NR, WSEC, IECC |
| **694TBZB** | ES, T24NR, WSEC, IECC | ES, T24NR, WSEC, IECC | ES, T24NR, WSEC, IECC | ES, T24NR, WSEC, IECC |
| **594SNB** | ES, T24NR, WSEC, IECC | ES, T24NR, WSEC, IECC | ES, T24NR, WSEC, IECC | ES, T24NR, WSEC, IECC |
| **696WB** | ES, T24NR, WSEC, IECC | ES, T24NR, WSEC, IECC | ES, T24NR, WSEC, IECC | ES, T24NR, WSEC, IECC |
| **694SNB** | ES, T24NR, WSEC, IECC | ES, T24NR, WSEC, IECC | ES, T24NR, WSEC, IECC | ES, T24NR, WSEC, IECC |
| **694WB** | ES, T24NR, WSEC, IECC | ES, T24NR, WSEC, IECC | ES, T24NR, WSEC, IECC | ES, T24NR, WSEC, IECC |
| **594WB** | ES, T24NR, WSEC, IECC | ES, T24NR, WSEC, IECC | ES, T24NR, WSEC, IECC | ES, T24NR, WSEC, IECC |
| **594WB-30** | ES, T24NR, WSEC, IECC | ES, T24NR, WSEC, IECC | ES, T24NR, WSEC, IECC | ES, T24NR, WSEC, IECC |
| **694WB-30** | ES, T24NR, WSEC, IECC | ES, T24NR, WSEC, IECC | ES, T24NR, WSEC, IECC | ES, T24NR, WSEC, IECC |

## Code Descriptions:

**ES** = ENERGY STAR® Certified Luminaire

**T24NR** = May be used for California Title 24 Non-Residential LED luminaire

**IECC** = International Energy Conservation Code "High Efficacy"

**WSEC** = Washington State Energy Code - "High Efficacy" Luminaire

## ML56 900 Series Lumen Table

**80 CRI LED Modules with ML56 trims**

| | | ML5609827 | | ML5609830 | | ML5609835 | | ML5609840 | |
|---|---|---|---|---|---|---|---|---|---|
| | **Trim Catalog #** | **Lumens** | **LPW** | **Lumens** | **LPW** | **Lumens** | **LPW** | **Lumens** | **LPW** |
| **0° Tilt Angle** | 593BB | 602.9 | 45.0 | 651.3 | 48.6 | 661.0 | 49.3 | 674.5 | 50.3 |
| | 693BB | 676.2 | 50.5 | 730.5 | 54.5 | 741.3 | 55.3 | 756.5 | 56.5 |
| | 593TBZB | 686.3 | 51.2 | 741.4 | 55.3 | 752.4 | 56.2 | 767.8 | 57.3 |
| | 693TBZB | 714.1 | 53.3 | 771.4 | 57.6 | 782.9 | 58.4 | 799.0 | 59.6 |
| | 593SNB | 757.1 | 56.5 | 817.8 | 61.0 | 830.0 | 61.9 | 847.0 | 63.2 |
| | 693SNB | 789.9 | 58.9 | 853.3 | 63.7 | 866.0 | 64.6 | 883.8 | 66.0 |
| | 592H | 846.8 | 63.2 | 914.8 | 68.3 | 928.4 | 69.3 | 947.4 | 70.7 |
| | 593WB | 887.2 | 66.2 | 958.5 | 71.5 | 972.7 | 72.6 | 992.7 | 74.1 |
| | 592W | 894.8 | 66.8 | 966.7 | 72.1 | 981.0 | 73.2 | 1001.2 | 74.7 |
| | 595WW | 916.3 | 68.4 | 989.9 | 73.9 | 1004.6 | 75.0 | 1025.2 | 76.5 |
| | 592SC | 917.6 | 68.5 | 991.3 | 74.0 | 1006.0 | 75.1 | 1026.6 | 76.6 |
| | 692H | 921.4 | 68.8 | 995.3 | 74.3 | 1010.1 | 75.4 | 1030.9 | 76.9 |
| | 695WW | 922.6 | 68.9 | 996.7 | 74.4 | 1011.5 | 75.5 | 1032.3 | 77.0 |
| | 693WB | 934.0 | 69.7 | 1009.0 | 75.3 | 1024.0 | 76.4 | 1045.0 | 78.0 |
| | 692SC | 946.6 | 70.6 | 1022.7 | 76.3 | 1037.9 | 77.5 | 1059.1 | 79.0 |
| | 596WB | 946.6 | 70.6 | 1022.7 | 76.3 | 1037.9 | 77.5 | 1059.1 | 79.0 |
| | 692W | 947.9 | 70.7 | 1024.0 | 76.4 | 1039.2 | 77.6 | 1060.6 | 79.1 |
| | 594TBZB | 954.2 | 71.2 | 1030.8 | 76.9 | 1046.2 | 78.1 | 1067.6 | 79.7 |
| | 694TBZB | 959.3 | 71.6 | 1036.3 | 77.3 | 1051.7 | 78.5 | 1073.3 | 80.1 |
| | 594SNB | 959.3 | 71.6 | 1036.3 | 77.3 | 1051.7 | 78.5 | 1073.3 | 80.1 |
| | 696WB | 975.7 | 72.8 | 1054.1 | 78.7 | 1069.7 | 79.8 | 1091.7 | 81.5 |
| | 694SNB | 977.0 | 72.9 | 1055.4 | 78.8 | 1071.1 | 79.9 | 1093.1 | 81.6 |
| | 694WB | 1017.4 | 75.9 | 1099.1 | 82.0 | 1115.5 | 83.2 | 1138.3 | 84.9 |
| | 594WB | 1018.7 | 76.0 | 1100.5 | 82.1 | 1116.8 | 83.3 | 1139.7 | 85.1 |
| **30° Tilt Angle** | 594WB-30 | 987.1 | 73.7 | 1066.3 | 79.6 | 1082.2 | 80.8 | 1104.4 | 82.4 |
| | 694WB-30 | 959.3 | 71.6 | 1036.3 | 77.3 | 1051.7 | 78.5 | 1073.3 | 80.1 |

Photometric tests are per IES measurement standards. Tests represent typical fixture performance. Field results may vary.

## Photometry 5" Trims • 900 Series • 80 CRI

### Multiplier Table

| CCT Option | 2700 K | 3000 K | 3500 K | 4000 K |
|---|---|---|---|---|
| CCT Multiplier | 0.93 | 1.00 | 1.02 | 1.04 |

Table based upon testing with 3000°K color temperature, 80CRI.
Multipliers may be used to determine relative lumen values with other color temperatures.

## 5" Trims • 900 Series • 80 CRI

### ML5609830-592SC

| | |
|---|---|
| Test Number | P130004 |
| Light Module | 900 Series, 80CRI |
| Trim | 5" Aperture, Specular Clear Trim |
| Lumens | 991 |
| Efficacy | 74 Lm/W |
| SC | 1.06 |

### Cone of Light

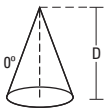


| D | FC | L | W |
|---|---|---|---|
| 5.5 | 23.9 | 5.8 | 5.8 |
| 7 | 14.7 | 7.2 | 7.2 |
| 8 | 11.3 | 8.4 | 8.4 |
| 9 | 8.9 | 9.4 | 9.4 |
| 10 | 7.2 | 10.4 | 10.4 |
| 12 | 5 | 12.6 | 12.6 |

### Candlepower Distribution

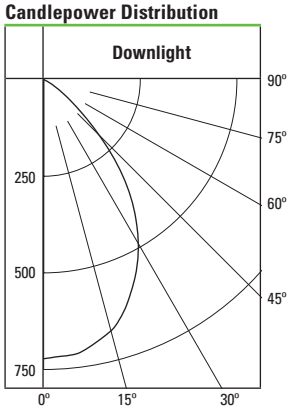


### Zonal Lumen Summary

| Zone | Lumens | %Fixture |
|---|---|---|
| 0-30 | 513 | 51.8 |
| 0-40 | 765 | 77.2 |
| 0-60 | 979 | 98.8 |
| 0-90 | 991 | 100 |
| 90-180 | 0 | 0 |
| 0-180 | 991 | 100 |

### ML5609830-594WB

| | |
|---|---|
| Test Number | P130060 |
| Light Module | 900 Series, 80CRI |
| Trim | 5" Aperture, Directional Eyeball |
| Lumens | 1100 |
| Efficacy | 82.1 Lm/W |
| SC | 1.22 |

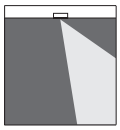

### Candlepower Distribution

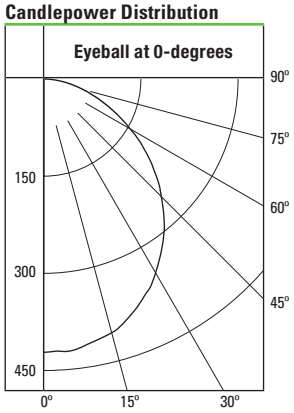


### Zonal Lumen Summary

| Zone | Lumens | %Fixture |
|---|---|---|
| 0-30 | 324 | 29.5 |
| 0-40 | 523 | 47.6 |
| 0-60 | 892 | 81 |
| 0-90 | 1100 | 100 |
| 90-180 | 0 | 0 |
| 0-180 | 1100 | 100 |

### 30° Horizontal Plane

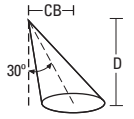


| D | FC | L | W | CB |
|---|---|---|---|---|
| 5.5 | 12.3 | 6.6 | 6.6 | 3.2 |
| 7 | 7.6 | 8.3 | 8.6 | 4 |
| 8 | 5.8 | 9.6 | 9.8 | 4.6 |
| 9 | 4.6 | 10.7 | 11 | 5.2 |
| 10 | 3.7 | 11.9 | 12.2 | 5.8 |
| 12 | 2.6 | 14.3 | 14.6 | 6.9 |

### 30° Vertical Plane

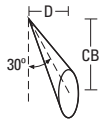


| D | FC | L | W | CB |
|---|---|---|---|---|
| 1' | 240.2 | 1.1 | 1.2 | 1.7 |
| 2' | 60.1 | 2.2 | 2.6 | 3.5 |
| 3' | 26.7 | 3.3 | 3.8 | 5.2 |
| 4' | 15 | 4.5 | 5.2 | 6.9 |
| 5' | 9.6 | 5.6 | 6.6 | 8.7 |
| 6' | 6.7 | 6.7 | 7.8 | 10.4 |

### Candlepower Distribution

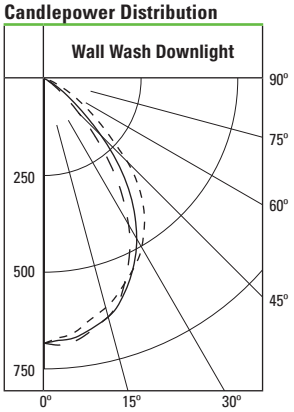


**Legend**

| | |
|---|---|
| 0-deg: | Wall |
| 90-deg: | Side |
| 180-deg: | Room |

### ML5609830-595WW

| | |
|---|---|
| Test Number | P130084 |
| Light Module | 900 Series, 80CRI |
| Trim | 5" Aperture, Wall Wash with Specular Clear Trim and Specular Clear Kick Reflector |
| Lumens | 990 |
| Efficacy | 73.9 Lm/W |
| SC | 1.06 |

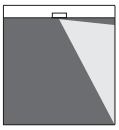

### Zonal Lumen Summary

| Zone | Lumens | %Fixture |
|---|---|---|
| 0-30 | 486 | 49.1 |
| 0-40 | 732 | 73.9 |
| 0-60 | 964 | 97.4 |
| 0-90 | 990 | 100 |
| 90-180 | 0 | 0 |
| 0-180 | 990 | 100 |

### Single Unit Footcandles

**2.5' From Wall** (Distance From Fixture Along Wall)

| DD | ● | 1' | 2' | 3' | 4' | 5' | 6' |
|---|---|---|---|---|---|---|---|
| 1' | 4 | 2.7 | 1 | 0.3 | 0.1 | 0 | 0 |
| 2' | 14.1 | 10.3 | 4.4 | 1.3 | 0.4 | 0.1 | 0 |
| 3' | 16.4 | 13.6 | 7.4 | 2.9 | 1.1 | 0.4 | 0.1 |
| 4' | 11.5 | 10.4 | 7.4 | 4 | 1.8 | 0.8 | 0.3 |
| 5' | 7.6 | 7.1 | 5.7 | 3.8 | 2.2 | 1.1 | 0.5 |
| 6' | 5.1 | 4.9 | 4.2 | 3.1 | 2.2 | 1.3 | 0.7 |
| 7' | 3.5 | 3.4 | 3 | 2.4 | 1.8 | 1.3 | 0.8 |
| 8' | 2.5 | 2.5 | 2.3 | 1.9 | 1.5 | 1.1 | 0.8 |
| 9' | 1.9 | 1.8 | 1.7 | 1.5 | 1.2 | 1 | 0.7 |
| 10' | 1.4 | 1.4 | 1.3 | 1.2 | 1 | 0.8 | 0.7 |

### Multiple Unit Footcandles

**2.5' From Wall** (Distance From Fixture Along Wall)

| DD | --3'-- | | | --4'-- | | |
|---|---|---|---|---|---|---|
| 1' | 4.3 | 3.3 | 4.3 | 4.1 | 1.9 | 4.1 |
| 2' | 15.4 | 14 | 15.4 | 14.5 | 8.8 | 14.5 |
| 3' | 19.3 | 20.9 | 19.3 | 17.5 | 14.7 | 17.5 |
| 4' | 15.5 | 17.7 | 15.5 | 13.3 | 14.8 | 13.3 |
| 5' | 11.4 | 12.7 | 11.4 | 9.9 | 11.4 | 9.9 |
| 6' | 8.2 | 9 | 8.2 | 7.3 | 8.3 | 7.3 |
| 7' | 6 | 6.4 | 6 | 5.4 | 6.1 | 5.4 |
| 8' | 4.4 | 4.7 | 4.4 | 4.1 | 4.5 | 4.1 |
| 9' | 3.3 | 3.5 | 3.3 | 3.1 | 3.4 | 3.1 |
| 10' | 2.6 | 2.7 | 2.6 | 2.4 | 2.6 | 2.4 |

Photometric tests are per IES measurement standards. Tests represent typical fixture performance. Field results may vary.

# Photometry 6" Trims • 900 Series • 80 CRI

## Multiplier Table

| CCT Option | 2700 K | 3000 K | 3500 K | 4000 K |
|---|---|---|---|---|
| CCT Multiplier | 0.93 | 1.00 | 1.02 | 1.04 |

Table based upon testing with 3000°K color temperature, 80CRI.
Multipliers may be used to determine relative lumen values with other color temperatures.

## ML5609830-692SC

| | |
|---|---|
| Test Number | P130100 |
| Light Module | 900 Series, 80CRI |
| Trim | 6" Aperture, Specular Clear Trim |
| Lumens | 1023 |
| Efficacy | 76.3 Lm/W |
| SC | 0.66 |

### Cone of Light

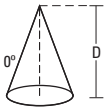


| D | FC | L | W |
|---|---|---|---|
| 5.5 | 39.4 | 3.6 | 3.6 |
| 7 | 24.4 | 4.6 | 4.6 |
| 8 | 18.6 | 5.2 | 5.2 |
| 9 | 14.7 | 5.8 | 5.8 |
| 10 | 11.9 | 6.6 | 6.6 |
| 12 | 8.3 | 7.8 | 7.8 |

### Candlepower Distribution

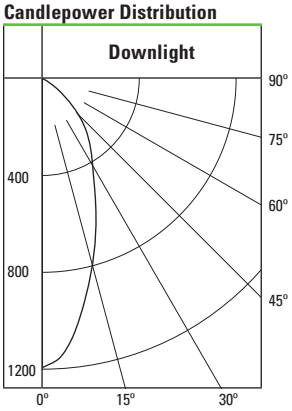


### Zonal Lumen Summary

| Zone | Lumens | %Fixture |
|---|---|---|
| 0-30 | 562 | 54.9 |
| 0-40 | 778 | 76.1 |
| 0-60 | 1009 | 98.7 |
| 0-90 | 1023 | 100 |
| 90-180 | 0 | 0 |
| 0-180 | 1023 | 100 |

## ML5609830-694WB

| | |
|---|---|
| Test Number | P130156 |
| Light Module | 900 Series, 80CRI |
| Trim | 6" Aperture, Directional Eyeball |
| Lumens | 1099 |
| Efficacy | 82 Lm/W |
| SC | 1.21 |

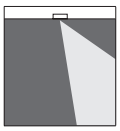

### Candlepower Distribution

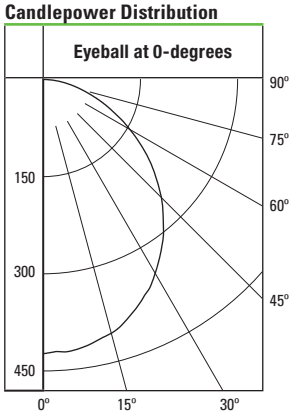


### Zonal Lumen Summary

| Zone | Lumens | %Fixture |
|---|---|---|
| 0-30 | 324 | 29.5 |
| 0-40 | 523 | 47.6 |
| 0-60 | 891 | 81.1 |
| 0-90 | 1099 | 100 |
| 90-180 | 0 | 0 |
| 0-180 | 1099 | 100 |

### 30° Horizontal Plane

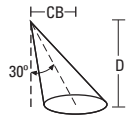


| D | FC | L | W | CB |
|---|---|---|---|---|
| 5.5 | 12.3 | 6.6 | 6.6 | 3.2 |
| 7 | 7.6 | 8.3 | 8.6 | 4 |
| 8 | 5.8 | 9.6 | 9.8 | 4.6 |
| 9 | 4.6 | 10.7 | 11 | 5.2 |
| 10 | 3.7 | 12 | 12.2 | 5.8 |
| 12 | 2.6 | 14.3 | 14.6 | 6.9 |

### 30° Vertical Plane

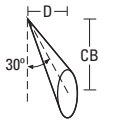


| D | FC | L | W | CB |
|---|---|---|---|---|
| 1' | 240.2 | 1.1 | 1.2 | 1.7 |
| 2' | 60.1 | 2.2 | 2.6 | 3.5 |
| 3' | 26.7 | 3.3 | 3.8 | 5.2 |
| 4' | 15 | 4.5 | 5.2 | 6.9 |
| 5' | 9.6 | 5.6 | 6.6 | 8.7 |
| 6' | 6.7 | 6.7 | 7.8 | 10.4 |

### Candlepower Distribution

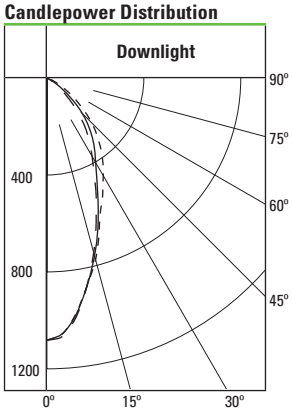


**Legend**

| | |
|---|---|
| 0-deg: — — — — — | Wall |
| 90-deg: ——— | Side |
| 180-deg: —— —— —— | Room |

## ML5609830-695WW

| | |
|---|---|
| Test Number | P130180 |
| Light Module | 900 Series, 80CRI |
| Trim | 6" Aperture, Wall Wash with Specular Clear Trim and Specular Clear Kick Reflector |
| Lumens | 997 |
| Efficacy | 74.4 Lm/W |
| SC | 0.69 |

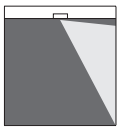

### Zonal Lumen Summary

| Zone | Lumens | %Fixture |
|---|---|---|
| 0-30 | 533 | 53.5 |
| 0-40 | 745 | 74.8 |
| 0-60 | 974 | 97.7 |
| 0-90 | 997 | 100 |
| 90-180 | 0 | 0 |
| 0-180 | 997 | 100 |

### Single Unit Footcandles

**2.5' From Wall** (Distance From Fixture Along Wall)

| DD | ● | 1' | 2' | 3' | 4' | 5' | 6' |
|---|---|---|---|---|---|---|---|
| 1' | 3 | 1.7 | 0.6 | 0.2 | 0.1 | 0 | 0 |
| 2' | 13 | 9.3 | 4 | 1.3 | 0.3 | 0.1 | 0 |
| 3' | 13.9 | 11.3 | 6.6 | 2.9 | 1.1 | 0.4 | 0.1 |
| 4' | 10.5 | 9 | 6.2 | 3.6 | 1.8 | 0.8 | 0.3 |
| 5' | 7.4 | 6.6 | 5 | 3.3 | 2 | 1.1 | 0.5 |
| 6' | 5.3 | 4.8 | 3.8 | 2.7 | 1.8 | 1.2 | 0.7 |
| 7' | 3.9 | 3.6 | 3 | 2.2 | 1.6 | 1.1 | 0.7 |
| 8' | 3 | 2.8 | 2.3 | 1.8 | 1.3 | 1 | 0.7 |
| 9' | 2.3 | 2.2 | 1.9 | 1.5 | 1.1 | 0.8 | 0.6 |
| 10' | 1.8 | 1.7 | 1.5 | 1.2 | 1 | 0.7 | 0.6 |

### Multiple Unit Footcandles

**2.5' From Wall** (Distance From Fixture Along Wall)

| DD | --3'-- | | | --4'-- | | |
|---|---|---|---|---|---|---|
| 1' | 3.2 | 2.2 | 3.2 | 3 | 1.2 | 3 |
| 2' | 14.3 | 13 | 14.3 | 13.4 | 8.1 | 13.4 |
| 3' | 16.9 | 18.2 | 16.9 | 15 | 13.2 | 15 |
| 4' | 14.1 | 15.5 | 14.1 | 12.2 | 12.5 | 12.2 |
| 5' | 10.7 | 11.7 | 10.7 | 9.4 | 9.9 | 9.4 |
| 6' | 8 | 8.8 | 8 | 7.1 | 7.7 | 7.1 |
| 7' | 6.2 | 6.7 | 6.2 | 5.5 | 5.9 | 5.5 |
| 8' | 4.8 | 5.2 | 4.8 | 4.4 | 4.6 | 4.4 |
| 9' | 3.8 | 4.1 | 3.8 | 3.5 | 3.7 | 3.5 |
| 10' | 3 | 3.3 | 3 | 2.8 | 3 | 2.8 |

Photometric tests are per IES measurement standards. Tests represent typical fixture performance. Field results may vary.

Cooper Lighting by EATON

**Eaton**
1000 Eaton Boulevard
Cleveland, OH 44122
United States
Eaton.com

**Eaton's Cooper Lighting Business**
1121 Highway 74 South
Peachtree City, GA 30269
P: 770-486-4800
www.cooperlighting.com

© 2015 Eaton
All Rights Reserved
Printed in USA
Publication No. ADV141692
March 2015

Specifications and dimensions subject to change without notice.

# Portfolio

## DESCRIPTION

4 inch LED recessed medium or wide beam wall wash specially designed for LED technology. Two-stage reflector system combined with gradient kicker, produces high levels of uniform vertical illumination on the wall with minimal source brightness. Lumen packages include 900, 1300, 1800 and 2800 lumens with color temperatures of 2700K, 3000K, 3500K, 4000K. Available with dim-to-warm technology – similar to halogen at full power, the 3000K LED warms smoothly as dimmed to 1850K creating a rich warm glow within the space.

| | | |
|---|---|---|
| **Catalog #** | LD4A096DE010-ERM4A9030HWF-HB26 | **Type** ALR-05 |
| **Project** | ALOFT | Revision Date: |
| **Comments** | | **Date** |
| **Prepared by** | Kathleen Kenny, National Accounts, 678-447-5208, kathleenkenny@eaton.com | |

## SPECIFICATION FEATURES

**Lower Wall Wash Reflector**
Lower Wall Wash Reflector Spun .050" thick aluminum lower reflector with gradient kicker in combination with a lensed upper optical chamber provides superior lumen output, high level vertical illumination with minimal source brightness. Available in all Portfolio Alzak® finishes.

**Trim Retention**
Lower reflector is retained with two torsion springs holding the flange tightly to the finished ceiling surface.

**Plaster Frame / Collar**
New Construction Housing: Die cast aluminum 1-1/2" deep collar accommodates ceiling materials up to 2".

**Universal Mounting Bracket**
Accepts 1/2" EMT, C channel and bar hangers and adjusts 5" vertically from above and below the ceiling.

**Junction Box**
(4) 1/2" and (2) 3/4" trade size pry outs positioned to allow straight conduit runs. Listed for (8) #12 AWG (four in, four out) 90°C conductors and feed thru branch wiring.

**Thermal**
Extruded aluminum heat sink conducts heat away from the LED module for optimal performance and long life.

**LED**
LED system contains a plurality of high brightness white LED's combined with a high reflectance upper reflector and convex transitional lens producing even distribution with no pixilation. Rated for 50,000 hours at 70% lumen maintenance. Auto resetting, thermally protected, LED's are turned off when safe operating temperatures are exceeded. Color variation within 3-step MacAdam ellipses. Flexible disconnect allows for tool-less replacement of LED engine from below ceiling. Available in 80 or 90 CRI.
D2W™ – dim-to-warm shifts CCT from 3000K to 1850K as fixture dims mimicking halogen sources.

**Driver**
Combination 120-277V 0-10V or 120V trailing edge phase cut driver provides flicker free dimming from 100% to 10%. Optional 1% 0-10V, Fifth Light, DMX or Lutron® Ecosystem. Driver can be serviced from above or through the aperture.

**Code Compliance**
Thermally protected and cULus listed for protected damp locations. Optional City of Chicago environmental air (CCEA) marking for plenum applications. EMI/RFI emissions per FCC 47CFR Part 18 Class B consumer limits. Non-IC rated - Insulation must be kept 3" from top and sides of housing. RoHS Compliant. Photometric testing completed in accordance with IES LM 79 standards. LED life testing completed in accordance with LM 80 standards.

**Warranty**
5-year warranty.

# LD4A09 LD4A13 LD4A18 LD4A28

**900, 1300 Lumen LED**

**1800, 2800 Lumen LED**

**4-Inch**

**Medium or Wide Beam Wall Wash**

**New Construction**

D2W™

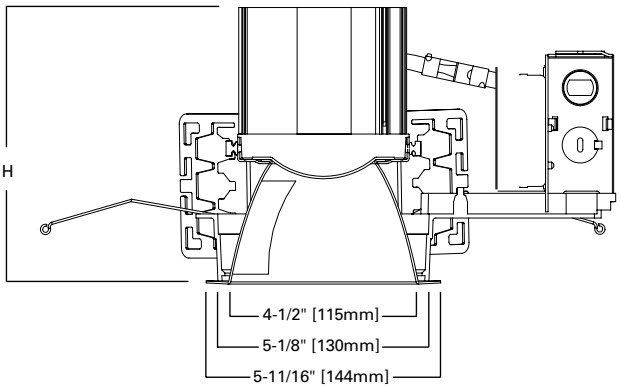


TOP VIEW - NEW CONSTRUCTION

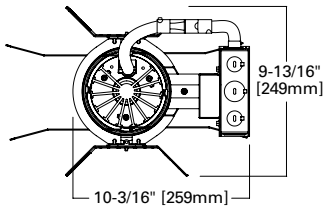


TOP VIEW - NEW CONSTRUCTION WITH BATTERY

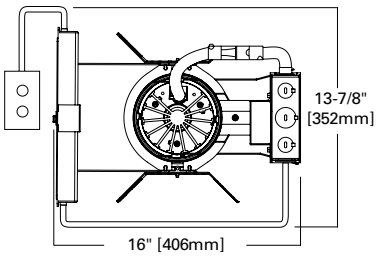


| Distribution | Lumens | Height |
|---|---|---|
| Wide Beam Wall Wash | 900/1300 | 5-3/16" |
| Medium Beam Wall Wash | 900/1300 | 5-11/16" |
| Wide Beam Wall Wash | 1800/2800 | 7-3/16" |
| Medium Beam Wall Wash | 1800/2800 | 7-11/16" |

Refer to ENERGY STAR® Qualified Products List.

powered by fifthlight technology

Powering Business Worldwide

## ORDERING INFORMATION

**EXAMPLE: LD4A13D010TE ERW4A13835 4LM111LI**=4" LED Medium Beam Wall Wash, 1300 Lumen, 3,500 K Color with Universal 120 - 277V, 0 -

### Housing

**LD4A**=4" Aperture
**LD4ACP**=4" Aperture, Chicago Plenum

### Lumens[1]

**09**=900 Lumens
**13**=1300 Lumens
**18**=1800 Lumens
**28**=2800 Lumens

### Driver

**900, 1300, 1800 and 2800 Lumen**
**D010TE**=120-277V 0-10V 10% Dimming or Trailing Edge 120V Dimming
**D5LT**=Fifth Light® (DALI) 0% Dimming
**DE010**=0 to 100% Dimming, 120-277V 50/60Hz, 0-10V
**DL3**=1 to 100% Dimming, 120-277V Lutron® Hi-Lume, Ecosystem or 3 Wire
**DLT**=Hi-Lume Forward Phase 2-wire Dimming 120V
**DMX**=DMX 0% Dimming

**900, 1300 and 1800 Lumen**
**D010TR**=120-277V 0-10V 10% Dimming or Leading Edge 120V Dimming

### Options[2]

**EMBOD**=7W Bodine® Emergency Module with Remote Test Switch
**EM7**=7W Emergency Module with Remote Test Switch [3]
**EM14**=14W Emergency Module with Remote Test Switch [3]

### Power Module

**ERM4A**=4" Module for Medium Beam Reflector
**ERW4A**=4" Module for Wide Beam Reflector

### Lumens

**09**=900 Lumen
**13**=1300 Lumen
**18**=1800 Lumen
**28**=2800 Lumen

### CRI

**8**=80 CRI
**9**=90 CRI

### Color

**27**=2700° K
**30**=3000° K
**35**=3500° K
**40**=4000° K
**27CP**=2700° K, Chicago Plenum
**30CP**=3000° K, Chicago plenum
**35CP**=3500° K, Chicago Plenum
**40CP**=4000° K, Chiago Plenum
**30D2W**= Dim to warm 3000° K to 1850° K (2000 lumen and below, 90 CRI)

### Reflector

**4LM111**=4" Medium Reflector, Single Wall Wash, Self-flanged
**4LM121**=4" Medium Reflector, Double Wall Wash, Self-flanged
**4LM110**=4" Medium Reflector, Single Wall Wash, Polymer Trim Ring
**4LM120**=4" Medium Reflector, Double Wall Wash, Polymer Trim Ring

**4LW111**=4" Wide Reflector, Single Wall Wash, Self-flanged
**4LW121**=4" Wide Reflector, Double Wall Wash, Self-flanged
**4LW110**=4" Wide Reflector, Single Wall Wash, Polymer Trim Ring
**4LW120**=4" Wide Reflector, Double Wall Wash, Polymer Trim Ring

### Finish

**LI**=Specular Clear
**H**=Semi-Specular Clear
**WMH**=Warm Haze
**G**=Specular Gold
**WH**=Wheat
**WHH**=Wheat Haze
**GP**=Graphite
**GPH**=Graphite Haze

**B**=Specular Black
**W**=Gloss White

### Options

**Self-flanged Only**
**WF**=White Painted Flange

### Accessories

**HB26**=C-channel Bar Hanger, 26" Long, Pair
**HB50**=C-channel Bar Hanger, 50" Long, Pair
**RMB22**=Wood Joist Bar Hanger, 22" Long, Pair
**H347**=347 to 120V Step Down Transformer, 75VA
**H347200**=347 to 120V Step Down Transformer, 200VA
**PORLWTPD1**= LumaWatt Pro Wireless Sensor Kit (0-10V only)

**Notes: 1** Nominal Lumens will vary depending on selected color, driver and reflector finish.
**2** Not available with Chicago Plenum.
**3** Not CSA approved.

## ENERGY

| ENERGY DATA | | | |
|---|---|---|---|
| Sound Rating: Class A standards | | | |
| (Values at non-dimming line voltage) | | | |
| Minimum Starting Temperature: -30°C (-22°F) | | | |
| EMI/RFI: FCC Title 47 CFR, Part 15, Class B (Consumer) | | | |
| Input Voltage: UNV (120V - 277V) | | | |
| Power Factor: >0.90 (at nominal input 120-277 VAC & 100% of Rated Output Power) | | | |
| Input Frequency: 50/60Hz | | | |
| **2800 Lumen D010TE** | | **1800 Lumen D010TE** | |
| Input Power: 43.4W | THD: <17% | Input Power: 31.5W | THD: <20% |
| 120V Input Current: .36A | 277V Input Current: .16A | 120V Input Current: .27A | 277V Input Current: .06A |

| **1300 Lumen D010TE** | | **900 Lumen D010TE** | |
|---|---|---|---|
| Input Power: 22.4W | THD: <20% | Input Power: 14.1W | THD: <20% |
| 120V Input Current: .12A | 277V Input Current: .09A | 120V Input Current: .12A | 277V Input Current: .06A |

| | 120V | | 277V | |
|---|---|---|---|---|
| Lumens | Inrush (A) | Duration (ms) | Inrush (A) | Duration (ms) |
| 900/1000 | 0.486 | 0.4 | 0.848 | 0.182 |
| 1300/1500 | 0.717 | 1.58 | 0.531 | 1.24 |
| 1800/2000 | 0.832 | 0.405 | 1.25 | 0.788 |
| 2800/3000 | 1.09 | 0.3 | 1.23 | 0.294 |

## PHOTOMETRICS

| | |
|---|---|
| Test Number | P133922 |
| Platform | LD4A13D010TE |
| Element | ERM4A13835 4LM111LI |
| Lumens | 1583 |
| Efficacy | 70.0 Lm/W |

### CANDLEPOWER DISTRIBUTION

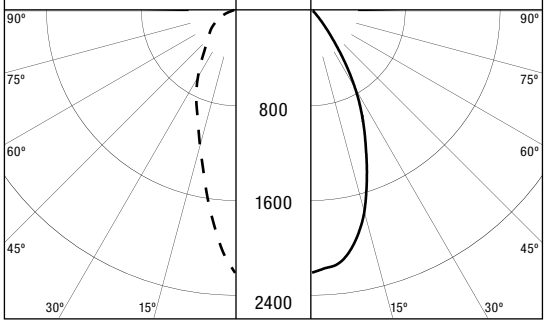


LEGEND:
0-deg: — — — —
90-deg: ————

### SINGLE UNIT FOOTCANDLES

| | 3' FROM WALL (Distance From Fixture Along Wall) | | | |
|---|---|---|---|---|
| DD | ● | 1' | 2' | 3' |
| 1' | 7 | 5 | 3 | 1 |
| 2' | 14 | 12 | 7 | 4 |
| 3' | 13 | 12 | 8 | 4 |
| 4' | 11 | 10 | 7 | 4 |
| 5' | 9 | 8 | 6 | 4 |
| 6' | 7 | 7 | 5 | 4 |
| 7' | 6 | 5 | 5 | 3 |
| 8' | 4 | 4 | 4 | 3 |
| 9' | 4 | 3 | 3 | 3 |
| 10' | 3 | 3 | 3 | 2 |

### MULTIPLE UNIT FOOTCANDLES

| | 2.5' FROM WALL (Spacing Between Fixtures) | | | | | | 3' FROM WALL (Spacing Between Fixtures) | | | | | |
|---|---|---|---|---|---|---|---|---|---|---|---|---|
| DD | ● | 2' | ● | ● | 3' | ● | ● | 2' | ● | ● | 3' | ● |
| 1' | 18 | 19 | 18 | 15 | 13 | 15 | 9 | 10 | 9 | 8 | 8 | 8 |
| 2' | 30 | 33 | 30 | 25 | 25 | 25 | 22 | 24 | 22 | 18 | 19 | 18 |
| 3' | 25 | 28 | 25 | 21 | 23 | 21 | 21 | 23 | 21 | 18 | 20 | 18 |
| 4' | 21 | 24 | 21 | 18 | 19 | 18 | 18 | 19 | 18 | 15 | 16 | 15 |
| 5' | 17 | 19 | 17 | 14 | 16 | 14 | 15 | 17 | 15 | 13 | 15 | 13 |
| 6' | 14 | 15 | 14 | 12 | 13 | 12 | 13 | 13 | 13 | 11 | 12 | 11 |
| 7' | 10 | 11 | 10 | 9 | 10 | 9 | 10 | 11 | 10 | 9 | 10 | 9 |
| 8' | 8 | 9 | 8 | 7 | 8 | 7 | 8 | 9 | 8 | 7 | 8 | 7 |
| 9' | 6 | 7 | 6 | 6 | 6 | 6 | 7 | 7 | 7 | 6 | 7 | 6 |
| 10' | 5 | 5 | 5 | 5 | 5 | 5 | 5 | 6 | 5 | 5 | 5 | 5 |

| | |
|---|---|
| Test Number | P133954 |
| Platform | LD4A18D010TE |
| Element | ERM4A18835 4LM111LI |
| Lumens | 2478 |
| Efficacy | 75.5 Lm/W |

### CANDLEPOWER DISTRIBUTION

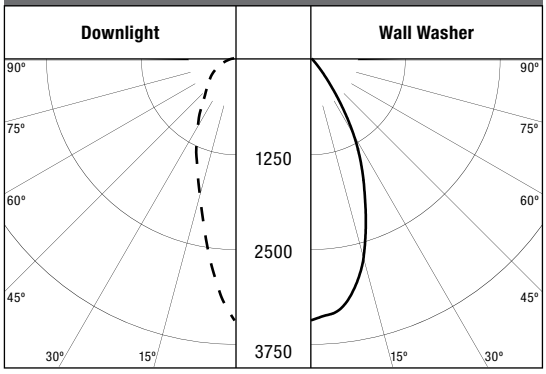


LEGEND:
0-deg: — — — —
90-deg: ————

### SINGLE UNIT FOOTCANDLES

| | 3' FROM WALL (Distance From Fixture Along Wall) | | | |
|---|---|---|---|---|
| DD | ● | 1' | 2' | 3' |
| 1' | 11 | 8 | 4 | 2 |
| 2' | 22 | 19 | 12 | 6 |
| 3' | 21 | 18 | 12 | 7 |
| 4' | 17 | 15 | 11 | 6 |
| 5' | 14 | 13 | 10 | 6 |
| 6' | 12 | 11 | 8 | 6 |
| 7' | 9 | 9 | 7 | 5 |
| 8' | 7 | 7 | 6 | 5 |
| 9' | 6 | 5 | 5 | 4 |
| 10' | 5 | 4 | 4 | 3 |

### MULTIPLE UNIT FOOTCANDLES

| | 2.5' FROM WALL (Spacing Between Fixtures) | | | | | | 3' FROM WALL (Spacing Between Fixtures) | | | | | |
|---|---|---|---|---|---|---|---|---|---|---|---|---|
| DD | ● | 2' | ● | ● | 3' | ● | ● | 2' | ● | ● | 3' | ● |
| 1' | 28 | 30 | 28 | 23 | 20 | 23 | 15 | 16 | 15 | 12 | 12 | 12 |
| 2' | 47 | 52 | 47 | 39 | 39 | 39 | 34 | 37 | 34 | 28 | 30 | 28 |
| 3' | 40 | 44 | 40 | 32 | 36 | 32 | 33 | 37 | 33 | 28 | 31 | 28 |
| 4' | 33 | 37 | 33 | 27 | 30 | 27 | 28 | 30 | 28 | 23 | 26 | 23 |
| 5' | 27 | 30 | 27 | 22 | 26 | 22 | 24 | 26 | 24 | 20 | 23 | 20 |
| 6' | 21 | 23 | 21 | 18 | 21 | 18 | 20 | 21 | 20 | 17 | 19 | 17 |
| 7' | 16 | 17 | 16 | 14 | 16 | 14 | 16 | 17 | 16 | 14 | 16 | 14 |
| 8' | 13 | 13 | 13 | 12 | 13 | 12 | 13 | 13 | 13 | 12 | 13 | 12 |
| 9' | 10 | 11 | 10 | 9 | 10 | 9 | 10 | 11 | 10 | 10 | 10 | 10 |
| 10' | 8 | 8 | 8 | 8 | 8 | 8 | 8 | 9 | 8 | 8 | 8 | 8 |

## PHOTOMETRICS

| | |
|---|---|
| Test Number | P133978 |
| Platform | LD4A28D010TE |
| Element | ERM4A28835 4LM111LI |
| Lumens | 2911 |
| Efficacy | 64.1 Lm/W |

### CANDLEPOWER DISTRIBUTION

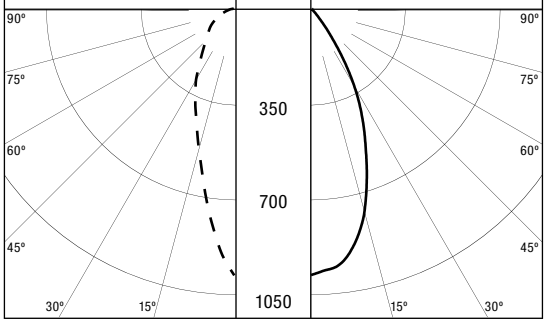


LEGEND:
0-deg: – – – –
90-deg: ——

### SINGLE UNIT FOOTCANDLES

| | 3' FROM WALL (Distance From Fixture Along Wall) | | | |
|---|---|---|---|---|
| DD | ● | 1' | 2' | 3' |
| 1' | 13 | 10 | 5 | 2 |
| 2' | 26 | 22 | 14 | 7 |
| 3' | 25 | 22 | 15 | 8 |
| 4' | 20 | 18 | 13 | 8 |
| 5' | 17 | 15 | 11 | 7 |
| 6' | 14 | 13 | 10 | 7 |
| 7' | 11 | 10 | 8 | 6 |
| 8' | 8 | 8 | 7 | 6 |
| 9' | 7 | 6 | 6 | 5 |
| 10' | 5 | 5 | 5 | 4 |

### MULTIPLE UNIT FOOTCANDLES

| | 2.5' FROM WALL (Spacing Between Fixtures) | | | | | | 3' FROM WALL (Spacing Between Fixtures) | | | | | |
|---|---|---|---|---|---|---|---|---|---|---|---|---|
| DD | ● | 2' | ● | ● | 3' | ● | ● | 2' | ● | ● | 3' | ● |
| 1' | 32 | 36 | 32 | 27 | 24 | 27 | 17 | 19 | 17 | 14 | 14 | 14 |
| 2' | 55 | 61 | 55 | 45 | 46 | 45 | 40 | 43 | 40 | 33 | 35 | 33 |
| 3' | 46 | 52 | 46 | 38 | 42 | 38 | 39 | 43 | 39 | 33 | 36 | 33 |
| 4' | 39 | 44 | 39 | 32 | 36 | 32 | 32 | 35 | 32 | 27 | 30 | 27 |
| 5' | 32 | 35 | 32 | 26 | 30 | 26 | 28 | 31 | 28 | 24 | 27 | 24 |
| 6' | 25 | 27 | 25 | 21 | 24 | 21 | 24 | 25 | 24 | 20 | 23 | 20 |
| 7' | 19 | 20 | 19 | 17 | 19 | 17 | 19 | 20 | 19 | 17 | 19 | 17 |
| 8' | 15 | 16 | 15 | 14 | 15 | 14 | 15 | 16 | 15 | 14 | 15 | 14 |
| 9' | 12 | 12 | 12 | 11 | 12 | 11 | 12 | 13 | 12 | 11 | 12 | 11 |
| 10' | 10 | 10 | 10 | 9 | 10 | 9 | 10 | 10 | 10 | 9 | 10 | 9 |

| | |
|---|---|
| Test Number | P166414 |
| Platform | LD4A13D010TE |
| Element | ERW4A13835 4LW111LI |
| Lumens | 1613 |
| Efficacy | 71.4 Lm/W |

### CANDLEPOWER DISTRIBUTION

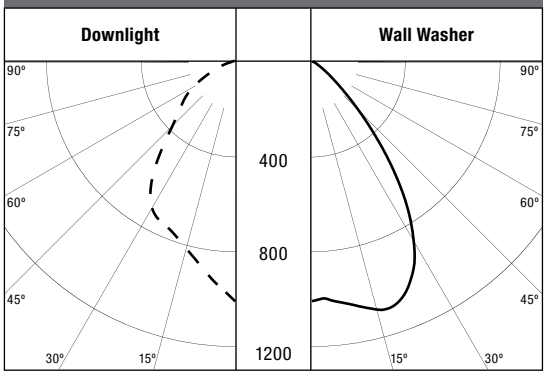


LEGEND:
0-deg: – – – –
90-deg: ——

### SINGLE UNIT FOOTCANDLES

| | 3' FROM WALL (Distance From Fixture Along Wall) | | | |
|---|---|---|---|---|
| DD | ● | 1' | 2' | 3' |
| 1' | 4 | 3 | 1 | 0 |
| 2' | 15 | 12 | 7 | 3 |
| 3' | 15 | 13 | 9 | 5 |
| 4' | 14 | 12 | 8 | 5 |
| 5' | 11 | 10 | 8 | 5 |
| 6' | 7 | 7 | 6 | 5 |
| 7' | 5 | 5 | 5 | 4 |
| 8' | 4 | 4 | 4 | 3 |
| 9' | 3 | 3 | 3 | 3 |
| 10' | 2 | 2 | 2 | 2 |

### MULTIPLE UNIT FOOTCANDLES

| | 2.5' FROM WALL (Spacing Between Fixtures) | | | | | | 3' FROM WALL (Spacing Between Fixtures) | | | | | |
|---|---|---|---|---|---|---|---|---|---|---|---|---|
| DD | ● | 2' | ● | ● | 3' | ● | ● | 2' | ● | ● | 3' | ● |
| 1' | 12 | 13 | 12 | 11 | 8 | 11 | 6 | 6 | 6 | 5 | 4 | 5 |
| 2' | 31 | 36 | 31 | 25 | 27 | 25 | 22 | 25 | 22 | 18 | 20 | 18 |
| 3' | 31 | 33 | 31 | 25 | 27 | 25 | 23 | 25 | 23 | 19 | 22 | 19 |
| 4' | 26 | 29 | 26 | 21 | 25 | 21 | 22 | 24 | 22 | 19 | 21 | 19 |
| 5' | 19 | 20 | 19 | 16 | 19 | 16 | 18 | 20 | 18 | 16 | 18 | 16 |
| 6' | 13 | 14 | 13 | 12 | 13 | 12 | 14 | 14 | 14 | 12 | 14 | 12 |
| 7' | 9 | 9 | 9 | 9 | 9 | 9 | 10 | 10 | 10 | 9 | 10 | 9 |
| 8' | 7 | 7 | 7 | 6 | 7 | 6 | 7 | 7 | 7 | 7 | 7 | 7 |
| 9' | 5 | 5 | 5 | 5 | 5 | 5 | 5 | 5 | 5 | 5 | 6 | 5 |
| 10' | 4 | 4 | 4 | 4 | 4 | 4 | 4 | 4 | 4 | 4 | 4 | 4 |

## PHOTOMETRICS

| | |
|---|---|
| Test Number | P134650 |
| Platform | LD4A18D010TE |
| Element | ERW4A18835 4LW111LI |
| Lumens | 2437 |
| Efficacy | 74.3 Lm/W |

### CANDLEPOWER DISTRIBUTION

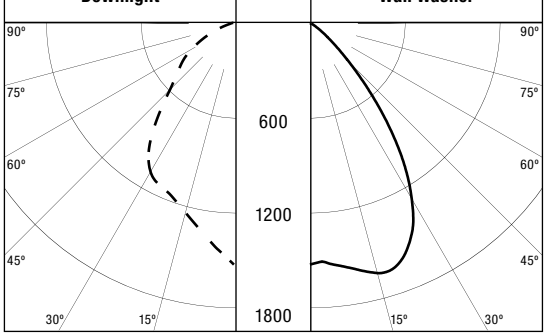


LEGEND:
0-deg: — — — —
90-deg: ————

### SINGLE UNIT FOOTCANDLES

3' FROM WALL (Distance From Fixture Along Wall)

| DD | ● | 1' | 2' | 3' |
|---|---|---|---|---|
| 1' | 7 | 4 | 2 | 1 |
| 2' | 23 | 19 | 11 | 4 |
| 3' | 22 | 19 | 13 | 7 |
| 4' | 21 | 18 | 13 | 7 |
| 5' | 16 | 15 | 12 | 8 |
| 6' | 11 | 11 | 10 | 7 |
| 7' | 8 | 8 | 7 | 6 |
| 8' | 6 | 6 | 5 | 5 |
| 9' | 4 | 4 | 4 | 4 |
| 10' | 3 | 3 | 3 | 3 |

### MULTIPLE UNIT FOOTCANDLES

2.5' FROM WALL (Spacing Between Fixtures)

| | | | | | | |
|---|---|---|---|---|---|---|
| ● | 2' | ● | ● | 3' | ● |
| 18 | 19 | 18 | 16 | 12 | 16 |
| 48 | 54 | 48 | 38 | 41 | 38 |
| 46 | 50 | 46 | 38 | 40 | 38 |
| 39 | 43 | 39 | 32 | 38 | 32 |
| 29 | 30 | 29 | 24 | 29 | 24 |
| 20 | 20 | 20 | 18 | 20 | 18 |
| 14 | 14 | 14 | 13 | 14 | 13 |
| 10 | 10 | 10 | 10 | 10 | 10 |
| 7 | 8 | 7 | 7 | 8 | 7 |
| 6 | 6 | 6 | 6 | 6 | 6 |

3' FROM WALL (Spacing Between Fixtures)

| | | | | | | |
|---|---|---|---|---|---|---|
| ● | 2' | ● | ● | 3' | ● |
| 9 | 9 | 9 | 7 | 6 | 7 |
| 33 | 37 | 33 | 27 | 30 | 27 |
| 35 | 38 | 35 | 29 | 33 | 29 |
| 33 | 36 | 33 | 28 | 31 | 28 |
| 28 | 30 | 28 | 24 | 27 | 24 |
| 21 | 21 | 21 | 18 | 21 | 18 |
| 15 | 15 | 15 | 14 | 15 | 14 |
| 11 | 11 | 11 | 10 | 11 | 10 |
| 8 | 8 | 8 | 8 | 8 | 8 |
| 6 | 6 | 6 | 6 | 6 | 6 |

| | |
|---|---|
| Test Number | P134674 |
| Platform | LD4A28D010TE |
| Element | ERW4A28835 4LW111LI |
| Lumens | 2881 |
| Efficacy | 63.5 Lm/W |

### CANDLEPOWER DISTRIBUTION

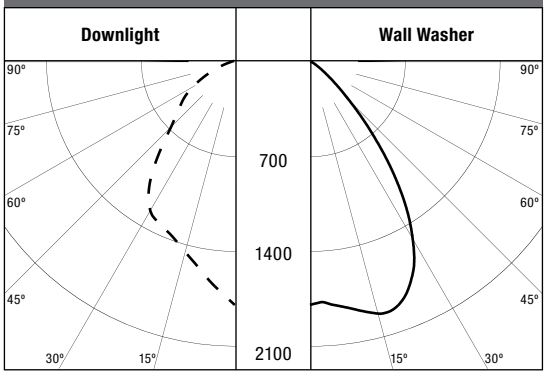


LEGEND:
0-deg: — — — —
90-deg: ————

### SINGLE UNIT FOOTCANDLES

3' FROM WALL (Distance From Fixture Along Wall)

| DD | ● | 1' | 2' | 3' |
|---|---|---|---|---|
| 1' | 8 | 5 | 2 | 1 |
| 2' | 27 | 22 | 13 | 5 |
| 3' | 26 | 22 | 16 | 9 |
| 4' | 25 | 21 | 15 | 9 |
| 5' | 19 | 17 | 14 | 9 |
| 6' | 13 | 13 | 11 | 8 |
| 7' | 9 | 9 | 9 | 7 |
| 8' | 7 | 7 | 6 | 6 |
| 9' | 5 | 5 | 5 | 5 |
| 10' | 4 | 4 | 4 | 4 |

### MULTIPLE UNIT FOOTCANDLES

2.5' FROM WALL (Spacing Between Fixtures)

| | | | | | | |
|---|---|---|---|---|---|---|
| ● | 2' | ● | ● | 3' | ● |
| 22 | 23 | 22 | 19 | 14 | 19 |
| 56 | 64 | 56 | 45 | 49 | 45 |
| 55 | 60 | 55 | 45 | 48 | 45 |
| 47 | 51 | 47 | 38 | 44 | 38 |
| 34 | 36 | 34 | 28 | 34 | 28 |
| 23 | 24 | 23 | 21 | 24 | 21 |
| 16 | 17 | 16 | 15 | 17 | 15 |
| 12 | 12 | 12 | 11 | 12 | 11 |
| 9 | 9 | 9 | 9 | 9 | 9 |
| 7 | 7 | 7 | 7 | 7 | 7 |

3' FROM WALL (Spacing Between Fixtures)

| | | | | | | |
|---|---|---|---|---|---|---|
| ● | 2' | ● | ● | 3' | ● |
| 10 | 11 | 10 | 9 | 7 | 9 |
| 39 | 44 | 39 | 32 | 35 | 32 |
| 41 | 45 | 41 | 34 | 39 | 34 |
| 40 | 43 | 40 | 33 | 37 | 33 |
| 33 | 35 | 33 | 28 | 32 | 28 |
| 24 | 25 | 24 | 22 | 24 | 22 |
| 18 | 18 | 18 | 16 | 18 | 16 |
| 13 | 13 | 13 | 12 | 13 | 12 |
| 10 | 10 | 10 | 9 | 10 | 9 |
| 8 | 8 | 8 | 7 | 8 | 7 |

## EM MULTIPLIER DATA

| LUMENS | EM MULTIPLIER | |
|---|---|---|
| | 7 | 14 |
| 900/1000 | 0.50 | 0.99 |
| 1300/1500 | 0.29 | 0.57 |
| 1800/2000 | 0.22 | 0.44 |
| 2800/3000 | 0.16 | 0.32 |

# Lumière

## DESCRIPTION

Boca 696 is a compact 6-1/4" diameter by 9-1/4"deep in-ground LED luminaire. The adjustable lamp assembly provides +/- 22° vertical tilt and 360° horizontal rotation for precision uplighting, wall washing or general illumination in constricted areas. Designed for recessed mounting in concrete, brick, stone or dirt, it is suitable for drive-over applications. Fixture is also suitable for recessed mounting in indoor or outdoor wood flooring. A surface mount trim option is also available. Various lenses, louvers and color or dichroic filters can be combined – up to three at once – to create multiple lighting effects.

| | | |
|---|---|---|
| Catalog # | 696-10LED-3041-120/12 BZ | Type: ALR-06 |
| Project | Aloft | Revision Date: |
| Comments | | Date |
| Prepared by | Kathleen Kenny | |

## SPECIFICATION FEATURES

**Construction**
Recessed housing is constructed from corrosion-resistant, glass reinforced polyester BMC molding compound and includes two 1/2-14 NPSM conduit fittings for through wiring. Recessed housing and trim ring are sealed with a high temperature silicone molded gasket to prevent water intrusion. The painted trim ring is precision machined from corrosion resistant 6061-T6 aluminum. The trim ring is also available in machined C360 brass, C932 bronze, C10 copper or 303/304 stainless steel, brass, bronze or machined copper.

**Finish**
The painted trim is double protected by a ROHS compliant chemical film undercoating and polyester powder coat finish. A variety of standard colors are available or RAL and custom color matches are avaialble upon request. Trims constructed from brass, bronze, copper and stainless steel are left unpainted to reveal the natural beauty of the material. Brass, bronze and copper will patina naturally over time.

**Lens**
Minimum 1/4" thick tempered glass lens, factory sealed with high temperature adhesive to prevent water intrusion. Suitable for drive-over applications up to 5000 pounds.

**Hardware**
Stainless steel hardware is standard to provide maximum corrosion-resistance.

**Electrical**
When ordered as a line voltage fixture, an integral 12V magnetic transformer is included for connection to 120V, 230V, 240V, or 277V line voltage (specify). When ordered as a low voltage fixture, a remote 12V transformer is required (not included). Dimming only available for 120V option. See technical notes for compatible dimmer switches.

**LED Modules**
LED modules are included and are available in four color temperatures (2700,3000,4000,5700) or Amber (585-595nm) and three distributions (spot, narrow, and flood). Both color temperature and distribution must be specified when ordering. Module has a L70 / 60,000 hour rating.

**Warranty**
Lumière warrants its fixtures against defects in materials & workmanship for three (3) years. Auxiliary equipment such as transformers carry the original manufacturer's warranty.

**Recessed Housing**
Recessed housing is available to ship in advance of complete fixture for rough-in purposes. Specify option -LBB and order separately the accompanying recessed housing from below.

Recessed Housing
600-BB

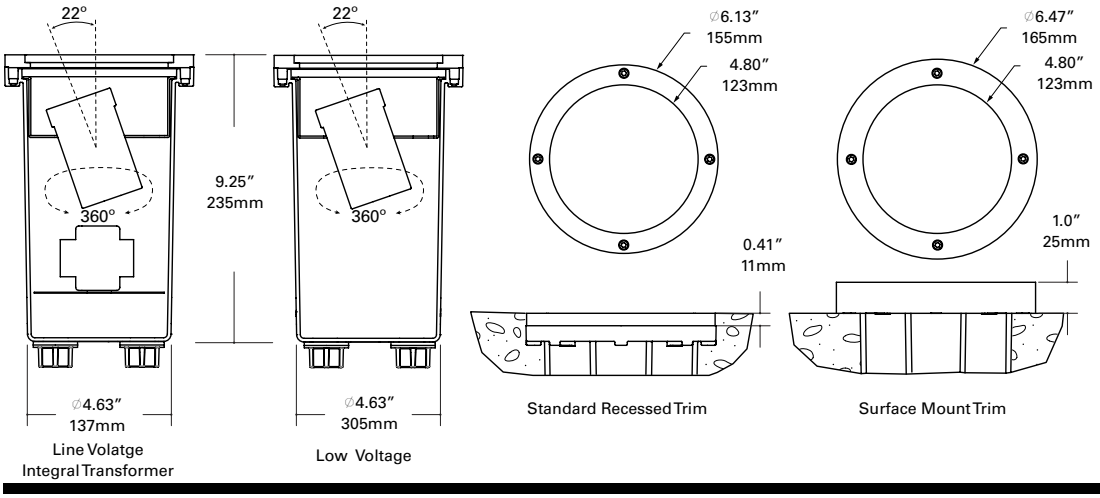

**696**
BOCA
**LED**

**APPLICATIONS:**
**GROUND-MOUNT**
**RECESSED**

**CERTIFICATION DATA**
UL and cUL Wet Location Listed
LM79 / LM80 Compliant
LM70 / 60,000 Hours
ROHS Compliant
IP67 IngresseProtection Rated

**TECHNICAL DATA**
External Supply Wiring 90°C Minimum

## ORDERING INFORMATION

**Sample Number: 696-10LED2712-120/12-BK**

| Series | Trim | Source (select from each column and combine) | | | Voltage | Finish [1] | Options [2] |
|---|---|---|---|---|---|---|---|
| **696**=6 1/4" dia. Boca Inground LED Uplight, 22°Tilt, 360° Rotation | **[Blank]**= Standard Round Trim<br>**SM**= Round Surface Mount Trim | **6LED**=6W LED<br>**10LED**=10W LED | **27**=2700K<br>**30**=3000K<br>**40**=4000K<br>**57**=5700K | **12**=12° Spot<br>**21**=21° Narrow<br>**41**=41° Wide | **12**=12 Volt Remote Transformer Required (not included)<br>**120/12**=120V Integral Transformer<br>**230/12**=230V Integral Transformer<br>**240/12**=240V Integral Transformer<br>**277/12**=277V Integral Transformer | **Painted**<br>**BK**=Black<br>**BZ**=Bronze<br>**CS**=City Silver<br>**VE**=Verde<br>**WT**=White<br>**Premium Finish**<br>**NBR**=Natural Brass<br>**NCP**=Natural Copper<br>**NBZ**=Natural Bronze<br>**NSS**=Natural Stainless Steel | **LBB**=Less Back Box |
| | | **4LED**=4W LED<br>**7LED**=7W LED | **AM**=Amber (585-595nm) | | | | |

**NOTES: 1** Custom and RAL color matching available upon request. Consult factory for further information. **2** When specifying LBB option the back box needs to be ordered seperately 600-BB.

## ACCESSORIES - ORDER SEPARATELY

| Dichroic Filters (2.00" Diameter) | Color Filters (2.00" Diameter) | Optical Lenses (2.00" Diameter) | Optical Louvers (2.00" Diameter) |
|---|---|---|---|
| **F71** = Peach Dichroic<br>**F72** = Amber Dichroic<br>**F73** = Green Dichroic<br>**F74** = Medium Blue Dichroic<br>**F75** =Yellow Dichroic<br>**F76** = Red Dichroic<br>**F77** = Dark Blue Dichroic<br>**F78** = Light Blue Dichroic<br>**F79** = Neutral Density Dichroic<br>**F80** = Magenta Dichroic | **F22** = Red Color<br>**F33** = Blue Color<br>**F44** = Green Color<br>**F55** =Yellow Color<br>**F66** = Mercury Vapor | **LSL**=Linear Spread Lens (elongates standard beam spread)<br>**DIF**=Diffused Lens (provides even illumination)<br>**OSL**=Overall Spread Lens (increases standard beam spread) | **LVR**=45° Hex Cell Louver (reduces glare) |

## PHOTOMETRY

| OPTIC TYPE (beam spread) | BASE + ACCESSORY OPTIONS | 4000K CCT | | | | | |
|---|---|---|---|---|---|---|---|
| | | 10W | | | 6W | | |
| | | CBCP | LUMENS | LPW | CBCP | LUMENS | LPW |
| 12° | BASE | 8049 | 418 | 44 | 6037 | 314 | 53 |
| | + DIF (DIFFUSE) | 1188 | 336 | 36 | 891 | 252 | 43 |
| | + OSL (OVERALL SPREAD LENS) | 886 | 368 | 40 | 665 | 276 | 47 |
| | + LSL (LINEAR SPREAD LENS) | NA | 378 | 41 | NA | 284 | 48 |
| | + LVR (HEXCELL LOUVER) | 6799 | 332 | 35 | 5099 | 249 | 42 |
| 21° | BASE | 2129 | 370 | 40 | 1597 | 278 | 47 |
| | + DIF (DIFFUSE) | 648 | 300 | 33 | 486 | 225 | 38 |
| | + OSL (OVERALL SPREAD LENS) | 596 | 337 | 37 | 447 | 253 | 43 |
| | + LSL (LINEAR SPREAD LENS) | NA | 329 | 36 | NA | 247 | 42 |
| | + LVR (HEXCELL LOUVER) | 2007 | 268 | 29 | 1505 | 201 | 34 |
| 41° | BASE | 1169 | 361 | 39 | 877 | 271 | 46 |
| | + DIF (DIFFUSE) | 410 | 278 | 30 | 308 | 209 | 36 |
| | + OSL (OVERALL SPREAD LENS) | 509 | 318 | 35 | 382 | 239 | 41 |
| | + LSL (LINEAR SPREAD LENS) | NA | 315 | 34 | NA | 236 | 40 |
| | + LVR (HEXCELL LOUVER) | 1004 | 213 | 23 | 753 | 160 | 27 |

## CCT MULTIPLIER TABLE

| CCT(K) / COLOR | MULTIPLIER |
|---|---|
| 2700K | 0.79 |
| 3000K | 0.86 |
| 4000K | 1.00 |
| 5700K | 1.05 |
| AMBER | 0.57 |

Note: Multiplier can be used to calculate center beam candle power (CBCP), Lumens and footcandle (FC) values.

## CONE OF LIGHT

**Horizontal Illuminance on Surface - Boca 696 CCT of 4000K with Various Beam Spreads**

**CONE OF LIGHT**

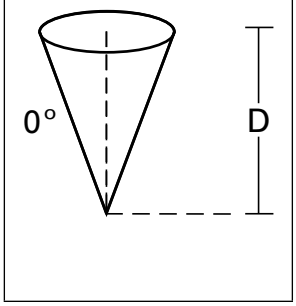


**Filename: 696-10LED4012-12-BK.ies**
**Test No.: P26954**

| D | FC | Beam Diameter |
|---|---|---|
| 2' | 2012.2 | 0.4 |
| 4' | 503.1 | 0.8 |
| 6' | 223.6 | 1.2 |
| 8' | 125.8 | 1.6 |
| 10' | 80.5 | 2.0 |
| 15' | 35.8 | 3.0 |
| 20' | 20.1 | 4.0 |
| 30' | 8.9 | 6.0 |
| 40' | 5.0 | 8.0 |

**Filename: 696-10LED4021-12-BK.ies**
**Test No.: P26955**

| D | FC | Beam Diameter |
|---|---|---|
| 2' | 532.2 | 0.6 |
| 4' | 133.1 | 1.4 |
| 6' | 59.1 | 2 |
| 8' | 33.3 | 2.8 |
| 10' | 21.3 | 3.4 |
| 15' | 9.5 | 5.2 |
| 20' | 5.3 | 7 |
| 30' | 2.4 | 10.6 |
| 40' | 1.3 | 14.2 |

**Filename: 696-10LED4041-12-BK.ies**
**Test No.: P26953**

| D | FC | Beam Diameter |
|---|---|---|
| 2' | 289.9 | 0.8 |
| 4' | 72.5 | 1.6 |
| 6' | 32.2 | 2.5 |
| 8' | 18.1 | 3.4 |
| 10' | 11.6 | 4.2 |
| 15' | 5.2 | 6.4 |
| 20' | 2.9 | 8.5 |
| 30' | 1.3 | 12.9 |
| 40' | 0.7 | 17.2 |

## TECHNICAL INFORMATION

1. When selecting integral transformer option, dimming is only possible at 120V using a magnetic dimmer switch. There are two compatible magnetic dimming switches: Lutron Ariadni AVLV-600P and Lutron Diva DVLV-600P
2. When selecting low voltage option dimming is dependant on remote transformer compatibility with LED module.
3. IMPORTANT: For the low voltage option - when sizing the transformer use 9 watts for 6LED or 15 watts for 10LED option fixture. Nominal power draw after start up is 6 watts or 10 watts accordingly. The LED module is designed to operate between 10 and 13 volts. Any less or more voltage can cause premature failures.
4. IMPORTANT: Apply gray duct sealing compound (not included) to completely seal the wires inside the bottom male conduit nipple. Completely seal the bottom of the fixture. The gray duct sealing compound by itself cannot seal the hubs. We recommend using re-enterable potting seal material such as 3M High Gel 4442 re-enterable encapsulant (not Included) to completely seal the bottom of the fixture and the conduit lines.
5. Suitable for installation in combustible materials such as wood decking.

HALO®

## Description

Recessed 4" aperture ultra-shallow new construction housing for use with LED integrated trims. Suitable for 2x4 residential framing or shallow plenum commercial construction, type IC rated and can be used in direct contact with insulation. Airtight rating reduces airflow between living spaces and unconditioned areas providing additional energy savings. Use with Halo LT4, RL4, RA4, SMD4, SLD4 LED integrated trims and the ML4 LED modular recessed lighting system.

| | | |
|---|---|---|
| Catalog # | H245ICAT-ML4D09NFL930E-TL43R-3G-MWWB | Type |
| Project | Aloft | ALR-08 |
| Comments | | Revision Date: |
| Prepared by | Kathleen Kenny, National Accounts, 678-447-5208, kathleenkenny@eaton.c | Date |

## Specification Features

### Housing
- Single wall deep drawn aluminum housing painted matte black for a visually dark interior
- Adjusts vertically to accommodate 1/2" to 1-1/4" thick ceilings and locks in position with (3) setscrews
- V notches on plaster lip facilitate use of guide strings or laser lines for precise positioning
- Integral gasket provides for airtight compliance
- Shipped with overspray protector installed
- Housing can be removed from below the ceiling for service or splice inspection

### Plaster Frame
- Compact galvanized steel plaster frame with integral bar hanger receivers
- Regressed screw provide positive horizontal bar hanger locking from below the ceiling
- Crimp points also provide for horizontal bar hanger locking

### Bar Hangers
- Captive preinstalled Got-Nail™ bar hangers support housing at any point along span
- Pass-N-Thru™ feature adjust from 8" to 24" wide without removal
- Score lines allow "tool-less" shortening for 12˝ joists
- Captive nail penetrates standard and engineered lumber
- Safety and guidance system prevents snagging, ensures smooth straight nail penetration and allows bar hangers to be easily removed and repositioned
- Leveling flange aligns plaster frame with structure
- Integral clip attaches directly to tee-bar

### Junction Box
- Compact galvanized steel junction box with 15in$^3$ internal volume
- Listed for (10) #12 AWG 90˚ C splice conductors
- (5) ½" conduit pry-outs positioned to allow straight conduit runs
- (3) Slide-N-Side™ non-metallic (NM) wire traps allows wiring outside the box
- Accepts 14-2, 14-3, 12-2, 12-3 U.S. and 14-2, 14-3, 12-2 Canadian NM cable
- (3) 4-port push wire nuts with clear caps for quick and reliable mains voltage connections

### Connector
- Two-conductor wire mount connector is rated for 120/277V and mates with Halo LT4, RL4, RA4, SLD, SMD and ML4 family of LED integrated trims.
  **CAUTION:** verify LED module input voltage is compatible with the input voltage of the housing. If uncertain, consult a qualified electrician

### Code Compliance
- Type IC inherently protected, suitable for direct contact to air permeable insulation and cULus listed for damp locations
- Not for use in direct contact with spray foam insulation, consult NEMA LSD57-2013
- Wet location listed in covered ceilings and IP66 certified with select trims
- Airtight per ASTM-E283
- Can be used for State of California Title 24 high efficacy luminaire compliance
- Suitable for use in clothes closets when installed in accordance with the NEC 410.16 spacing requirements
- Contains no mercury or lead and RoHS compliant

### Warranty
- Five year limited warranty, consult website for details www.eaton.com/lighting/legal

## H245ICAT

**4" Ultra-Shallow Recessed New Construction Housing**

**For Integrated LED Trims and Modules**

**15W Maximum**

## Dimensions

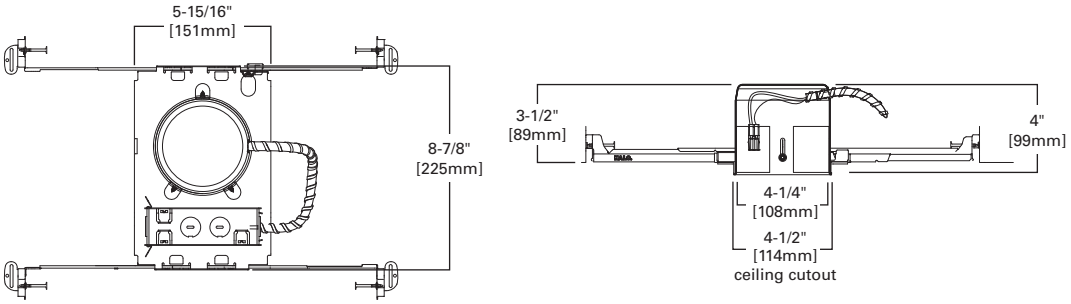


## Ordering Information

A complete luminaire consists of a housing, LED module and trim, order separately.

| Housing | Trims |
|---|---|
| **H245ICAT**= 4" ultra-shallow new construction housing for LED integrated trims or modules | LT4<br>RA4<br>RL4<br>ML4<br>SMD4<br>SLD4 |

airLite™

Efficiency Standards T24 California Title 24 Residential and Non-Residential Compliant


Eaton
1121 Highway 74 South
Peachtree City, GA 30269
P: 770-486-4800
www.eaton.com/lighting


Powering Business Worldwide

Specifications and dimensions subject to change without notice.

## Description

Recessed LED module with interchangeable 2-inch round or square lens pinhole apertures are available in various finishes to suit any décor. Use with 4-inch nominal recessed housings suitable for residential and shallow plenum commercial construction or can be used to retrofit existing installations. Field interchangeable primary optics provide various distribution patterns and spacing to mounting height ratios. Use for general and task lighting in low to medium height ceilings where energy savings, long life and optical control are required.

| | | |
|---|---|---|
| Catalog # | H245ICAT-ML4D09NFL930E-TL43R-3G-MWWB | Type |
| Project | Aloft | ALR-08 |
| Comments | | Revision Date: |
| Prepared by | Kathleen Kenny, National Accounts, 678-447-5208, kathleenkenny@eaton.com | Date |

## Specification Features

### Module
- Field interchangeable and upgradable LED module consists of LED array, primary optic and driver.
- Integral die cast aluminum heat sink provides passive thermal cooling achieving L70 at 50,000 hours in IC and non-IC applications.

### Retention
- Heat treated compression springs hold module securely in the housing, can be removed thru the aperture for service or replacement

### LED Array
- Proximity phosphors over chip on board LEDs provide a uniform source with high efficiency and no pixilation.
- Available in 90 CRI minimum, R9 greater than 50 and color accuracy within 3 SDCM provide color accuracy and uniformity.
- Compatible with Zhaga book 12 standards for interchangeability and can be replaced in the field

### Gaskets
- Closed cell gaskets achieve restrictive airflow requirements without additional caulking

### Primary Optic
- Precision molded TIR optic organizes source flux into useful beams without stray lumens in the field.
- Two-piece construction with matte black mounting ring and polarized turn and lock mounting aligns optic to source and minimizes backlight in the housing.
- Exceeds ENERGY STAR® color angular uniformity requirements, color deviation is typically less than 0.002 u' v'.
- Available in narrow flood, flood and wide flood distributions, ordered separately, ships with narrow flood installed.
- Also available in asymmetric distribution providing vertical illumination

### Trims
- Die formed steel trims are available in 2-inch round or square pinhole apertures and can be interchanged in the field.
- Available in a broad range of painted or plated finishes, can be painted in the field to match any décor.
- Magnetic attachment holds trim tightly to ceiling and eliminates light leaks.

### Shielding
- Diffuse clear lens provides light control and source shielding.

### Driver
- Integral UNV 120 - 277V 50/60 Hz constant current driver provides noise free operation.
- Continuous, flicker-free dimming from 100% to 5% with select leading or trailing edge 120V phase cut dimmers.
- Inline electrical quick connect and E26 adapter (provided) provides mains connection.
- Driver can be replaced in the field.

### Compliance
- cULus listed / certified for use with Halo housings, classified for use with other's housings, see instruction sheet for conditions of acceptability.
- Wet location listed in covered ceilings and IP65 certified.
- Airtight per ASTM-E283.
- Suitable for use in clothes closets when installed in accordance with the NEC 410.16 spacing requirements
- EMI/RFI emissions per FCC 47CFR Part 15 B.
- Contains no mercury or lead and RoHS compliant.
- Photometric testing in accordance with IES LM-79-08.
- Lumen maintenance projections in accordance with IES LM-80-08 and TM-21-11.
- Can be used for State of California Title 24 high efficacy luminaire compliance, reference the California Energy Commission Title 20 Appliance Efficiency Database for current listings.
- ENERGY STAR® listed, reference qualified product listings.
- Meets State of California voluntary lamp standards.
- Zhaga book 12 compatible.

### Warranty
Five year limited warranty, consult website for details.
www.eaton.com/lighting//Legal

ENERGY STAR

T24 Can be used to comply with California Title 24 High Efficacy requirements
T20 Certified to California Title 20 Appliance Database

Zhaga

Refer to ENERGY STAR® Certified Products List.
Can be used to comply with California Title 24 High Efficacy requirements.
Certified to California Title 20 Appliance Efficiency Database.

Eaton is a founding member of the Zhaga Consortium

## ML4D
## TL43R
## TL44S

**900 Lumen Series**

**LED**

**2-Inch Round and Square Lens Pinhole Downlight**

90 CRI nominal CCT 2700K 3000K 3500K 4000K

## Dimensions

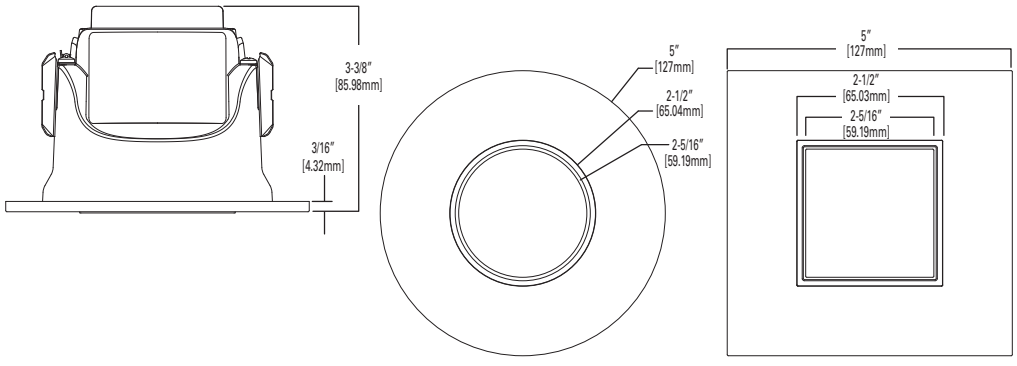


| ENERGY DATA | | |
|---|---|---|
| Lumens | 900 Series | |
| Input Voltage | 120V | 277V |
| Input Current | 101.6 (mA) | 45.7 (mA) |
| Input Power | 12.1 (W) | 11.9 (W) |
| Efficiency | 84.93 % | 83.45 % |
| Inrush (A) | 1.3 | 4.7 |
| THD: ≤ 20% | | |
| PF: ≥ 0.90 | | |
| T Ambient -40 - +40°C | | |
| Sound Rating ≤ 20dba | | |

## Ordering Information

**SAMPLE NUMBER:** ML4D09NFL927E - TL43R2GMWWB
A complete luminaire consists of a housing, LED module and trim, order separately.

| Models | Lumens | Distribution | CRI/CCT | Driver | Accessories |
|---|---|---|---|---|---|
| **ML4D**= 4" LED module | **09**=900 lumens (nominal) | **NFL**=25 degree narrow flood | **927**=90 CRI , 2700K<br>**930**=90 CRI , 3000K<br>**935**=90 CRI , 3500K<br>**940**=90 CRI , 4000K | **E**=UNV 120 - 277V 50-60Hz, LE & TE phase cut 5% dimming at 120V only | **TIR50AWW25** =asymmetric wall wash<br>**TIR50NFL25**=25° narrow flood<br>**TIR50FL40**=40° flood<br>**TIR50WFL55**=55° wide flood<br>**LH501MB12PK**=Media holder for (1) 50mm lens, matte black, 12 pack |

| Trims | Shielding | Flange Finish | Accessories |
|---|---|---|---|
| **TL43R**= 2" round lens pinhole<br>**TL44S**= 2" square lens pinhole | **2G**=Diffuse clear | **MWWB**=Matte white flange, white lens frame<br>**MWBB**=Matte white flange, black lens frame<br>**MBBB**=Matte black flange, black lens frame<br>**BNBB**=Brushed nickel flange, black lens frame<br>**ORBBB**=Oil rubbed bronze flange, black lens frame<br>**GBBB**=German bronze flange, black lens frame<br>**BCuBB**=Brushed copper, black lens frame | **T24HWKIT**=Title 24 hard wire kit, converts incandescent, low voltage and compact fluorescent housings to LED |

### Housings

**H245RICAT**=4" IC, airtight ultra-shallow remodeler housing, LED, 120 - 277V
**H99TAT**=4" non-IC, airtight shallow new construction housing, E26, 120V
**H99RTAT**=4" non-IC, airtight shallow remodeler housing, E26, 120V
**H99ICAT**=4" IC, airtight shallow new construction housing, E26, 120V
**H995ICAT**=4" IC, airtight shallow new construction housing, LED, 120 - 277V
**H995RICAT**=4" IC, airtight shallow remodeler housing, LED, 120 - 277V
**E4TATSB**=4" non-IC, airtight shallow new construction housing, adjustable socket bracket, E26, 120V
**E4RTATSB**=4" non-IC, airtight shallow remodeler housing, adjustable socket bracket, E26, 120V
**E4ICATSB**=4" non-IC, airtight shallow new construction housing, adjustable socket bracket, E26, 120V
**H4NCMF**=4" new construction mounting frame
**HS4R**=Surface round, 120-277V
**HS4S**=Surface square, 120-277V

## Photometry

### ML4D09NFL930-TIR50NFL25-TL43R2G_X_ TL44S2GX

| | |
|---|---|
| Description | Halo 2 Inch ML4 Round And Square Lensed Downlight-Narrow Flood Distribution |
| Test Number | P189395 |
| Module | 900 Series, 90CRI, Narrow Flood optic |
| Trim | 2" Aperture, Open Round DL |
| Lumens | 916 Lm |
| Efficacy | 79.83 |
| Spacing Criteria | 0.39 |
| CPCB | 4688.3 |
| Beam Angle (FWHM) | 26.6 |

**Color Metric Summary**

| | |
|---|---|
| TM-30-15 | $R_f$ = 91.5 |
| | $R_g$ = 97.7 |
| CRI/ CIE | $R_a$ = 92.8 |
| | $R_9$ = 57.4 |

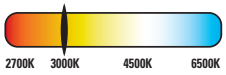

**Candlepower Distribution**

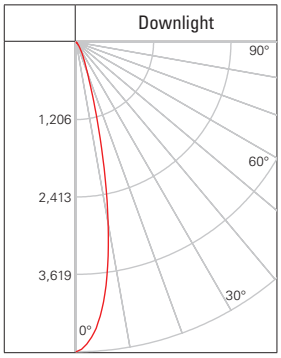


**Candelas at Nadir**

| Angle | 0-deg |
|---|---|
| 0 | 4688 |
| 5 | 4166 |
| 10 | 2790 |
| 20 | 504 |
| 30 | 139 |
| 40 | 39 |
| 50 | 11 |
| 60 | 5 |
| 70 | 3 |
| 80 | 2 |
| 90 | 0 |

**Foot-candle Values at Nadir**

| 0 deg Aiming Angle | | |
|---|---|---|
| DD | FC | DIA |
| 5.5' | 155 | 2 |
| 7' | 95.7 | 2.6 |
| 8' | 73.3 | 3 |
| 9' | 57.9 | 3.4 |
| 10' | 46.9 | 3.8 |
| 12' | 32.6 | 4.6 |

DD = distance down to illuminated work plane
FC = initial foot-candles at nadir
DIA = diameter

### ML4D09NFL930-TIR50FL40-TL43R2G_X_ TL44S2GX

| | |
|---|---|
| Description | Halo 2 Inch ML4 Round And Square Lensed Downlight- Flood Distribution |
| Test Number | P189401 |
| Module | 900 Series, 90CRI, Flood optic |
| Trim | 2" Aperture, Open Round DL |
| Lumens | 919 Lm |
| Efficacy | 78.94 |
| Spacing Criteria | 0.64 |
| CPCB | 1868 |
| Beam Angle (FWHM) | 39.3 |

**Color Metric Summary**

| | |
|---|---|
| TM-30-15 | $R_f$ = 91.4 |
| | $R_g$ = 97.7 |
| CRI/ CIE | $R_a$ = 92.7 |
| | $R_9$ = 57.2 |

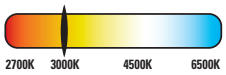


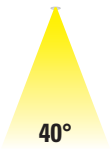


**Candlepower Distribution**

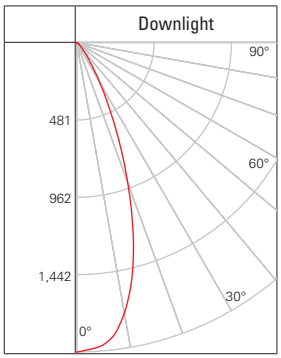


**Candelas at Nadir**

| Angle | 0-deg |
|---|---|
| 0 | 1868 |
| 5 | 1832 |
| 10 | 1658 |
| 20 | 903 |
| 30 | 278 |
| 40 | 70 |
| 50 | 21 |
| 60 | 8 |
| 70 | 4 |
| 80 | 2 |
| 90 | 0 |

**Foot-candle Values at Nadir**

| 0 deg Aiming Angle | | |
|---|---|---|
| DD | FC | DIA |
| 5.5' | 61.8 | 3.4 |
| 7' | 38.1 | 4.4 |
| 8' | 29.2 | 5 |
| 9' | 23.1 | 5.8 |
| 10' | 18.7 | 6.4 |
| 12' | 13 | 7.6 |

DD = distance down to illuminated work plane
FC = initial foot-candles at nadir
DIA = diameter

### ML4D09NFL930-TIR50WFL55-TL43R2G_X_ TL44S2GX

| | |
|---|---|
| Description | Halo 2 Inch ML4 Round And Square Lensed Downlight-Wide Flood Distribution |
| Test Number | P189407 |
| Module | 900 Series, 90CRI, Wide Flood optic |
| Trim | 2" Aperture, Open Round DL |
| Lumens | 857 Lm |
| Efficacy | 74.41 |
| Spacing Criteria | 0.78 |
| CPCB | 1032.3 |
| Beam Angle (FWHM) | 52.1 |

**Color Metric Summary**

| | |
|---|---|
| TM-30-15 | $R_f$ = 91.4 |
| | $R_g$ = 97.6 |
| CRI/ CIE | $R_a$ = 92.7 |
| | $R_9$ = 57.1 |

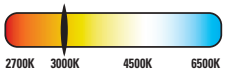


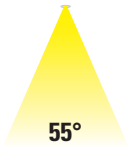


**Candlepower Distribution**

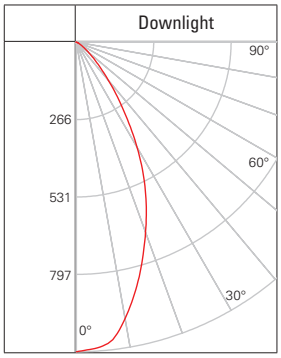


**Candelas at Nadir**

| Angle | 0-deg |
|---|---|
| 0 | 1032 |
| 5 | 1017 |
| 10 | 936 |
| 20 | 675 |
| 30 | 406 |
| 40 | 166 |
| 50 | 54 |
| 60 | 16 |
| 70 | 5 |
| 80 | 1 |
| 90 | 0 |

**Foot-candle Values at Nadir**

| 0 deg Aiming Angle | | |
|---|---|---|
| DD | FC | DIA |
| 5.5' | 34.1 | 4.2 |
| 7' | 21.1 | 5.4 |
| 8' | 16.1 | 6.2 |
| 9' | 12.7 | 7 |
| 10' | 10.3 | 7.8 |
| 12' | 7.2 | 9.2 |

DD = distance down to illuminated work plane
FC = initial foot-candles at nadir
DIA = diameter

### ML4D09NFL930-TIR50AWW25-TL43R2GMWWB_ TL44S2GMWWB

| | |
|---|---|
| Description | Halo 2 Inch ML4 Round And Square Lensed Downlight-Asymmetric |
| Test Number | P189448 |
| Module | 900 Series, 90CRI, Asymmetric |
| Trim | 2" Aperture, Open Round DL |
| Lumens | 683 Lm |
| Efficacy | 61.03 |
| Spacing Criteria | 1.51 |
| Peak intensity | 2070 |
| Peak angle | 23 |

**Color Metric Summary**

| | |
|---|---|
| TM-30-15 | $R_f$ = 91.4 |
| | $R_g$ = 97.6 |
| CRI/ CIE | $R_a$ = 92.7 |
| | $R_9$ = 57.0 |

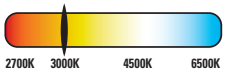


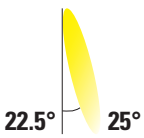


**Candlepower Distribution**

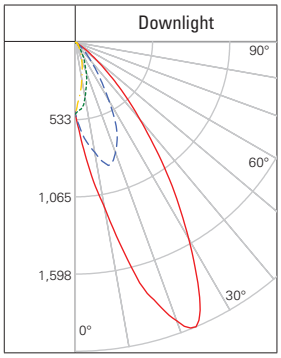


**Candelas at Nadir**

| Angle | 0-deg |
|---|---|
| 0 | 479 |
| 5 | 751 |
| 10 | 1115 |
| 20 | 1986 |
| 30 | 1520 |
| 40 | 675 |
| 50 | 190 |
| 60 | 27 |
| 70 | 2 |
| 80 | 2 |
| 90 | 0 |

**Single Unit Footcandles 2.5' from wall**
**(distance from fixture along wall)**

| DD | • |
|---|---|
| 1' | 0.4 |
| 2' | 12.2 |
| 3' | 28.9 |
| 4' | 31.8 |
| 5' | 26.5 |
| 6' | 18.8 |
| 7' | 12 |
| 8' | 7.8 |
| 9' | 5.2 |
| 10' | 3.6 |

**Multiplier Table**

| CCT Option | 2700K | 3000K | 3500K | 4000K |
|---|---|---|---|---|
| CCT Multiplier | 0.946 | 1.000 | 1.020 | 1.042 |

Representative photometric test report for 3000K color temperature, 90CRI.
Multipliers may be used to determine relative lumen values with other color temperatures.

Powering Business Worldwide

**Eaton**
1121 Highway 74 South
Peachtree City, GA 30269
P: 770-486-4800
www.eaton.com/lighting

Specifications and dimensions subject to change without notice.

## HALO LED ICAT HOUSING for NEW CONSTRUCTION

The H750ICAT is a dedicated LED new construction housing to be used with designated HALO LED modules.The H750ICAT is designed for insulated ceilings and can be in direct contact with ceiling insulation*. This AIRTITE housing design prevents airflow between conditioned and unconditioned spaces and saves on both heating and air conditioning costs. The LED connector system provides high efficacy code compliance when used with designated HALO LED modules and trims.

HALO®

| | | |
|---|---|---|
| Catalog # | H750ICAT-ML5606927-596WB | Type: ALR-10 |
| Project | ALOFT | Revision Date: |
| Comments | | Date |
| Prepared by | Katheen Kenny, National Accounts, 678-447-5208, kathleenkenny@eaton.com | |

## DESIGN FEATURES

**Housings**
Aluminum construction for greater heat dissipation. H750 ICAT housing is gasketed to prevent airflow from heated or air conditioned spaces.

**Plaster Frame**
Galvanized steel frame. Housing adjusts in plaster frame to accommodate up to 1" ceiling thickness. Regressed locking screw for securing hanger bars. Cutouts included for easily crimping hanger bars in position

**Slide-N-Side™ Junction Box**
- Positioned to accommodate straight conduit runs.
- Seven ½" trade size conduit knockouts with true pry-out slots.
- Slide-N-Side wire traps allow non metallic sheathed cable to be installed without tools and without removing knockouts.
- Allows wiring connections to be made outside the box.
- Simply insert the cable directly into the trap after connections are made.
- Accommodates the following standard non-metallic sheathed cable type:
- U.S. #14/2, #14/3, #12/2, #12/3
- Canada: #14/2, #14/3, #12/2

**GOT NAIL! Pass -N-Thru™ Bar Hangers**

Bar Hanger features include
- Pre-installed nail easily installs in regular lumber, engineered lumber and laminated beams.
- Safety and Guidance system prevents snagging, ensures smooth, straight nail penetration and allows bar hangers to be easily removed if necessary
- Automatic leveling flange aligns the housing and allows holding the housing in place with one hand while driving nails.
- Housing can be positioned at any point within 24" joist spans
- Score lines allow tool-free shortening for 12" joists and bar hangers do not need to be removed for shortening.
- Bar hangers may be repositioned 90° on plaster frame
- Integral T-bar clip snaps onto T-bars – no additional clips are required.

**LED Module Connection**
Halo LED modules simply install with a plug-in 120V-277V rated line voltage wiring connector (UL and CSA Listed Luminaire Disconnect). This non-screw-base connection preserves the high efficacy rating and prevents use of low efficacy incandescent sources (see LED Module specifications).

**Caution**
Connection is rated for 120V and 277V input. Installer must verify LED module voltage is compatible with the applicable voltage input. If uncertain, consult a qualified electrician.

**Labels**
- UL/cUL Listed 1598 Luminaire
- CE Marking - "Conformité Européene" conformity with the Council of European Communities Directives, meeting internationally recognized compliance when used with ML56 Series LED modules
- UL/cUL Listed for Feed Through
- UL/cUL Listed for Damp Location
- UL/cUL Listed for Wet Location with select trims
- UL/cUL Listed for direct contact with insulation and combustible material*
- Rated for 20W maximum

**Qualification**
May be used with qualified Halo LED modules and designated trims for High Efficacy Luminaire Compliance:
- State of California Title 24
- International Energy Conservation Code (IECC)
- Washington State Energy Code
- New York State Energy Conservation Construction Code - AIR-TITE™ Compliant
- Certified under ASTM-E283 standard for air-tight construction

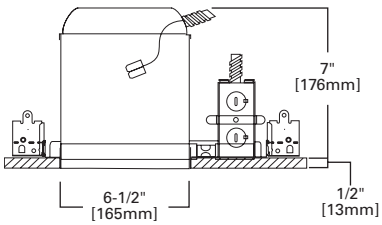


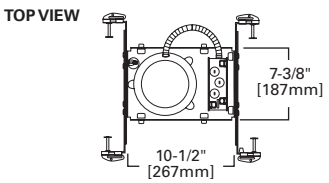

## H750ICAT

**6" New Construction IC AIR-TITE™ Housing For Halo LED Modules and Trims**
**- ML56 Series**
**- RL56 Series**
**- RA56 Series**

**High Efficacy LED Housing**

**FOR USE IN INSULATED CEILINGS**

**FOR DIRECT CONTACT WITH INSULATION***

Qualified and compliant with select trims. Refer to ENERGY STAR® Qualified Products List and CEC (T24) Appliance Database for listings.

* Not to be used in direct contact with spray foam insulation.

## ORDERING INFORMATION - RL56 SERIES

**SAMPLE NUMBER:** H750ICAT - RL560WH6927
Order housing, light module, trim and separately.

| Housing | RL56 LED - Compatible LED Retrofit Modules |
|---|---|
| **H750ICAT**= 6" Aperture, New Construction, IC AIR-TITE™, High Efficacy LED Housing | **80 CRI**<br>**RL560WH6827**= 5"/6" Retrofit Baffle - Trim LED Module, 80CRI, 2700K, Matte White<br>**RL560SN6827**= 5"/6" Retrofit Baffle - Trim LED Module, 80CRI, 2700K, Satin Nickel<br>**RL560WH6830**= 5"/6" Retrofit Baffle - Trim LED Module, 80CRI, 3000K, Matte White<br>**RL560SN6830**= 5"/6" Retrofit Baffle - Trim LED Module, 80CRI, 3000K, Satin Nickel<br>**RL560WH6835**= 5"/6" Retrofit Baffle - Trim LED Module, 80CRI, 3500K, Matte White<br><br>**90 CRI**<br>**RL560WH6927**= 5"/6" Retrofit Baffle - Trim LED Module, 90CRI, 2700K, Matte White<br>**RL560SN6927**= 5"/6" Retrofit Baffle - Trim LED Module, 90CRI, 2700K, Satin Nickel<br>**RL560WH6930**= 5"/6" Retrofit Baffle - Trim LED Module, 90CRI, 3000K, Matte White<br>**RL560SN6930**= 5"/6" Retrofit Baffle - Trim LED Module, 90CRI, 3000K, Satin Nickel<br>**RL560WH6935**= 5"/6" Retrofit Baffle - Trim LED Module, 90CRI, 3500K, Matte White |

## ORDERING INFORMATION - RA56 SERIES

**SAMPLE NUMBER:** H750ICAT - RA5606927WH
Order housing, light module, trim and separately.

| Housing | RA56 LED - Compatible LED Retrofit Modules |
|---|---|
| **H750ICAT**= 6" Aperture, New Construction, IC AIR-TITE™, High Efficacy LED Housing | **Very Wide Flood - VWFL Models**<br>**RA5606927WH**= 5"/6" LED Adjustable Gimbal, 90CRI, 2700K, White, Very Wide Flood<br>**RA5606930WH**= 5"/6" LED Adjustable Gimbal, 90CRI, 3000K, White, Very Wide Flood<br><br>**Narrow Flood - NFL Models**<br>**RA5606927NFLWH**= 5"/6" LED Adjustable Gimbal, 90CRI, 2700K, White, Narrow Flood<br>**RA5606930NFLWH**= 5"/6" LED Adjustable Gimbal, 90CRI, 3000K, White, Narrow Flood |

## ORDERING INFORMATION - ML56 SERIES

**SAMPLE NUMBER:** H750ICAT - ML5606830 - 693WB
Order housing, light module, trim and separately.

| Housing | ML56 LED Light Modules | ML56 LED Trims | ML56 System Accessories |
|---|---|---|---|
| **H750ICAT**= 6" Aperture, New Construction, IC AIR-TITE™, High Efficacy LED Housing | **600 Series / 80 CRI**<br>**ML5606827**= 5"/6" LED Retrofit Downlight Light Module, 600 lumen, 80CRI, 2700K<br>**ML5606830**= 5"/6" LED Retrofit Downlight Light Module, 600 lumen, 80CRI, 3000K<br>**ML5606835**= 5"/6" LED Retrofit Downlight Light Module, 600 lumen, 80CRI, 3500K<br>**ML5606840**= 5"/6" LED Retrofit Downlight Light Module, 600 lumen, 80CRI, 4000K<br><br>**600 Series / 90 CRI**<br>**ML5606927**= 5"/6" LED Retrofit Downlight Light Module, 600 lumen, 90CRI, 2700K<br>**ML5606930**= 5"/6" LED Retrofit Downlight Light Module, 600 lumen, 90CRI, 3000K<br>**ML5606935**= 5"/6" LED Retrofit Downlight Light Module, 600 lumen, 90CRI, 3500K<br>**ML5606940**= 5"/6" LED Retrofit Downlight Light Module, 600 lumen, 90CRI, 4000K<br><br>**900 Series / 80 CRI**<br>**ML5609827**= 5"/6" LED Retrofit Downlight Light Module, 900 lumen, 80CRI, 2700K<br>**ML5609830**= 5"/6" LED Retrofit Downlight Light Module, 900 lumen, 80CRI, 3000K<br>**ML5609835**= 5"/6" LED Retrofit Downlight Light Module, 900 lumen, 80CRI, 3500K<br>**ML5609840**= 5"/6" LED Retrofit Downlight Light Module, 900 lumen, 80CRI, 4000K<br><br>**900 Series / 90 CRI**<br>**ML5609927**= 5"/6" LED Retrofit Downlight Light Module, 900 lumen, 90CRI, 2700K<br>**ML5609930**= 5"/6" LED Retrofit Downlight Light Module, 900 lumen, 90CRI, 3000K<br>**ML5609935**= 5"/6" LED Retrofit Downlight Light Module, 900 lumen, 90CRI, 3500K<br>**ML5609940**= 5"/6" LED Retrofit Downlight Light Module, 900 lumen, 90CRI, 4000K<br><br>**1200 Series / 80 CRI**<br>**ML5612827**= 5"/6" LED Light Module, 1200 lumen, 80CRI, 2700K<br>**ML5612830**= 5"/6" LED Light Module, 1200 lumen, 80CRI, 3000K<br>**ML5612835**= 5"/6" LED Light Module, 1200 lumen, 80CRI, 3500K<br>**ML5612840**= 5"/6" LED Light Module, 1200 lumen, 80CRI, 4000K<br><br>**1200 Series / 90 CRI**<br>**ML5612927**= 5"/6" LED Light Module, 1200 lumen, 90CRI, 2700K<br>**ML5612930**= 5"/6" LED Light Module, 1200 lumen, 90CRI, 3000K<br>**ML5612935**= 5"/6" LED Light Module, 1200 lumen, 90CRI, 3500K<br>**ML5612940**= 5"/6" LED Light Module, 1200 lumen, 90CRI, 4000K | **690 Series - 6" LED Trims**<br>**Non-Conductive "Dead Front" Baffles**<br>**691WB**=6" LED Trim, Polymer "Dead-Front", Shallow White Baffle & Flange (For use with 600 Series LED Light Modules only)<br><br>**Reflectors**<br>**692SC**=6" LED Downlight Trim, Specular Reflector & White Flange<br>**692H**=6" LED Downlight Trim, Haze Reflector & White Flange<br>**692W**=6" LED Downlight Trim, White Reflector & Flange<br><br>**Baffles**<br>**693WB**=6" LED Downlight Trim, White Micro-Step Baffle & Flange<br>**693BB**=6" LED Downlight Trim, Black Micro-Step Baffle & Flange<br>**693SNB**=6" LED Downlight Trim, Satin Nickel Micro-Step Baffle & Flange<br>**693TBZB**=6" LED Downlight Trim, Tuscan Bronze Micro-Step Baffle & Flange<br><br>**Semi-Regressed Eyeballs**<br>**694WB**=6" LED Directional Trim, White Eyeball, Baffle & Flange<br>**694SNB**=6" LED Directional Trim, Satin Nickel Eyeball, Baffle & Flange<br>**694TBZB=**6" LED Directional Trim, Tuscan Bronze Eyeball, Baffle & Flange<br><br>**Wall Wash**<br>**695WW**=6" LED Downlight Trim, Wall Wash with Specular Kick Reflector & White Flange<br><br>**Shallow Baffle**<br>**696WB=**6" LED Trim, White Shallow Baffle & Flange | **ML56CLIP=** 6" Friction Clip Kit - For use with non-torsion spring housings. 6" clips included.<br>**WW6955C=** Wall Wash Insert - Specular Kick Reflector for 695WW (1 included with trim). For double wall washing or replacement.<br>**TRM690WH=** 6" LED Oversize Trim Ring for use with 59* series trims, White 6.9" I.D., 9.5" O.D.<br>Ring slips over LED trim. Inset design allows 6" trim to fit into oversize ring for an even trim surface<br>**EBA560PK=** Replacement screwbase adapter to LED disconnect with cap<br><br>**ML56-1200 Series Beam Forming Optic Media**<br>**BFR56NFL=**Beam forming reflector kit, narrow flood, 25° nominal<br>**BFR56MH=**Media holder, accepts one 3.45" lens. Requires BFR56NFL & L345SF, order separately.<br>**L345SF=**3.45" diameter soft focus lens. Requires BFR56NFL and BFR56MH, order separately. |



© 2014 Eaton
All Rights Reserved
Printed in USA
Publication No. ADV141509
June 2014

Specifications and dimensions subject to change without notice.

# HALO

## DESCRIPTION

596 Series LED Trim – 5-Inch Aperture Shallow Baffle - is an integral element in the Halo ML56 LED Downlighting System.
ML56 LED System is a series of modular LED Light Modules for use with dedicated 5" or 6" ML56 LED trims. The ML56 LED trims in 5" and 6" aperture sizes are designed to fit Halo, All-Pro and others 5" or 6" recessed housings. The ML56 system is suitable for new construction, remodel or retrofit installation.

| | | |
|---|---|---|
| Catalog # | H750ICAT-ML5606927- | Type: ALR-10 |
| Project | ALOFT | Revision Date: |
| Comments | | Date |
| Prepared by | Katheen Kenny, National | |

## SPECIFICATION FEATURES

596 Series LED trim is a 5-inch aperture shallow baffle for use in shallow recessed housings. 596 Series shallow baffle is offered in White (Matte White) baffle and flange. The shallow trim height provides capability for installation into both shallow and standard 5-inch aperture recessed housings (refer to ML56 LED Light Module specifications for details).

- For use with ML56 Series LED light modules
- Shallow baffle with self-flange
- Shallow height allows use in shallow or standard housings
- Wet location shower listed with ML56 LED Light Modules
- Torsion springs pull trim and light module tight to ceiling
- ML56 downlight trims and modules make any housing AIR-TITE™ (ASTM E283)
- For use with ML56 Series LED light modules

**Compatible with ML56 LED System of LED Downlight Light Modules**

**600 Series - 80CRI, 600lm**
**5"/6" LED Retrofit Downlight Engine**
ML5606827 - 2700K
ML5606830 - 3000K
ML5606835 - 3500K
ML5606840 - 4000K

**600 Series - 90CRI, 600lm**
**5"/6" LED Retrofit Downlight Engine**
ML5606927 - 2700K
ML5606930 - 3000K
ML5606935 - 3500K
ML5606940 - 4000K

**900 Series - 80CRI, 900lm**
**5"/6" LED Retrofit Downlight Engine**
ML5609827 - 2700K
ML5609830 - 3000K
ML5609835 - 3500K
ML5609840 - 4000K

**900 Series - 90CRI, 900lm**
**5"/6" LED Retrofit Downlight Engine**
ML5609927 - 2700K
ML5609930 - 3000K
ML5609935 - 3500K
ML5609940 - 4000K

**1200 Series - 80CRI, 1200lm**
**5"/6" LED Retrofit Downlight Engine**
ML5612827 - 2700K
ML5612830 - 3000K
ML5612835 - 3500K
ML5612840 - 4000K

**1200 Series - 90CRI, 1200lm**
**5"/6" LED Retrofit Downlight Engine**
ML5612927 - 2700K
ML5612930 - 3000K
ML5612935 - 3500K
ML5612940 - 4000K

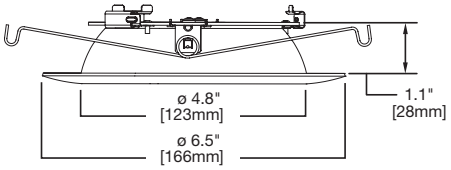

**596WB**

# 596 Series LED Trim

**5-Inch Shallow Baffle**

**For use with Halo ML56 LED System Light Modules**

Shower Light

air-tite trim

## ORDERING INFORMATION

**SAMPLE NUMBER:** 596WB

| Trim | Finish | Accessory |
|---|---|---|
| **596**= 5" Shallow Baffle | **WB**=White Baffle, White Flange | **TRM590WH=** 5" LED Oversize Trim Ring for use with 59* series trims, White 6.3" I.D., 7.5" O.D. Ring slips over LED trim. Inset design allows 5" trim to fit into oversize ring for an even trim surface |



© 2014 Eaton
All Rights Reserved
Printed in USA
Publication No. ADV141665
June 2014

Specifications and dimensions subject to change without notice.

## DESCRIPTION

The EUX series exits are designed for architectural excellence and minimal presence. The ordering and installation processes are greatly simplified as all housing and lens alternatives are included. Fixture options include housing color, red or green letters and Eagle Eye self-diagnostics. Long life LED electronics coupled with nickel cadmium battery technology greatly reduces maintenance.

# Sure-Lites

| | | |
|---|---|---|
| **Catalog #** | EUX7(R/G)SD | **Type** ALX-01 |
| **Project** | Aloft | Revision Date: |
| **Comments** | | **Date** |
| **Prepared by** | Kathleen Kenny | |

## SPECIFICATION FEATURES

**Electronics**
- Dual Voltage Input, 120/277 VAC, 60 Hz
- EZ key external battery disconnect
- 10°C to 40°C (50°F to 104°F) operating range
- Eagle Eye Self-Diagnostic System option
- Long life LED light source
- Fully recharged in 24 hours
- Solid-state Voltage Limited Charger
- Solid-state Switching
- Brownout Circuit
- Low-Voltage Disconnect
- Overload/Short Circuit Protection
- Test Switch/Power Indicator Light
- Photocell Test Switch (requires accessory laser for activation)

**Battery**
- Sealed nickel cadmium
- Maintenance free
- 24 hour full recharge time

**Housing Construction**
- All aluminum housing
- All mounting options are standard: surface, recessed, end, ceiling and wall
- Available in brushed aluminum, white or black
- Halo Got Nail hangar bars included for recessed applications
- Convenient 1/2" knockouts on top and end of fixture

**Trim/Lens**
- High impact acrylic panel
- Available with red or green letters
- Single and double sided lenses included
- Clear, mirror insert and white insert options included
- Field installed and NFPA 101 compliant chevron directional indicators included
- No Tools required for "snap in" installation
- Pre-specified chevron lens kits available for an enhanced aesthetic.

**Code Compliance**
- UL 924 listed
- Life Safety NFPA 101
- NEC/OSHA

**Warranty**
- Fixture: 5-year
- Battery: 7-year pro-rata

## EUX SERIES

EDGELIT EXIT
SELF POWERED EMERGENCY
LED LAMPS
UNIVERSAL EXIT
**EXIT LIGHTING**

## ORDERING INFORMATION

**SAMPLE NUMBER:** EUX6R

| Series | Lens Color | Housing Finish | Self-Diagnostics |
|---|---|---|---|
| **EUX6**=AC Only LED<br>**EUX7**=Self-Powered LED<br><br>**EUXFAI**=Fire Alarm Interface Module | **R**=Red<br>**G**=Green | _=Brushed Aluminum<br>**WH**=White<br>**BK**=Black | _=None<br>**SD**=Self-Diagnostics (Self-Powered Only) |

## ENERGY DATA

**LED Exits - Red**
Input Power:
120V = 0.9W
277V = 1.1W

Input Current (Max.):
120V = 0.08A
277V = 0.08A

Power Factor:
120V = 0.11
277V = 0.08

**LED Exits - Green**
Input Power:
120V = 1.3W
277V = 1.5W

Input Current (Max.):
120V = 0.08A
277V = 0.08A

Power Factor:
120V = 0.2
277V = 0.1

## DIMENSIONS

### SURFACE CEILING MOUNT

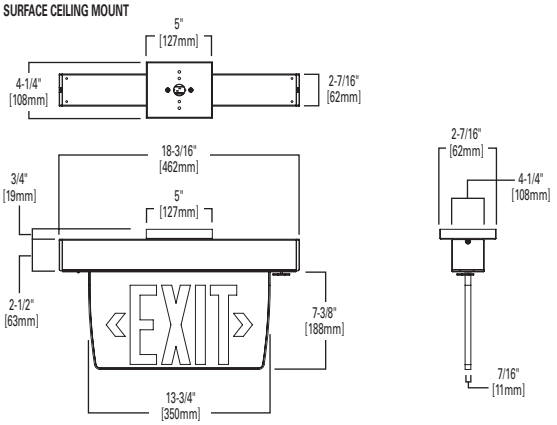


### SURFACE WALL MOUNT

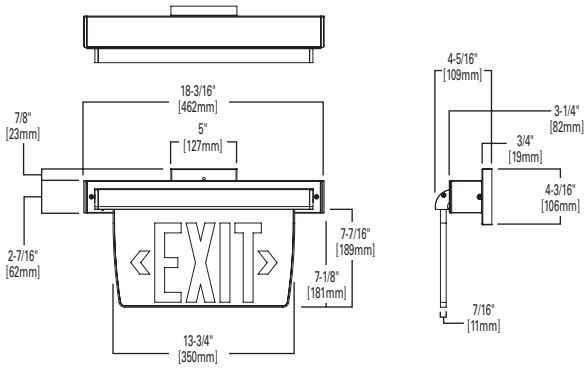


### END MOUNT

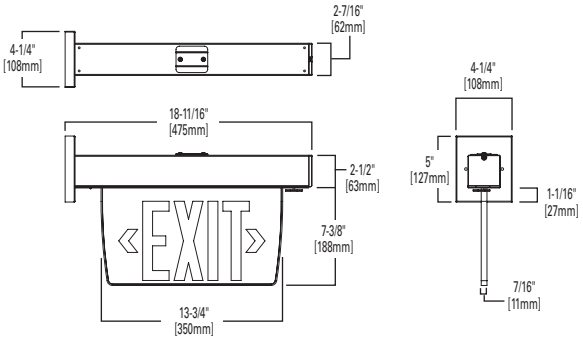


### RECESSED CEILING MOUNT

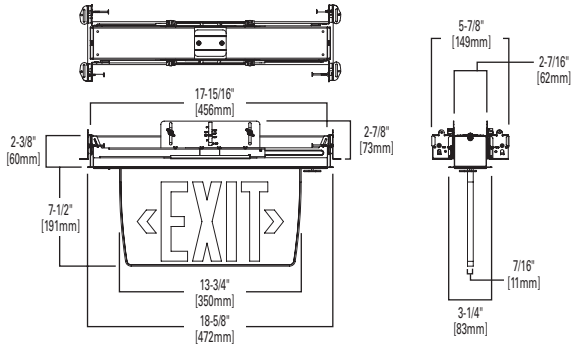


### RECESSED WALL MOUNT

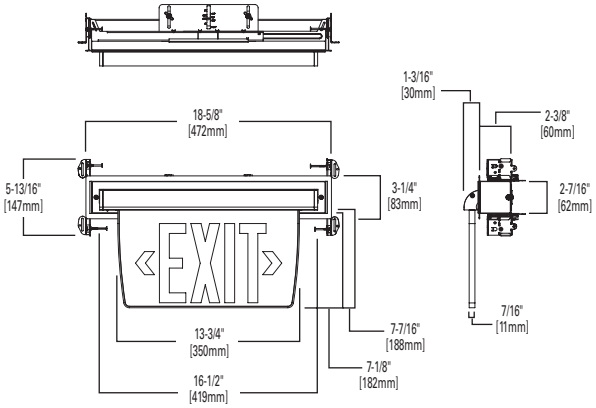


### WITH OPTIONAL 6" PENDANT KIT

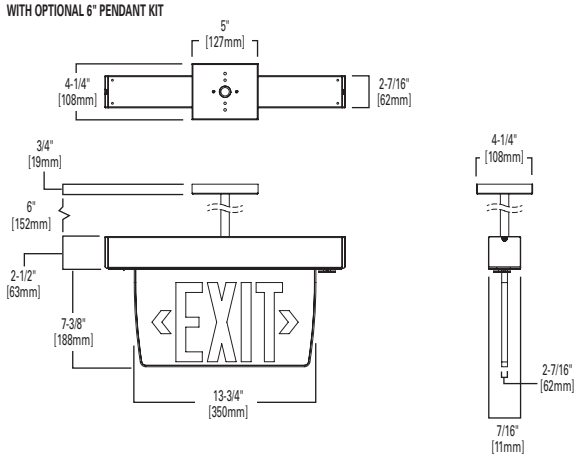

**Lamps**
Optimized for energy efficiency and aesthetic appearance, the EUX series Exit uses super bright, long life LED lamps to illuminate the exit lens.

**Housing**
Die cast and extruded aluminum housing that mounts in any application. Available in white, black or brushed aluminum finishes. Housing has conduit knockouts on top and side for easy AC wiring connections. Fully adjustable Halo Got Nail hangar bars make recessed installation easy. EUX is fully compatible with grid or hard ceilings as well as 2 x 4 wall constructions.

**Trim/Lens**
The EUX lens kit is truly universal and includes the materials needed to field construct all options. The high-impact, clear acrylic lens panel comes with three pieces to allow configuration of single or double sided options on the job site. In addition to the clear option, both mirror and white inserts are standard, along with NFPA 101 compliant chevrons. The lens installation requires no tools and snaps easily into place.
Pre-specified chevron lens kits (arrow right/left, double arrow) are also available as an option. This kit also includes white and mirror inserts, is fully NFPA compliant and requires no tools for installation.

**EZ Key Power Disconnet (self-powered only)**
The Patented EZ key is an external battery disconnect that allows the product to be shipped with the battery connected internally. This prevents battery drain during the construction cycle to insure that the battery isn't damaged and is fully charged for inspection. EZ Key also saves the labor of internally connecting the battery after construction is complete.

**Solid-State Charger (self-powered only)**
Supplied with a 120/277 VAC, voltage regulated solid-state charger. Immediately upon restoration of AC current after a power failure, the charger provides a high charge rate. Solid-state circuitry recharges the battery following a power failure in accordance with UL 924.

**Brownout Circuit (self-powered only)**
The brownout circuit on Sure-Lites' exits monitors the flow of AC current to the exit and activates the emergency lighting system when a predetermined reduction of AC power occurs. This dip in voltage will cause most ballasted fixtures to extinguish causing loss of normal lighting even though a total power failure has not occurred.

**Solid-State Transfer (self-powered only)**
The EUX Series exit incorporates solid state switching which eliminates corroded and pitted contacts or mechanical failures associated with relays. The switching circuit is designed to detect a loss of AC voltage and automatically energizes the LED lamps. Upon restoration of AC power, the emergency circuit will switch off and the charger will automatically fully recharge the battery within 24 hours.

**Test Switch/Power Indicator Light (self-powered only)**
Conveniently located combination Test Switch/ Power Indicator Light allows for manual verification of proper operation of the transfer circuit and emergency lamps.

**Photocell Test Switch**
Allows verification of proper operation of the transfer circuit and emergency lamps with a laser pointer (laser is sold as an accessory). The emergency lamps will test for 30 seconds when activated.

**Eagle Eye™ Self-Diagnostics**
The Eagle Eye self-diagnostic software will automatically perform all tests required by UL924, and NFPA101. The system indicates the status of the emergency light at all times using the LED indicator. A 90 minute battery power (emergency mode) simulation t once every 12 months. A 30 second battery power simulation test will occur every 30 days. The Solid-State microprocessor based system has the ability to accurately detect and warn of system failures, plus it incorporates all of the standard electronic features that sets Sure-Lites apart from its competition. Eagle Eye self diagnostic software automatically performs all testing required by the NFPA 101 Life Safety Code and systematically calibrates itself in the field, reducing installation labor and eliminating manual calibration errors.

**Sealed Nickel Cadmium Battery (self-powered only)**
Sure-Lites sealed nickel cadmium batteries are maintenance-free with a life expectancy of 7 years. The sealed rechargeable nickel cadmium battery offers high discharge rates and stable performance over a wide range of temperatures.

**Warranty**
All Sure-Lites' products are backed by a firm five-year warranty against defects in material and workmanship. Maintenance-free, longlife, sealed nickel cadmium batteries carry a seven-year pro-rata warranty.



**Eaton**
1121 Highway 74 South
Peachtree City, GA 30269
P: 770-486-4800
www.eaton.com/lighting

Specifications and dimensions subject to change without notice.

Elevators

Issue Date: 28 JUL 2017

Revision Date: 14 FEB 2019

| | |
|---|---|
| Item Name | Hydrolic or Machine Roomless Elevator - Passenger |
| Product: | 2500 lbs |
| Manufacturer: | See manufacturer list below for approved manufacturers |
| Interior Cab Dimensions: | Passenger Cab: 6'-8" W x 4'-3" D x 9'-0" H |
| Doors: | Stainless Steel |
| Door Frames: | Stainless steel only at main level. Upper floors to be painted to match guestroom door frames. |
| Control Panel: | Halo Lit buttons. White light |
| Ceiling: | Refer to spec ELE-001.2 for specification details. |
| Handrail: | Refer to spec ELE-001.2 for specification details. |
| Walls: | Refer to spec ELE-001.2 for specification details. |
| Base: | Refer to spec ELE-001.2 for specification details. |
| Signage: | Provide engraved sign "Do Not use Elevator in case of Fire - Use Stairs" within cab and beside elevator entrance on each floor. Provide engraved sign "Elevator not to be used by construction personnel" and " Elevator permit on file with manager" in cab. |
| Note: | Emergency light and telephone to be provided |
| Note: | Provide stainless steel license holder in each elevator cab to suit certificate issued. Design holder with non-visible tamper-proof fastenings. |
| Note: | Provide pads and hooks - for side and rear walls |
| Note: | Provide reinforced structure at ceiling in conformance with ASME A-17.1. |
| Lead Time: | Varies. Verify with selected manufacturer |
| Warranty: | Varies. Verify with selected manufacturer |

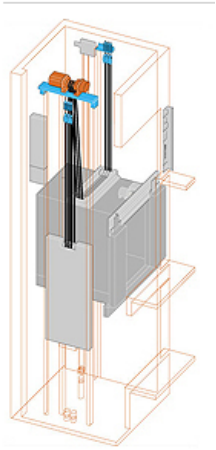

## SPECIAL INSTRUCTIONS

1.

MANUFACTURER

Otis Elevator Co. 800.441.6847

ALTERNATE MANUFACTURER 1

Default

ALTERNATE MANUFACTURER 2

ThyssenKrupp Elevator 800-824-9666

Default

ALTERNATE MANUFACTURER 3

AREAS

Public Space

Elevators

Issue Date: 14 FEB 2019

Revision Date:

| | |
|---|---|
| Item Name | Custom Elevator Interior Fit Out - Passenger |
| Product: | 79754 |
| Manufacturer: | Snapcab |
| Ceiling: | Floating ceiling - stainless steel panels with satin finish and LED downlights (3100K). Elevator manufacturer to provide LED rope light (Color: white) around the peimeter of the floating ceiling panels. Lighting to provide minimum illumination in the car in accordance with the latest edition of ANSI/ASTM A-17.1Elevator Code. |
| Handrail: | Flat tubular stainless steel No.4 finish handrail on back and side walls. ADA profile to be spaced 1 1/2" from the car wall at 32" above car floor. |
| Walls: | Gorilla Glass with custom graphic to match image V-302. Refer to GL-003 for mirror specification details.<br>Gorilla Glass Size (maximum): 1390 mm x 1270 mm<br>Gorilla Glass Thickness: 1.5 mm glass thickness<br>Standard Testing: Meets ASTM standards for flat glass.<br>With qualifed panel backer, meets U.S. standards for indoor use, including CPSC 16, CFR 1201, ANSI Z97.1-2009, ASTM E84,<br>ANSI maximum impact Class A, and CPSC maximum impact level Cat II. |
| Base: | Stainless steel |
| Lead Time: | 9-12 Weeks |
| Warranty: | 3 Years |

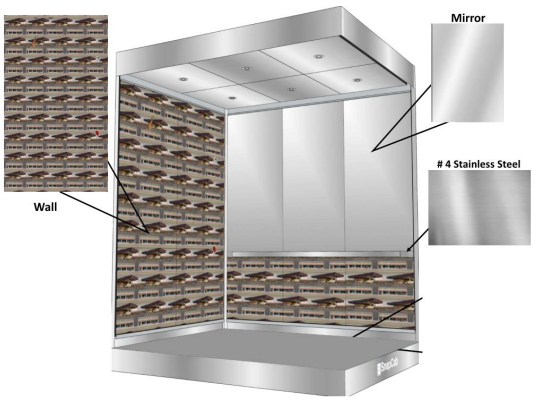


## SPECIAL INSTRUCTIONS

1.

MANUFACTURER

Snapcab 888-766-7834

Joe Fay 267-884-0446 joe.fay@snapcab.com

ALTERNATE MANUFACTURER 1

ALTERNATE MANUFACTURER 2

ALTERNATE MANUFACTURER 3

AREAS

Public Space

Elevators

Issue Date: 14 FEB 2019

Revision Date:

| | |
|---|---|
| Item Name | Custom Elevator Interior Fit Out - Service |
| Product: | 79754 |
| Manufacturer: | Snapcab |
| Ceiling: | Floating ceiling - stainless steel panels with satin finish and LED downlights (3100K). Elevator manufacturer to provide LED rope light (Color: white) around the peimeter of the floating ceiling panels. Lighting to provide minimum illumination in the car in accordance with the latest edition of ANSI/ASTM A-17.1Elevator Code. |
| Handrail: | Flat tubular stainless steel No.4 finish handrail on back and side walls. ADA profile to be spaced 1 1/2" from the car wall at 32" above car floor. |
| Walls: | Gorilla Glass with custom graphic to match image V-302. Refer to GL-003 for mirror specification details.<br>Gorilla Glass Size (maximum): 1390 mm x 1270 mm<br>Gorilla Glass Thickness: 1.5 mm glass thickness<br>Standard Testing: Meets ASTM standards for flat glass.<br>With qualifed panel backer, meets U.S. standards for indoor use, including CPSC 16, CFR 1201, ANSI Z97.1-2009, ASTM E84,<br>ANSI maximum impact Class A, and CPSC maximum impact level Cat II. |
| Base: | Stainless steel |
| Lead Time: | 9-12 Weeks |
| Warranty: | 3 Years |

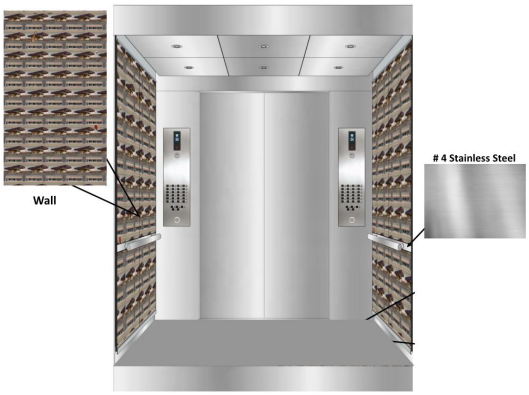


## SPECIAL INSTRUCTIONS

1.

MANUFACTURER

Snapcab 888-766-7834

Joe Fay 267-884-0446 joe.fay@snapcab.com

ALTERNATE MANUFACTURER 1

ALTERNATE MANUFACTURER 2

ALTERNATE MANUFACTURER 3

AREAS

Public Space

Elevators

# 79754 Aloft Design-Electric Grid

ELE-001.2
Revision Date:

Wall

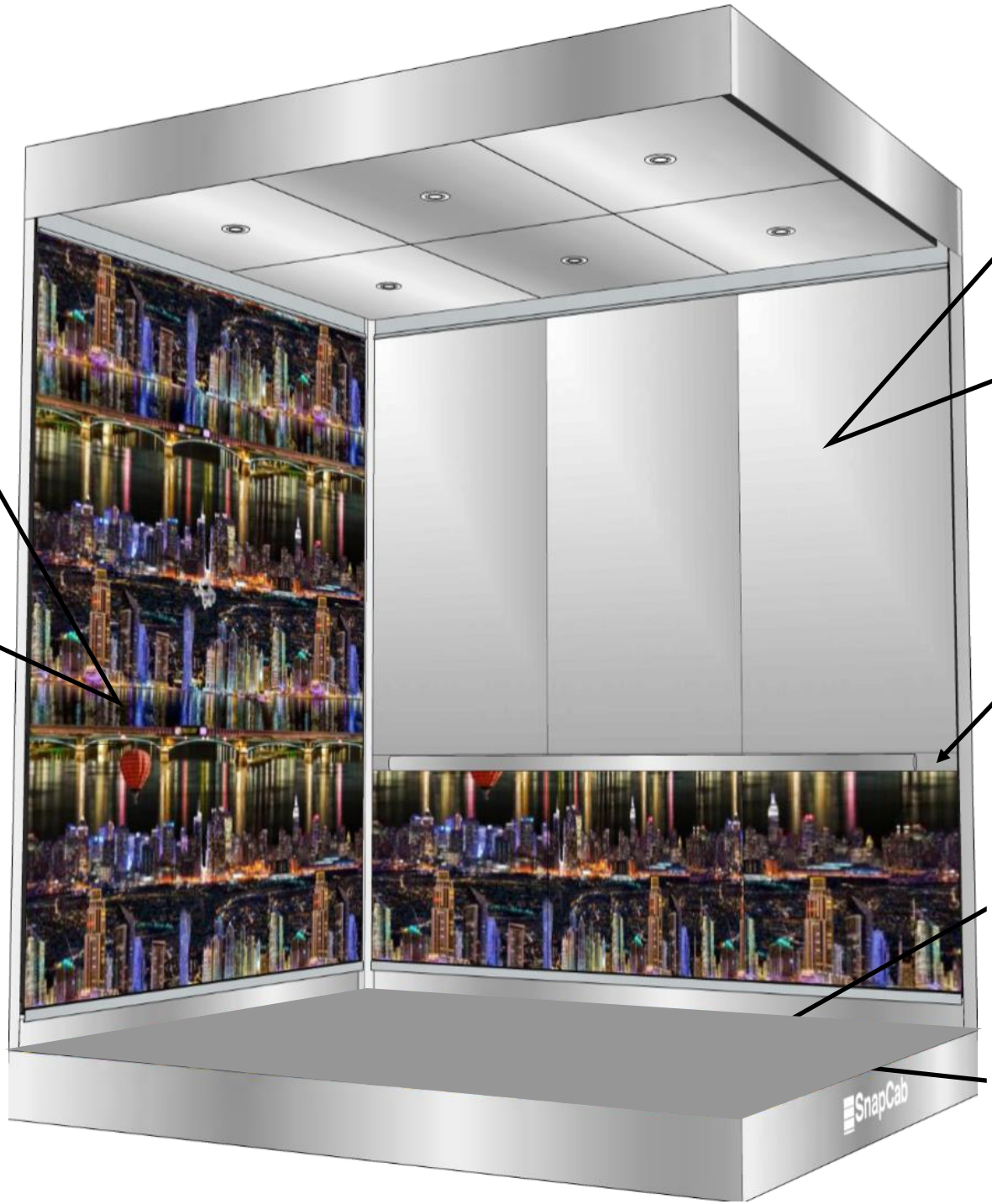


Mirror

# 4 Stainless Steel

# 79754 Aloft Design-Electric Grid-Front & Rear Opening

| ELE-002.2 |
| --- |
| Revision Date: |

**Wall**

**# 4 Stainless Steel**

# 79754 Aloft Design-Generica

Wall

Mirror

# 4 Stainless Steel

# 79754 Aloft Design-Generica– Front & Rear Opening

Wall

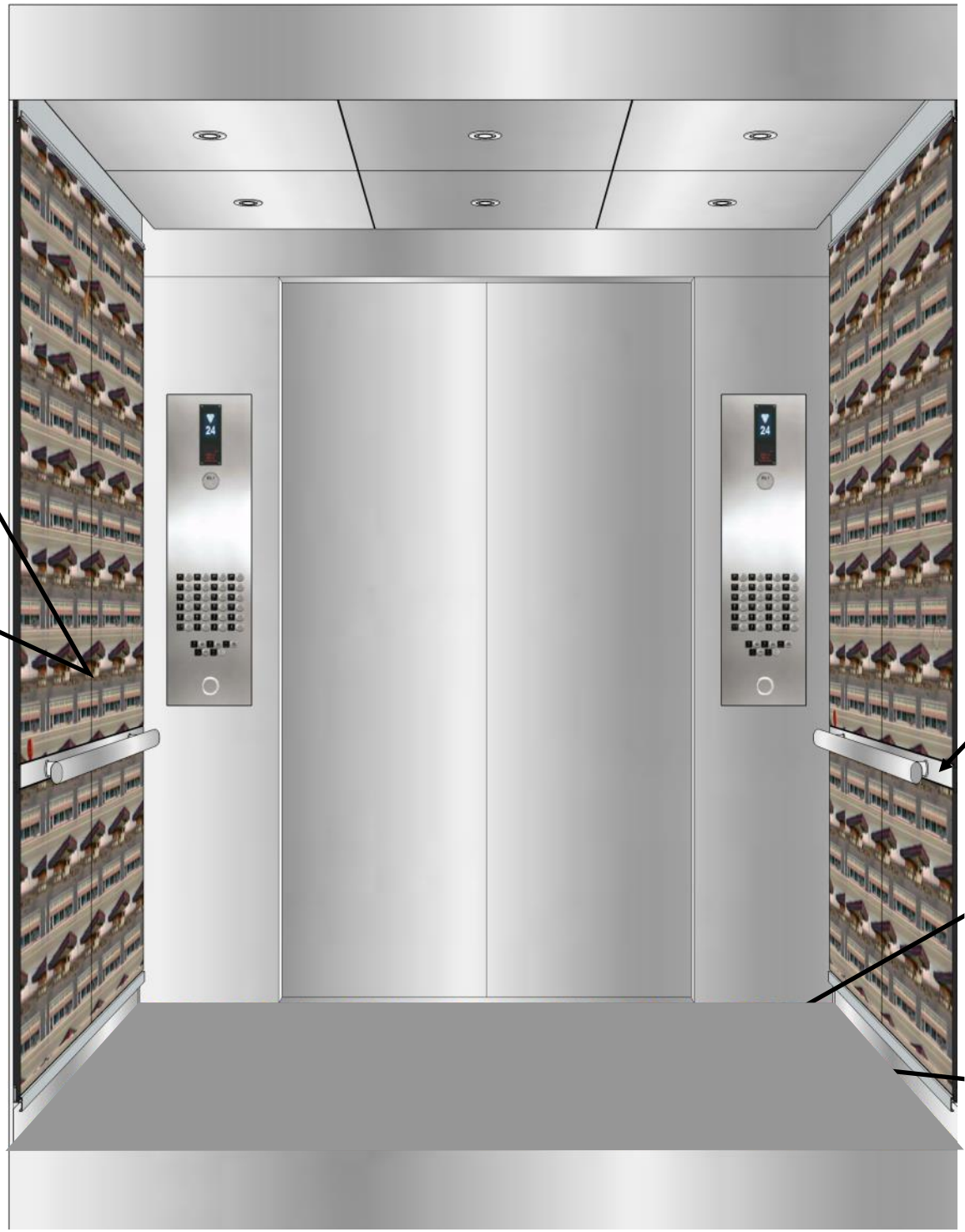

# 4 Stainless Steel

# 79754 Aloft Design-Big Green

ELE-001.2
Revision Date:

Wall

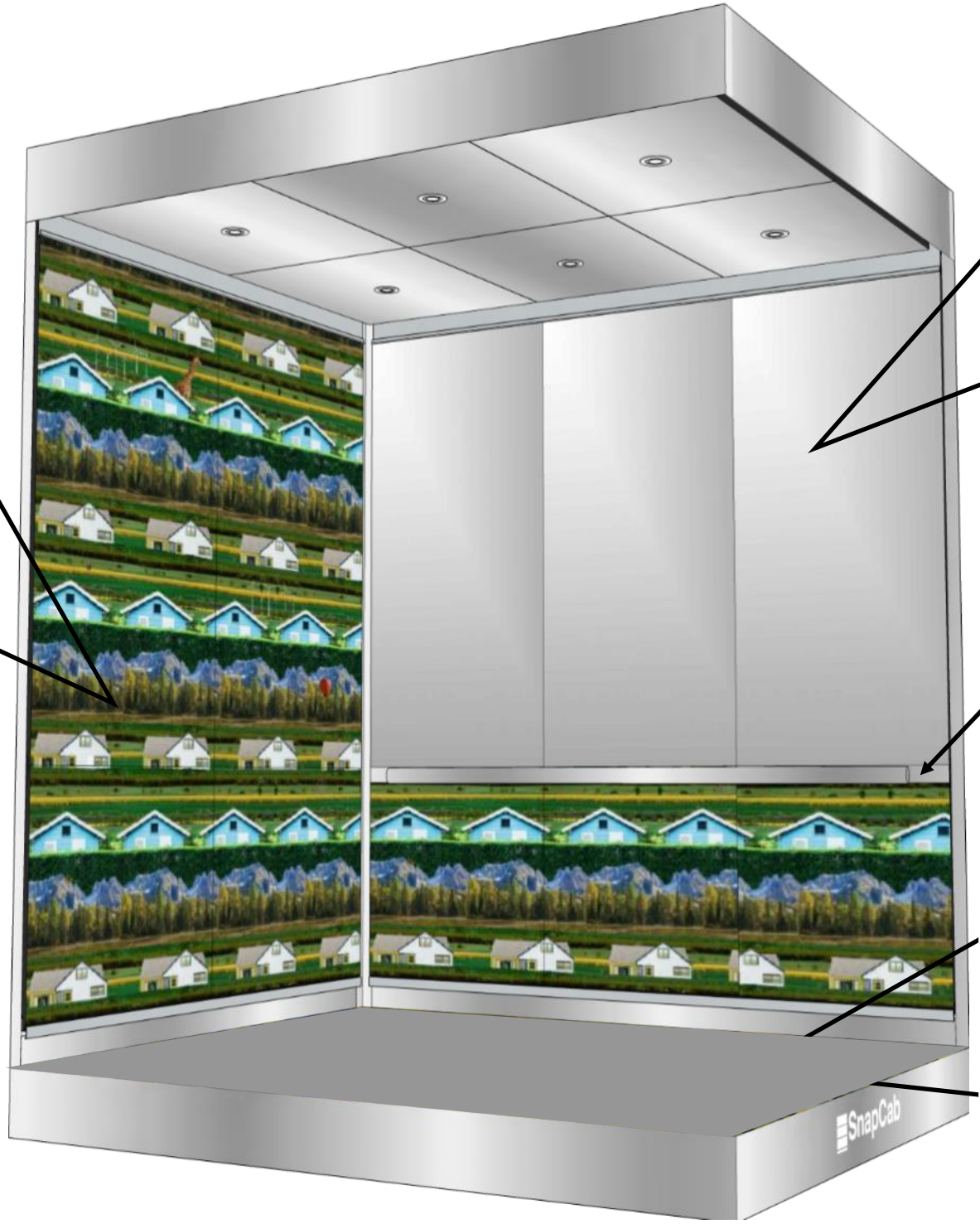


Mirror

# 4 Stainless Steel

# 79754 Aloft Design-Big Green Front & Rear Opening

ELE-002.2

Revision Date:

**Wall**

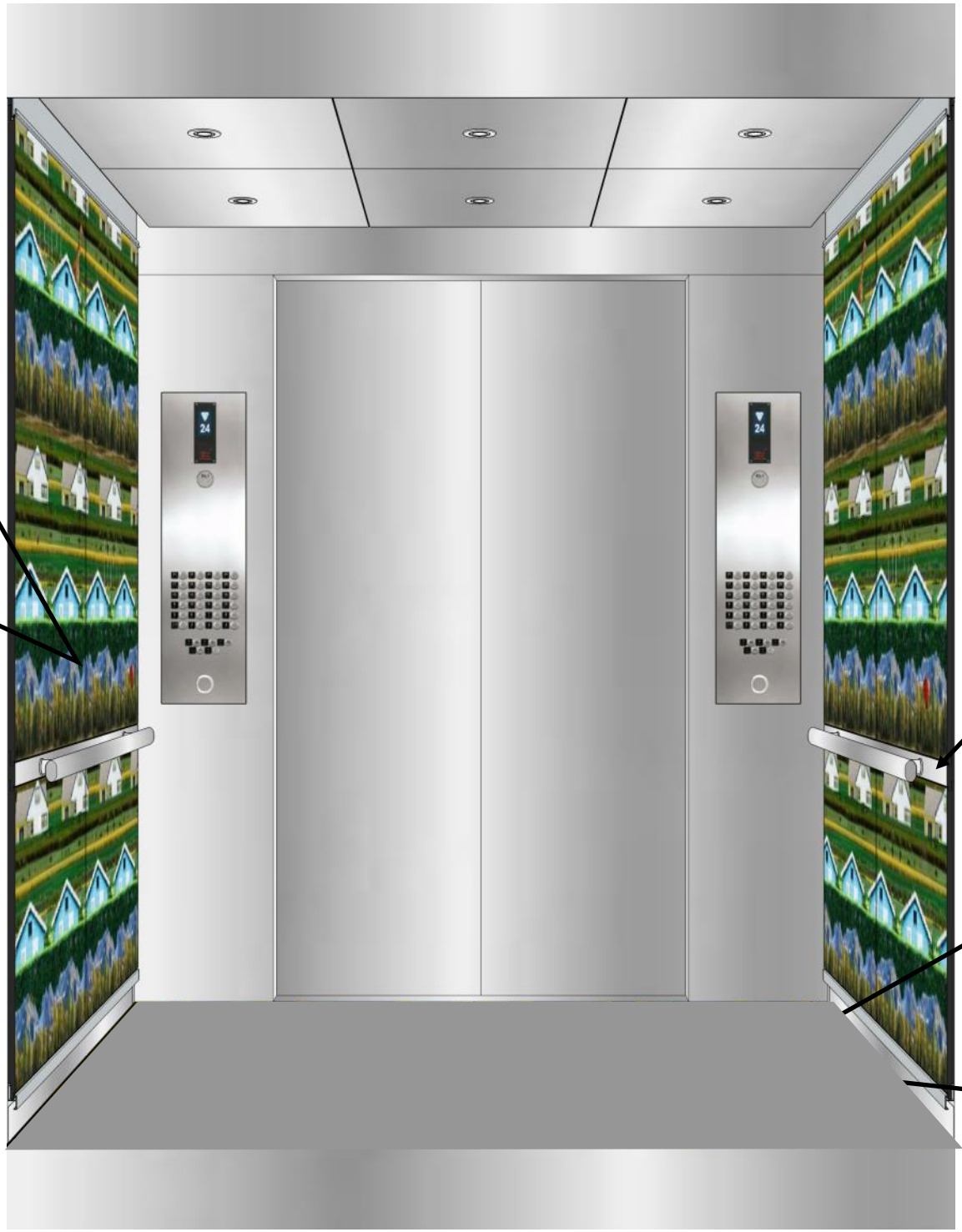

**# 4 Stainless Steel**

Linen Chute

# LC-001

Linen Chute

Issue Date: 28 JUL 2017

Revision Date:

| | |
|---|---|
| Item Name | Linen Chute |
| Description: | Linen Chute for BOH |
| Manufacturer: | Wilkinson Hi-Rise |
| Product: | Linen chute with 180" side discharge doors |
| Dimensions: | 24" Diameter |
| Color / Finish: | Standard |
| Lead Time: | To be verified |
| Warranty: | 1-Year |
| Eco-Feature(s) *as per manufacturer: | To be verified |

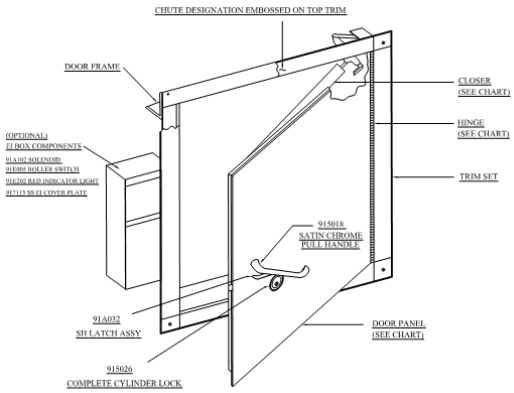


## SPECIAL INSTRUCTIONS

MANUFACTURER

Wilkinson Hi-Rise 954-342-4400

Customer Service / Sales

ALTERNATE MANUFACTURER 1

ALTERNATE MANUFACTURER 2

ALTERNATE MANUFACTURER 3

AREAS

Public Space

Chute

# Interior Insulation Finishing System

# EF-001

Revision 1

Interior Insulation Finishing System

Issue Date: 28 JUL 2017

Revision Date: 29 JAN 2018

| | |
|---|---|
| Item Name | Interior EFIS wall finish |
| Manufacturer: | Dryvit Systems, Inc. |
| Product: | Dryvit Interior Finish DS174 |
| Color: | Bright White |
| Texture: | Sandpebble |
| Primer: | N/A |
| Note: | Add clear finish @ Indoor Pool Ceiling |
| Lead Time: | 3-5 business days |
| Warranty: | 10-Year limited repair and replacement material defect warranty |
| Eco-Feature(s) *as per manufacturer: | Not Applicable |

## SPECIAL INSTRUCTIONS

MANUFACTURER

Dryvit Systems, Inc. 800-556-7752

Bob Dazel (734) 276-0404 bob.dazel@dryvit.com

ALTERNATE MANUFACTURER 1

ALTERNATE MANUFACTURER 2

ALTERNATE MANUFACTURER 3

AREAS

Public Space

Indoor Pool (Splash)

# Interior Insulation Finishing System

Cutsheets

D. Finish: An acrylic based coating, available in a variety of textures and colors, which is applied to the prepared wall surface.
E. Reinforced Base Coat: The layer consisting of fiberglass reinforcing mesh fully embedded in the base coat material applied to the outside surface of the sheathing.

F. Reinforcing Mesh: Glass fiber mesh used to reinforce the base coat and to provide impact resistance.
G. Substrate: The material to which the Dryvit coatings are applied.

**1.04 DESCRIPTION**

A. General: Dryvit Interior Architectural Coatings consist of base coat and reinforcing mesh (where specified), acrylic primer and finish, applied to various interior wall and ceiling surfaces.
B. Design Requirements
1. Acceptable surfaces for Dryvit Interior Architectural Coatings include:
a. Concrete and Masonry.
b. Gypsum Wallboard meeting ASTM C 1396.
c. Fiberglass faced gypsum meeting ASTM C 1177.
d. Fiber reinforced cement or calcium silicate boards.
2. Vapor Retarders: Use, type and location of vapor retarders within a wall assembly is the responsibility of the project designer and shall be noted on the project drawings and specifications.
C. Performance Requirements: As a minimum the Dryvit materials shall be tested in the following areas;

| TEST | TEST METHOD | CRITERIA | RESULTS |
|---|---|---|---|
| **Abrasion Resistance** | ASTM D 968 | No deleterious effects after 500 liters (528 quarts) | No deleterious effects after 1000 liters (1056 quarts) |
| **Accelerated Weathering** | ASTM G 155 Cycle 1 | No deleterious effects after 2000 hours | No deleterious effects after 5000 hours |
| | ASTM G 154 Cycle 1 (QUV) | | No deleterious effects after 5000 hours |
| **Freeze-Thaw** | ASTM E 2485 (formerly EIMA 101.01) | No deleterious effects after 60 cycles | Passed - No deleterious effects after 90 cycles |
| | ASTM C 67 modified | No deleterious effects after 60 cycles | Passed - No deleterious effects after 60 cycles |
| | ASTM E 2485/ICC-ES Proc. ICC ES (AC235) | No deleterious effects after 10 cycles | Passed - No deleterious effects after 10 cycles |
| **Mildew Resistance** | ASTM D 3273 | No growth during 28 day exposure period | No growth during 60 day exposure period |
| **Water Resistance** | ASTM D 2247 | No deleterious effects after 14 days exposure | No deleterious effects after 42 days exposure |
| **Taber Abrasion** | ASTM D 4060 | N/A | Passed 1000 cycles |
| **Salt Spray Resistance** | ASTM B 117 | No deleterious effects after 300 hours exposure | No deleterious effects after 1000 hours exposure |
| **Water Vapor Transmission** | ASTM E 96 Procedure B | Vapor permeable | EPS 5 perm-inch<br>Base Coat* 40 Perms<br>Finish** 40 Perms |
| **Tensile Bond** | ASTM C 297/E 2134 | Minimum 104 kPa (15 psi) – substrate or insulation failure | Minimum 213.6 kPa (31 psi) |
| **Surface Burning Characteristics** | ASTM E 84 | All components shall have a:<br>Flame Spread $\leq$ 25<br>Smoke Developed $\leq$ 450 | Passed |
| **Reinforcing Mesh**<br>**Alkali Resistance of Reinforcing Mesh** | ASTM E 2098 (formerly EIMA 105.01) | > 21dN/cm (120 pli) retained tensile strength after exposure | Passed |
| **EPS (Physical Properties)**<br>**Density** | ASTM C 303, D 1622 | 15.2-20.0 kg/m$^3$ (0.95-1.25 lb/ft$^3$) | Pass |
| **Thermal Resistance** | ASTM C 177, C 518 | 4.0 @ 4.4 °C (40 °F)<br>3.6 @ 23.9 °C (75 °F) | Pass<br>Pass |
| **Water Absorption** | ASTM C 272 | 2.5 % max. by volume | Pass |
| **Oxygen Index** | ASTM D 2863 | 24% min. by volume | Pass |
| **Compressive Strength** | ASTM D 1621 Proc. A | 69 kPa (10 psi) min. | Pass |
| **Flexural Strength** | ASTM C 203 | 172 kPa (25 psi) min. | Pass |
| **Flame Spread** | ASTM E 84 | 25 max. | Pass |
| **Smoke Developed** | | 450 max. | Pass |

* Base Coat perm value based on Dryvit Genesis®
** Finish perm value based on Dryvit Quarzputz®

**1.05 SUBMITTALS**

A. Product Data – The contractor shall submit to the owner/architect manufacturer's product data sheets describing products, which will be used on this project.

B. Samples – The contractor shall submit to the owner/architect two samples of each finish, texture, and color to be used on the project. The same tools and techniques proposed for the actual installation shall be used to prepare the samples. Samples shall be of sufficient size to accurately represent each color and texture to be utilized on the project.

**1.06 QUALITY ASSURANCE**

A. Qualifications

1. Manufacturer: Shall be Dryvit Systems, Inc. All materials shall be manufactured or sold by Dryvit and shall be purchased from Dryvit or its authorized distributor.
   a. Materials shall be manufactured at a facility covered by a current ISO 9001:2008 and ISO 14001:2004 certification. Certification of the facility shall be done by a registrar accredited by the American National Standards Institute, Registrar Accreditation Board (ANSI-RAB).
2. Contractor*: Shall be knowledgeable in the proper installation of the Dryvit materials and shall be experienced and competent in the installation of the Dryvit Finish System for Interiors. Additionally the contractor shall possess a current trained contractor certificate from Dryvit for any of its Exterior Insulation and Finish Systems.

**1.07 DELIVERY, STORAGE, AND HANDLING**

A. All Dryvit materials shall be delivered to the job site in the original, unopened packages with labels intact.

B. Upon arrival, materials shall be inspected for physical damage, freezing, or overheating. Questionable materials shall not be used.

C. Materials shall be stored at the job site in a cool, dry location, out of direct sunlight, protected from weather and other damage. Minimum storage temperature shall be 7 °C (45 °F) for Color Prime™, 10 °C (50 °F) for Ameristone, and 4 °C (40 °F) for all other products.

**1.08 PROJECT CONDITIONS**

A. Environmental Requirements

1. At the time of application, the air and wall surface temperatures shall be minimum 7 °C (45 °F) for Color Prime, 10 °C (50 °F) for Ameristone, and 4 °C (40 °F) for all other products. These temperatures shall be maintained, with adequate air circulation, for a minimum of 24 hours thereafter, or until the products are dry.

B. Existing Conditions – The contractor shall have access to electric power, clean water, and a clean work area at the location where the Dryvit materials are to be applied.

**1.09 SEQUENCING AND SCHEDULING**

A. Installation of the Dryvit Interior Architectural Coatings shall be coordinated with other construction trades.

B. Sufficient manpower and equipment shall be employed to ensure a continuous operation, free of cold joints, scaffold lines, texture variations, etc.

**1.10 LIMITED MATERIALS WARRANTY**

A. Dryvit Systems, Inc. shall provide a written limited materials warranty against defective material upon written request. Dryvit shall have no liability for the application of the materials. Dryvit shall make no other warranties, expressed or implied. Dryvit is not liable for incidental or consequential damages.

**1.11 DESIGN RESPONSIBILITY**

A. It is the responsibility of both the specifier and the purchaser to determine, if a product is suitable for their intended use. The designer selected by the purchaser shall be responsible for all decisions pertaining to design, detail, structural capability, attachment, details, shop drawings, and the like. Dryvit has prepared guidelines in the form of specifications and product sheets to facilitate the design process only. Dryvit is not liable for any errors or omissions in design, detail, structural capability, attachment details, shop drawings, or the like, whether based upon the information prepared by Dryvit or otherwise, or for any changes which purchases, specifiers, designers, or their appointed representatives may make to Dryvit's published comments.

**1.12 MAINTENANCE**

A. Maintenance and repair shall follow the procedures noted in Dryvit Outsulation® System Application Instructions, DS204.

B. All Dryvit products are designed to minimize maintenance. However, as with all building products, depending on location, some cleaning may be required. See Dryvit publication DS152 on Cleaning and Recoating.

**PART II - PRODUCT**

**2.01 MANUFACTURER**

A. All components of the Dryvit Interior Architectural Coatings shall be obtained from Dryvit or its authorized distributors.

**2.02 MATERIALS**

A. Portland Cement: Shall be Type I, I-II or II, meeting ASTM C 150, white or gray in color, fresh and free of lumps.
B. Water: Shall be clean and free of foreign matter.

**2.03 COMPONENTS**

A. Base Coat:
1. Cementitious: A liquid polymer-based material, which is field mixed in a 1:1 ratio by weight with Portland Cement.
   a. Shall be Genesis or Primus®.
2. Noncementitious: A factory mixed, fully formulated, water based product.
   a. Shall be NCB™.
3. Ready mixed: A dry blend cementitious, co-polymer based product, field mixed with water.
   a. Shall be Primus® DM, Genesis® DM, Genesis® DMS.

B. Reinforcing Mesh: When specified, shall be a balanced open weave, glass fiber fabric treated for compatibility with other System materials.
1. Shall be Dryvit Standard Mesh weighing 146 g/m$^2$ (4.3 oz/yd$^2$).
   a. It shall be colored blue for product identification bearing the Dryvit logo.

C. Primer (when specified):
1. Shall be: Color Prime™ a pigmented, acrylic based primer used to improve adhesion and uniformity of finish color.

D. Dryvit Finish: Shall be the type, color and texture as selected by the owner/architect and shall be one or more of the following:
1. Standard DPR (Dirt Pickup Resistance): Water based, acrylic coatings with integral color and texture and formulated with DPR chemistry:
   a. Quarzputz DPR: Open-texture pattern.
   b. Sandblast® DPR: Medium texture.
   c. Freestyle® DPR: Fine texture.
   d. Sandpebble® DPR: Pebble texture.
   e. Sandpebble® Fine DPR: Fine pebble texture.
   f. Sandblast® NTX (available only from Dryvit's California plant)
   g. Sandpebble® Fine NTX (available only from Dryvit's California and Oklahoma plants)
2. E Finishes™: Water-based, lightweight acrylic coatings with integral color and texture and formulated with DPR chemistry:
   a. Quarzputz® E
   b. Sandpebble® E
   c. Sandpebble® Fine E
   d. Mojave E™
3. Specialty Finishes
   a. Ameristone™: Multi colored quartz aggregate.
   b. Stone Mist®: Ceramically colored quartz aggregate.
   c. Custom Brick™: Acrylic polymer finish used in conjunction with a proprietary template system to create the look of stone, brick, slate or tile.
   d. Lymestone™: A premixed, 100% acrylic-based finish designed to replicate the appearance of limestone blocks.
   e. TerraNeo®: 100% acrylic-based finish with large mica chips and multi-colored quartz aggregates.
   f. Reflectit: 100% acrylic coating providing a pearlescent appearance.
4. Medallion Series PMR™ (Proven Mildew Resistance) Finishes: Water based, acrylic finishes with integral color and texture:
   a. Quarzputz® PMR
   b. Sandblast® PMR
   c. Freestyle® PMR
   d. Sandpebble® PMR
   e. Sandpebble® Fine PMR
5. Coatings, Primers and Sealers:
   a. Demandit®
   b. Tuscan Glaze™
   c. Revyvit®
   d. Color Prime
   e. Prymit®
   f. SealClear™

**PART III - EXECUTION**

**3.01 EXAMINATION**

A. Prior to installation of the Dryvit Interior Architectural Coatings, the contractor shall ensure that the substrate is of a type listed in section 1.04.B.1.

B. The contractor shall notify the general contractor and/or architect and/or owner of all discrepancies. Work shall not proceed until discrepancies have been corrected.

**3.02 SURFACE PREPARATION**

A. The substrate shall be prepared so as to be free of foreign materials such as oil, dust, dirt, form-release agents, efflorescence, loose paint, wax, water repellents, moisture, frost and any other materials that inhibit adhesion.

B. Concrete and masonry
   1. Shall be dry and cured a minimum of 28 days.
   2. All rough surfaces shall be skimmed with Dryvit Genesis or Genesis DM mixture to provide a smooth, flat and level base.

C. Gypsum Wallboard – Standard System
   1. All joints shall be taped and skimmed, fastener heads spotted with joint compound and sanded smooth.

D. Gypsum Wallboard – High Impact
   1. Surface shall be cleaned to remove all dust, dirt, or other contaminants that may impair the adhesion of a surface coating.

E. Plaster
   1. Plaster shall be finished smooth and allowed to cure a minimum of 28 days prior to application of finish.
   2. Surface shall be cleaned to remove all dust, dirt, or other contaminants that may impair the adhesion of a surface coating.

F. DensGlass Gold, DensShield, e$^2$XP™, Eterspan, Harditex, Hardiflex, Durock or other cement based sheathing boards.
   1. Surface shall be cleaned to remove all dust, dirt, or other contaminants that may impair the adhesion of a surface coating.

**3.03 INSTALLATION**

A. The Dryvit materials shall be mixed and applied in accordance with Dryvit's published product data sheets for the individual products specified.

B. Concrete and masonry
   1. Apply a continuous layer of Genesis or Genesis DM mixture over the entire wall surface to fill voids and provide a smooth level base for finish application.
   2. Allow the Genesis or Genesis DM mixture to cure a minimum of 24 hours until completely dry. Cool, humid conditions may require longer cure times.
   3. Using a brush, roller, or airless spray equipment, apply a coat of Color Prime over the dry Genesis, and allow to dry.
   4. Apply the specified finish in accordance with Dryvit's printed installation instructions.

C. Gypsum Wallboard – Standard System
   1. Using a brush, roller, or airless spray equipment, apply a coat of Color Prime over the prepared drywall and allow to dry.
   2. Apply the specified finish in accordance with Dryvit's published installation instructions.

D. Gypsum Wallboard – High Impact
   1. Apply a layer of base coat mixture to the wall surface at an approximate thickness of 1.6 mm (1/16 in). Immediately place the reinforcing mesh into the wet base coat layer and trowel smooth so the mesh is fully embedded. Lap adjacent pieces of mesh a minimum of 64 mm (2 ½ in). Continue until the entire wall surface is covered.
   2. Allow to cure a minimum of 24 hours until completely dry. Cool, humid conditions may require longer cure times.
   3. Using a brush, roller, or airless spray equipment, apply a coat of Color Prime over the prepared drywall and allow to dry.
   4. Apply the specified finish in accordance with Dryvit's published installation instructions.

E. Plaster
   1. Using a brush, roller, or airless spray equipment, apply a coat of Color Prime over the cured plaster and allow to dry.
   2. Apply the specified finish in accordance with Dryvit's published installation instructions.

F. DensGlass® Gold, Dens-Shield®, e$^2$XP, Eterspan®, Harditex®, Hardiflex®, Durock® or other cement based sheathing boards.
   1. Apply a layer of base coat mixture to the wall surface at an approximate thickness of 1.6 mm (1/16 in). Immediately place the reinforcing mesh into the wet base coat layer and trowel smooth so the mesh is fully

embedded. Lap adjacent pieces of mesh a minimum of 64 mm (2 ½ in). Continue until the entire wall surface is covered.

2. Allow to cure a minimum of 24 hours until completely dry. Cool, humid conditions may require longer cure times.
3. Using a brush, roller, or airless spray equipment, apply a coat of Color Prime over the prepared wall surface and allow to dry.
4. Apply the specified finish in accordance with Dryvit's published installation instructions.

G. Pool areas, locker rooms and other high humidity areas.

1. A substrate appropriate for the exposure conditions must be specified.
2. The Dryvit coatings shall not be used in areas of direct water contact.
3. The Dryvit coatings should not be considered to act as the vapor retarder for the wall, should one be required. If required, the vapor retarder shall be specified and installed separately.
4. The Dryvit coatings shall be installed as per the applicable substrate described above.

**3.04 FIELD QUALITY CONTROL**

A. The contractor shall be responsible for the proper application of the Dryvit materials.
B. Dryvit assumes no responsibility for on-site inspections or application of its products.

**3.05 CLEANING**

A. All excess Dryvit materials shall be removed from the job site by the contractor in accordance with contract provisions.
B. All surrounding areas, where Dryvit coatings have been installed, shall be left free of debris and foreign substances resulting from the contractor's work.

**3.06 PROTECTION**

A. Dryvit coatings, and the project shall be protected from damage and exposure to dust and other contaminants until dry.

**DISCLAIMER**

Information contained in this specification conforms to standard detail and product recommendations for the installation of the Dryvit Interior Architectural Coatings products as of the date of publication of this document and is presented in good faith. Dryvit Systems, Inc. assumes no liability, expressed or implied, as to the architecture, engineering or workmanship of any project. To ensure that you are using the latest, most complete information, contact:

Dryvit Systems, Inc.
One Energy Way
West Warwick, RI 02893
(401) 822-4100

*The Trained Contractor Certificate indicates certain employees of the company have been instructed in the proper application of Dryvit products and have received copies of Dryvit's Application Instructions and Specifications. The Trained Contractor Program is not an apprenticeship. Each trained contractor is an independent company experienced in the trade and bears responsibility for its own workmanship. Dryvit System's, Inc. assumes no liability for the workmanship of a trained contractor.


©Dryvit Systems, Inc. 2001

| EF-001 |
| --- |
| Revision Date: |

DS174

# Dryvit Interior Architectural Coatings

**100% Acrylic Architectural Coatings For Interior Use**

## Dryvit Interior Architectural Coatings Specifications

**DRYVIT SYSTEMS, INC.**
**MANUFACTURER SPECIFICATION**
**SECTION 09960**
**DRYVIT INTERIOR ARCHITECTURAL COATINGS**

## PART I - GENERAL

### 1.01 SUMMARY:

A. This document contains all the Manufacturer's requirements for the proper design, use, and installation of the Dryvit Interior Architectural Coatings.

B. SECTION INCLUDES
   1. Interior Architectural Coatings

C. RELATED SECTIONS
   1. Unit Masonry – Section 04200.
   2. Concrete – Sections 03300 and 03400.
   3. Vapor Barriers – Section 07260.
   4. Gypsum Board Systems – Sections 09250 and 09260.

### 1.02 REFERENCES

A. ASTM B 117 (Federal Test Standard 141A Method 6061) Test Method of Salt Spray (Fog) Testing
B. ASTM C 67 Modified Standard Test Methods for Sampling and Testing Brick and Structural Clay Tile
C. ASTM C 150 Specification for Portland Cement
D. ASTM C 177 Test Method for Steady-State Heat Flux Measurements and Thermal Transmission Properties by Means of the Guarded-Hot-Plate Apparatus
E. ASTM C 203 Test Methods for Breaking Load and Flexural Properties of Block-Type Thermal Insulation
F. ASTM C 272 Test Method for Water Absorption of Core Materials for Structural Sandwich Constructions
G. ASTM C 297 Test Method for Tensile Strength of Flat Sandwich Constructions in Flatwise Plane
H. ASTM C 303 Test Method for Density of Preformed Block-Type Thermal Insulation
I. ASTM C 518 Test Method for Steady-State heat Flux Measurements and Thermal Transmission Properties by Means of the Heat Flow Meter Apparatus
J. ASTM C 1177 Standard Specification for Glass Mat Gypsum Substrate for Use as Sheathing
K. ASTM C 1396 Standard Specification for Gypsum Board
L. ASTM D 968 (Federal Test Standard 141A Method 6191) Test Method for Abrasion Resistance of Organic Coatings by Falling Abrasive
M. ASTM D 1621 Proc. A Test Method for Compressive Properties of Rigid Cellular Plastics
N. ASTM D 1622 Test Method for Apparent Density of Rigid Cellular Plastics
O. ASTM D 2247 (Federal Test Standard 141A Method 6201) Standard Practice for Testing Water Resistance of Coatings in 100% Relative Humidity
P. ASTM D 2863 Test Method for Measuring the Minimum Oxygen Concentration to Support Candle-Like Combustion of Plastics (Oxygen Index)
Q. ASTM D 3273: Test Method for Resistance to Growth of Mold on Surfaces
R. ASTM D 4060 Standard Test Method for Abrasion Resistance of Organic Coatings by the Taber Abraser
S. ASTM E 84 Test Method for Surface Burning Characteristics of Building Materials
T. ASTM E 96 Test Methods for Water Vapor Transmission of Materials
U. ASTM E 2098 Test Method for Determining the Tensile Breaking Strength of Glass Fiber Reinforcing Mesh for use in Class PB Exterior Insulation and Finish Systems (EIFS), after Exposure to Sodium Hydroxide Solution
V. ASTM E 2134 Test Method for Evaluating the Tensile-Adhesion Performance of Exterior Insulation and Finish Systems (EIFS)
W. ASTM E 2485 (formerly EIMA Std. 101.01) Standard Test Method for Freeze-Thaw Resistance of Exterior Insulation and Finish Systems (EIFS) and Water-Resistive Barrier Coatings
X. ASTM G 23 (Federal Test Standard 141A Method 6151) Recommended Practice for Operating Exposure Apparatus (Carbon-Arc Type) With and Without Water, for Exposure of Nonmetallic Materials
Y. ASTM G 155 (Federal Test Standard 141A Method 6151) Standard Practice for Operating-Xenon Arc Light Apparatus for Exposure of Nonmetallic Materials
Z. ASTM G 154 Standard Practice for Operating Fluorescent Light Apparatus for UV Exposure Nonmetallic Materials
AA. DS159 Dryvit Water Vapor Transmission Data Sheet

### 1.03 DEFINITIONS

A. Contractor: The contractor that applies materials to the substrate.
B. Dryvit: Dryvit Systems, Inc., the manufacturer of the coating materials, a Rhode Island corporation.
C. Lamina: The layer consisting of the reinforced base coat and finish materials.

Door Frames

Issue Date: 28 JUL 2017

Revision Date: 29 JAN 2018

| | |
|---|---|
| Item Name | Door Frame |
| Description: | Steel Door Frame |
| Manufacturer: | Steelcraft |
| Frame Type: | F16 series standard double rebbet knock |
| Material: | 16 Gauge Steel, Heavy Duty |
| Finish: | Refer to guestroom plans and elevations |
| Hardware: | Refer to Door Schedule |
| Fire Rating: | Refer to Door Schedule |
| Quality Standards: | ANSI A250.8-2003 (SDI-100) |
| Lead Time: | To be verified |
| Warranty: | Warranty for 36 months from the date the final product is placed into operation. |

## SPECIAL INSTRUCTIONS

MANUFACTURER

Steelcraft

Customer Service 877-671-7011

ALTERNATE MANUFACTURER 1

ALTERNATE MANUFACTURER 2

ALTERNATE MANUFACTURER 3

AREAS

Doors

Issue Date: 28 JUL 2017

Revision Date: 14 FEB 2019

| | |
|---|---|
| Item Name | Door |
| Description: | Employee Breakroom, Office and Workroom Doors |
| Manufacturer: | VT Industries Inc. |
| Door Type: | Full flush door with vision glass |
| Material: | Wood/Glass, 1-3/4" thick |
| Core: | Solid Wood |
| Acoustical: | TBD |
| Finish: | Primed to paint |
| Color: | Refer to public space finish plans & elevations |
| Hardware: | Refer to Door Schedule |
| Glazing: | Refer to Door Schedule |
| Louver: | N/A |
| Fire Rating: | Refer to Door Schedule |
| Quality Standards: | TBD |
| Lead Time: | To be verified |
| Warranty: | To be verified |

## SPECIAL INSTRUCTIONS

MANUFACTURER

VT Industries Inc. (800) 827-1615

John Hill (712) 369-0553 jhill@vtindustries.com

ALTERNATE MANUFACTURER 1

ALTERNATE MANUFACTURER 2

ALTERNATE MANUFACTURER 3

AREAS

Issue Date: 28 JUL 2017

Revision Date: 14 FEB 2019

| | |
|---|---|
| Item Name | Door |
| Description: | W XYZ Storage Door |
| Manufacturer: | Steelcraft |
| Door Type: | Full flush with vision lite |
| Material: | 18 Gauge Steel, 1-3/4" thick |
| Core: | 1" cell craft honeycomb |
| Acoustical: | TBD |
| Finish: | Stainless steel finish |
| Color: | Refer to public space finish plans and elevations |
| Hardware: | Refer to Door Schedule |
| Glazing: | Refer to Door Schedule |
| Louver: | N/A |
| Fire Rating: | Refer to Door Schedule |
| Quality Standards: | TBD |
| Lead Time: | To be verified |
| Warranty: | Warranty for 36 months from the date the final product is placed into operation. |

## SPECIAL INSTRUCTIONS

| MANUFACTURER | AREAS |
|---|---|
| Steelcraft<br>Customer Service | |
| ALTERNATE MANUFACTURER 1 | |
| ALTERNATE MANUFACTURER 2 | |
| ALTERNATE MANUFACTURER 3 | |

Issue Date: 28 JUL 2017

Revision Date: 14 FEB 2019

| | |
|---|---|
| Item Name | Door |
| Description: | Cross Corridor & Exit Doors |
| Manufacturer: | Kawneer |
| Door Type: | 350 series, medium stile single-acting door with single lite. |
| Material: | Aluminum/Glass |
| Core: | N/A |
| Finish: | Clear Anodized |
| Acoustical: | TBD |
| Hardware: | Refer to Door Schedule |
| Glazing: | Refer to Door Schedule |
| Louver: | N/A |
| Fire Rating: | Refer to Door Schedule |
| Quality Standards: | TBD |
| Lead Time: | To be verified |
| Warranty: | To be verified |

## SPECIAL INSTRUCTIONS

MANUFACTURER

Kawneer

Ian Cable 603-552-3541

ALTERNATE MANUFACTURER 1

ALTERNATE MANUFACTURER 2

ALTERNATE MANUFACTURER 3

AREAS

Issue Date: 28 JUL 2017

Revision Date: 14 FEB 2019

| | |
|---|---|
| Item Name | Door |
| Description: | Electrical and Pool Equipment Exterior Doors |
| Manufacturer: | Steelcraft |
| Door Type: | Full flush door with metal louvers at top and bottom |
| Material: | Hollow metal |
| Core: | TBD |
| Acoustical: | TBD |
| Finish: | Primed to paint |
| Color: | Refer to public space finish plans and elevations |
| Hardware: | Refer to Door Schedule |
| Glazing: | N/A |
| Louver: | Refer to Door Schedule |
| Fire Rating | Refer to Door Schedule |
| Quality Standards: | TBD |
| Lead Time: | To be verified |
| Warranty: | To be veriifed |

## SPECIAL INSTRUCTIONS

| MANUFACTURER | AREAS |
|---|---|
| Steelcraft<br>Customer Service | |
| ALTERNATE MANUFACTURER 1 | |
| ALTERNATE MANUFACTURER 2 | |
| ALTERNATE MANUFACTURER 3 | |

Issue Date: 28 JUL 2017

Revision Date:

| | |
|---|---|
| Item Name | Door |
| Description: | Sliding Door |
| Manufacturer: | Dorma |
| Door Type: | All Glass, Automatic Sliding Door |
| Material: | Glass |
| Quality Standards: | Comply with ANSI A156.10 |
| Finish: | Clear Anodized Aluminum |
| Hardware: | Refer to Door Schedule |
| Louver: | N/A |
| Glazing: | 1/2" Tempered Glass |
| Fire Rating: | Refer to Door Schedule |
| Lead Time: | To be verified |
| Warranty: | Seller warrants all products will be free of defects in design, material, and workmanship, as described and advertised, of good quality and fit for the intended purpose. |

## SPECIAL INSTRUCTIONS

MANUFACTURER

DORMA Architectural Hardware (800) 823-8483

Arnie Kravitz (770) 335-5449 arnold.kravitz@dormakaba.com

ALTERNATE MANUFACTURER 1

ALTERNATE MANUFACTURER 2

ALTERNATE MANUFACTURER 3

AREAS

EXTERIOR BUILDING

Issue Date: 28 JUL 2017

Revision Date: 14 FEB 2019

| | |
|---|---|
| Item Name | Door |
| Description: | Tactic Entry |
| Manufacturer: | VT Industries Inc. |
| Door Type: | Medium stile single-acting door with single lite. |
| Material: | Wood/Glass |
| Core: | N/A |
| Finish: | Primed to paint |
| Color: | Refer to public space finish plans and elevations |
| Acoustical: | TBD |
| Hardware: | Refer to Door Schedule |
| Glazing: | Refer to Door Schedule |
| Louver: | N/A |
| Fire Rating: | Refer to Door Schedule |
| Quality Standards: | TBD |
| Lead Time: | To be verified |
| Warranty: | To be verified |

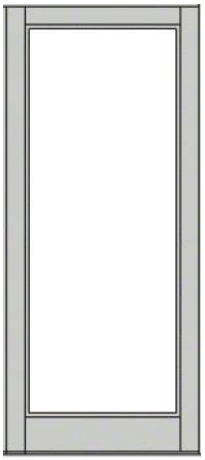

## SPECIAL INSTRUCTIONS

MANUFACTURER

VT Industries Inc. (800) 827-1615

John Hill (712) 369-0553 jhill@vtindustries.com

ALTERNATE MANUFACTURER 1

ALTERNATE MANUFACTURER 2

ALTERNATE MANUFACTURER 3

AREAS

Issue Date: 28 JUL 2017

Revision Date: 14 FEB 2019

| | |
|---|---|
| Item Name | Door |
| Description: | Corridor to Pool & Lobby to Exterior Doors |
| Manufacturer: | Kawneer |
| Door Type: | Medium stile storefront pair single-acting doors with single lite. |
| Material: | Aluminum/Glass |
| Core: | TBD |
| Finish: | Primed to paint |
| Color: | Refer to public space finish plans and elevations |
| Acoustical: | TBD |
| Hardware: | Refer to Door Schedule |
| Glazing: | Refer to Door Schedule |
| Louver: | N/A |
| Fire Rating: | Refer to Door Schedule |
| Quality Standards: | TBD |
| Lead Time: | To be verified |
| Warranty: | To be verified |

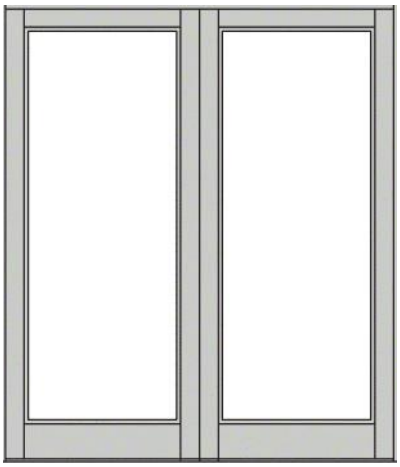

## SPECIAL INSTRUCTIONS

MANUFACTURER

Kawneer

Ian Cable 603-552-3541

ALTERNATE MANUFACTURER 1

ALTERNATE MANUFACTURER 2

ALTERNATE MANUFACTURER 3

AREAS

# DR-011

Doors

Issue Date: 14 FEB 2019

Revision Date:

| | |
|---|---|
| Item Name | Door |
| Description: | Door to Ice Machine |
| Manufacturer: | VT Industries Inc. |
| Door Type: | Medium stile single-acting door with single lite. |
| Material: | Wood/Glass |
| Core: | N/A |
| Finish: | Primed to paint |
| Color: | Refer to public space finish plans and elevations |
| Acoustical: | TBD |
| Hardware: | Refer to Door Schedule |
| Glazing: | Refer to Door Schedule |
| Louver: | N/A |
| Fire Rating: | Refer to Door Schedule |
| Quality Standards: | TBD |
| Lead Time: | To be verified |
| Warranty: | To be verified |

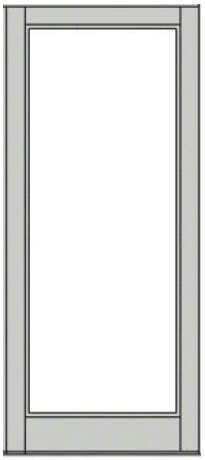

## SPECIAL INSTRUCTIONS

MANUFACTURER

VT Industries Inc. (800) 827-1615

John Hill (712) 369-0553 jhill@vtindustries.com

ALTERNATE MANUFACTURER 1

ALTERNATE MANUFACTURER 2

ALTERNATE MANUFACTURER 3

AREAS

Public Space

Ice

Issue Date: 28 JUL 2017

Revision Date: 07 FEB 2019

| | |
|---|---|
| Item Name | Door |
| Description: | Mechanical to Exterior |
| Manufacturer: | Steelcraft |
| Door Type: | Full flush door pair with metal louvers at top and bottom |
| Material: | Hollow metal |
| Core: | TBD |
| Acoustical: | TBD |
| Finish: | Primed to paint |
| Color: | Refer to public space finish plans and elevations |
| Hardware: | Refer to Door Schedule |
| Glazing: | N/A |
| Louver: | Refer to Door Schedule |
| Fire Rating | Refer to Door Schedule |
| Quality Standards: | TBD |
| Lead Time: | To be verified |
| Warranty: | To be veriifed |

## SPECIAL INSTRUCTIONS

MANUFACTURER

Steelcraft

Customer Service 877-671-7011

ALTERNATE MANUFACTURER 1

ALTERNATE MANUFACTURER 2

ALTERNATE MANUFACTURER 3

AREAS

Issue Date: 28 JUL 2017

Revision Date:

| | |
|---|---|
| Item Name | Door |
| Description: | Laundry Door |
| Manufacturer: | VT Industries Inc. |
| Door Type: | Full flush door |
| Material: | Hollow metal |
| Core: | TBD |
| Finish: | Primed to paint |
| Color: | Refer to public space finish plans and elevations |
| Acoustical: | TBD |
| Hardware: | Refer to Door Schedule |
| Glazing: | N/A |
| Louver: | N/A |
| Fire Rating: | Refer to Door Schedule |
| Quality Standards: | TBD |
| Lead Time: | To be verified |
| Warranty: | To be verified |

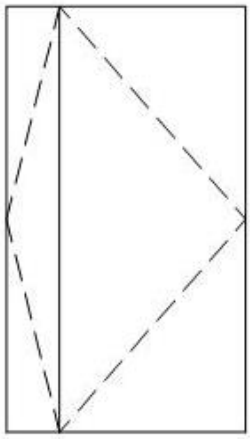

## SPECIAL INSTRUCTIONS

MANUFACTURER

VT Industries Inc. (800) 827-1615

Harry Schiller 712.369.3153 hschiller@vtindustries.com

ALTERNATE MANUFACTURER 1

ALTERNATE MANUFACTURER 2

ALTERNATE MANUFACTURER 3

AREAS

Issue Date: 28 JUL 2017

Revision Date: 07 FEB 2019

| | |
|---|---|
| Item Name | Door |
| Description: | Public & Indoor Pool Restroom Door |
| Manufacturer: | Kawneer |
| Door Type: | Medium stile single-acting door with single lite. |
| Material: | Aluminum/Glass |
| Core: | N/A |
| Finish: | TBD |
| Acoustical: | TBD |
| Color: | TBD |
| Hardware: | Refer to Door Schedule |
| Glazing: | Refer to Door Schedule |
| Louver: | N/A |
| Fire Rating: | Refer to Door Schedule |
| Quality Standards: | TBD |
| Lead Time: | To be verified |
| Warranty: | To be verified |

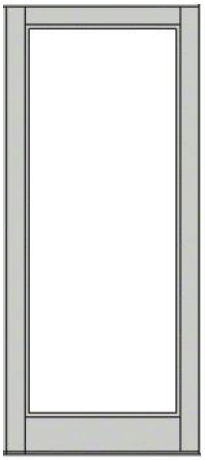

## SPECIAL INSTRUCTIONS

MANUFACTURER

Kawneer

Ian Cable 603-552-3541

ALTERNATE MANUFACTURER 1

ALTERNATE MANUFACTURER 2

ALTERNATE MANUFACTURER 3

AREAS

Issue Date: 28 JUL 2017

Revision Date: 29 JAN 2018

| | |
|---|---|
| Item Name | Door |
| Description: | Back of House Doors |
| Manufacturer: | Steelcraft |
| Door Type: | Full flush hollow metal door |
| Material: | 18 Gauge Steel, 1-3/4" thick |
| Core: | 1" cell craft honeycomb |
| Finish: | Primed to paint |
| Color: | Refer to Public Space finish plans and elevations |
| Acoustical: | TBD |
| Hardware: | Refer to Door Schedule |
| Glazing: | N/A |
| Louver: | N/A |
| Fire Rating | Refer to Door Schedule |
| Quality Standards: | TBD |
| Lead Time: | To be verified |
| Warranty: | Warranty for 36 months from the date the final product is placed into operation. |

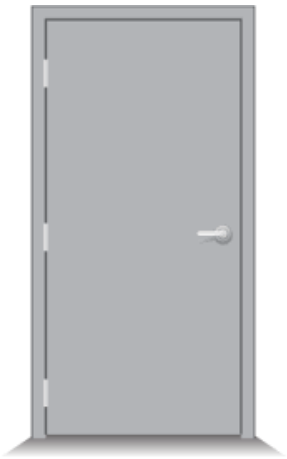

## SPECIAL INSTRUCTIONS

MANUFACTURER

Steelcraft

Customer Service 877-671-7011

ALTERNATE MANUFACTURER 1

ALTERNATE MANUFACTURER 2

ALTERNATE MANUFACTURER 3

AREAS

Issue Date: 14 FEB 2019

Revision Date:

| | |
|---|---|
| Item Name | Interior Door |
| Description: | Double Doors - Flush Wood Slab with port hole |
| Manufacturer: | Continental Group |
| Door Type: | Double Barn Door |
| Material: | Wood Veneer/MDF<br>Port Hole: Frosted 6mm tempered glass with metal matte black trim |
| Core: | Solid core particle board |
| Quality Standards: | Complies with:<br>ANSI/WDMA I.S. 6A-13<br>ANSI/BHMA A156.14<br>ASTM F 963-17 |
| Finish: | Oak White RIFT |
| Color: | Stained to match WF-004 |
| Hardware: | Provided by door manufacturer, refer to door cutsheets. |
| Glazing: | N/A |
| Fire Rating: | Refer to Door Schedule |
| Lead Time: | 10-14 Weeks depending on location |
| Warranty: | 1 Year Warranty |

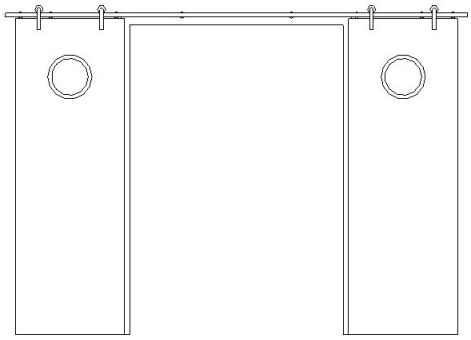

## SPECIAL INSTRUCTIONS

MANUFACTURER

Continental Group (614) 679-1201

Carly Albert (614) 595-4538 carly@cgsicorp.com

ALTERNATE MANUFACTURER 1

ALTERNATE MANUFACTURER 2

ALTERNATE MANUFACTURER 3

AREAS

Public Space

Meeting (Tactic)

# DR-018-VT

Doors

Issue Date: 14 FEB 2019

Revision Date:

| | |
|---|---|
| Item Name | Interior Door |
| Description: | Double Doors - Flush Wood Slab with port hole |
| Manufacturer: | VT Industries |
| Door Type: | Double Barn Door |
| Material: | Wood Veneer/MDF<br>Port Hole: Frosted 6mm tempered glass with metal matte black trim |
| Core: | Solid core particle board |
| Quality Standards: | Complies with:<br>ANSI/WDMA I.S. 6A-13<br>ANSI/BHMA A156.14<br>ASTM F 963-17 |
| Finish: | Oak White RIFT |
| Color: | Stained to match WF-004 |
| Hardware: | Provided by door manufacturer, refer to door cutsheets. |
| Glazing: | N/A |
| Fire Rating: | Refer to Door Schedule |
| Lead Time: | 10-14 Weeks depending on location |
| Warranty: | 1 Year Warranty |

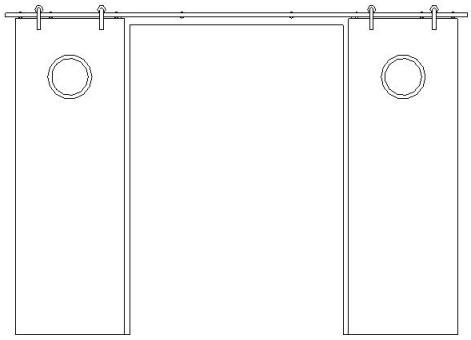

## SPECIAL INSTRUCTIONS

MANUFACTURER

VT Industries Inc. (800) 827-1615

John Hill (712) 369-0553 jhill@vtindustries.com

ALTERNATE MANUFACTURER 1

ALTERNATE MANUFACTURER 2

ALTERNATE MANUFACTURER 3

AREAS

Public Space

Meeting (Tactic)

# DR-019-CO

Doors

Issue Date: 14 FEB 2019

Revision Date:

| | |
|---|---|
| Item Name | Triple White Board Barn Doors |
| Description: | 2" Solid wood frame with white board middle insert |
| Manufacturer: | Continental Group |
| Door Type: | Closet |
| Material: | Wood veneer/MDF |
| Core: | Solid wood frame with stain and scratch resistant white board |
| Quality Standards: | Complies with:<br>ANSI/WDMA I.S. 6A-13<br>ANSI/BHMA A156.14<br>ASTM F 963-17<br>ANSI Z97.1 |
| Finish: | Oak White RIFT |
| Hardware: | Provided by door manufacturer, refer to door cutsheets. |
| Glazing: | N/A |
| Fire Rating: | Refer to Door Schedule |
| Lead Time: | 10-14 Weeks depending on location |
| Warranty: | 1 Year Warranty |

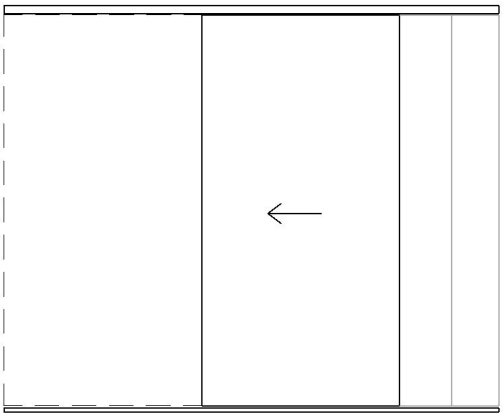

## SPECIAL INSTRUCTIONS

MANUFACTURER

Continental Group (614) 679-1201

Carly Albert (614) 595-4538 carly@cgsicorp.com

ALTERNATE MANUFACTURER 1

ALTERNATE MANUFACTURER 2

ALTERNATE MANUFACTURER 3

AREAS

Public Space

Meeting (Tactic)

Issue Date: 14 FEB 2019

Revision Date:

| | |
|---|---|
| Item Name | Triple White Board Barn Doors |
| Description: | 2" Solid wood frame with white board middle insert |
| Manufacturer: | VT Industries |
| Door Type: | Closet |
| Material: | Wood veneer/MDF |
| Core: | Solid wood frame with stain and scratch resistant white board |
| Quality Standards: | Complies with:<br>ANSI/WDMA I.S. 6A-13<br>ANSI/BHMA A156.14<br>ASTM F 963-17<br>ANSI Z97.1 |
| Finish: | Oak White RIFT |
| Hardware: | Provided by door manufacturer, refer to door cutsheets. |
| Glazing: | N/A |
| Fire Rating: | Refer to Door Schedule |
| Lead Time: | 10-14 Weeks depending on location |
| Warranty: | 1 Year Warranty |

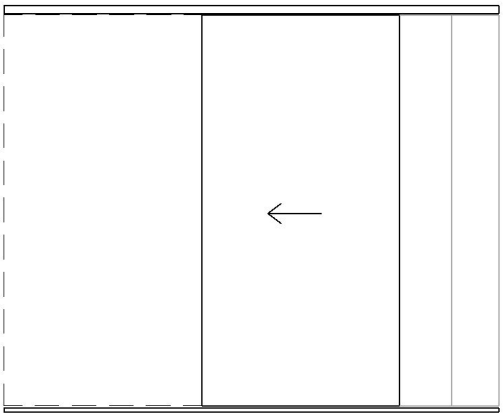

## SPECIAL INSTRUCTIONS

MANUFACTURER

VT Industries Inc. (800) 827-1615

John Hill (712) 369-0553 jhill@vtindustries.com

ALTERNATE MANUFACTURER 1

ALTERNATE MANUFACTURER 2

ALTERNATE MANUFACTURER 3

AREAS

Public Space

Meeting (Tactic)

Door Cutsheets

DR-018-CO

Revision Date:

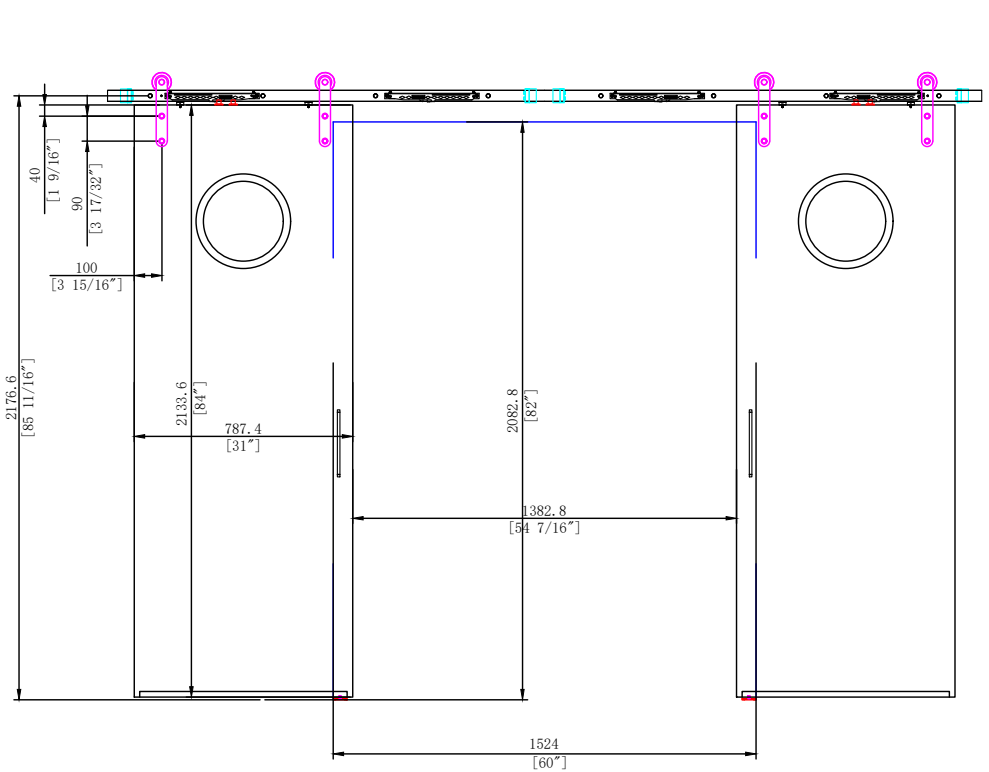


DOOR SLIDES THE OPPOSITE WAY

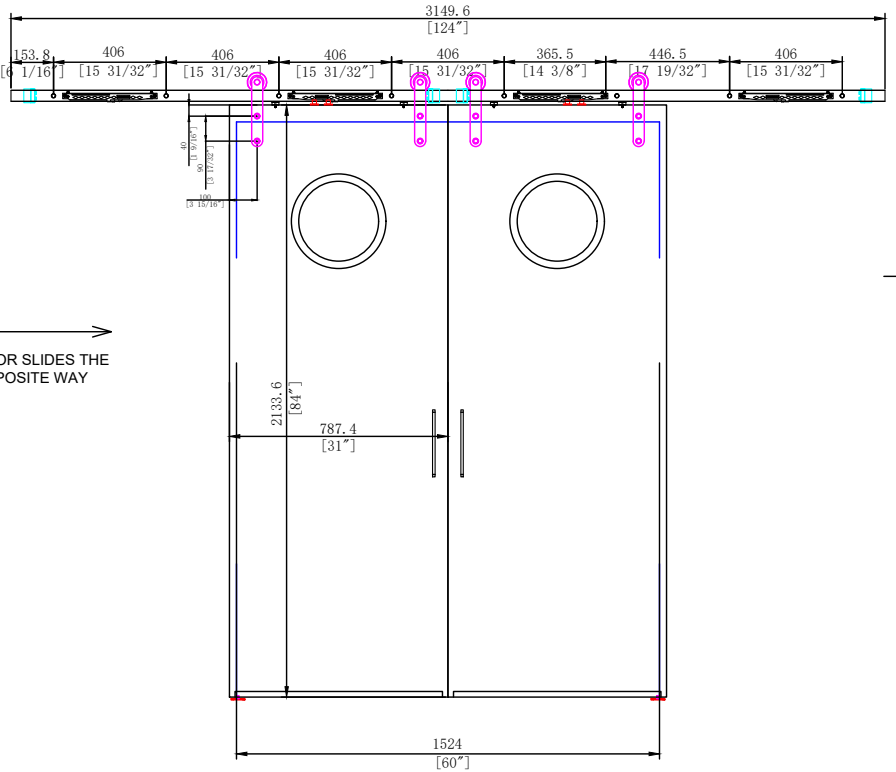


CLOSED

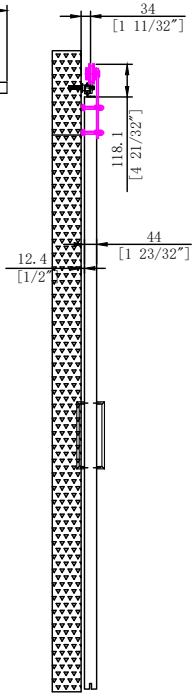


| | |
|---|---|
| Continental GROUP<br>Attn:Sean Snyder<br>614-679-1201<br>sean@cgsicorp.com<br>www.cgsicorp.com | Article# BD181202<br>Des.<br>Scale 1:1<br>Date 1/4/2019<br>Page 1 of 9 |

DR-018-CO

Revision Date:

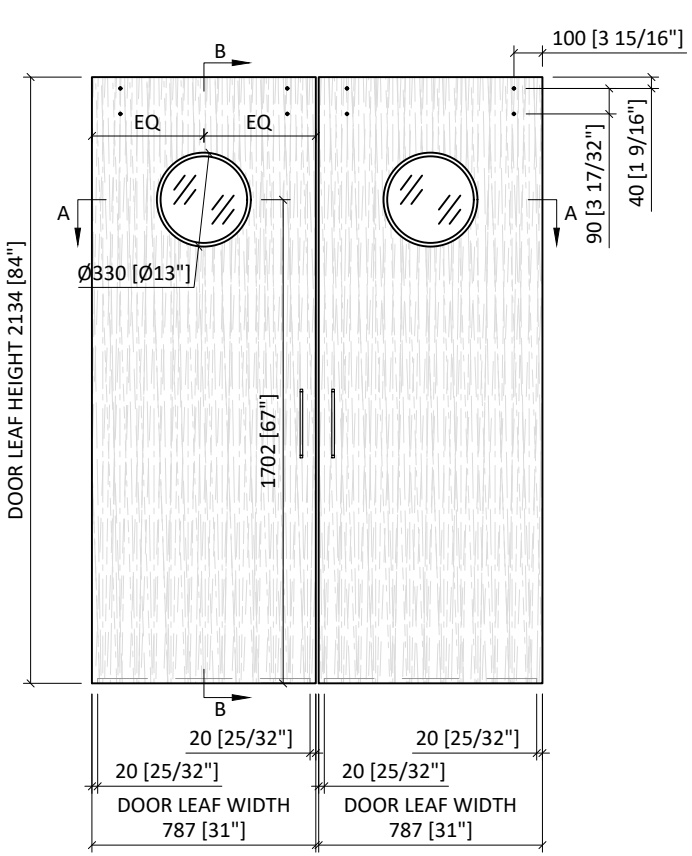


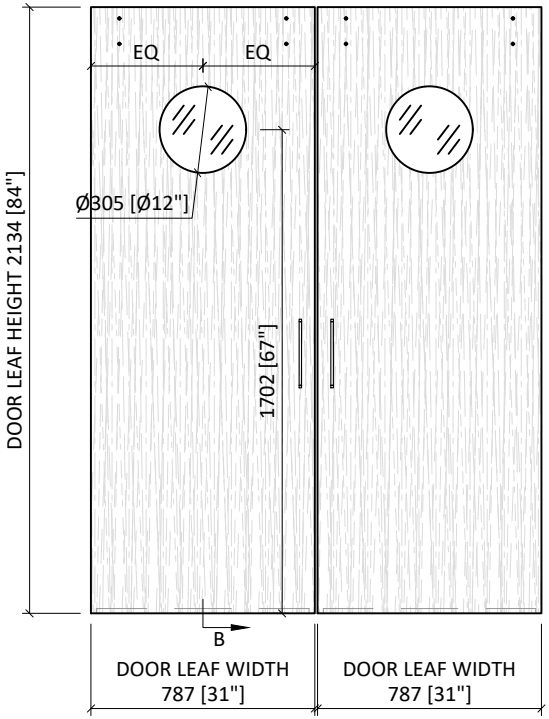


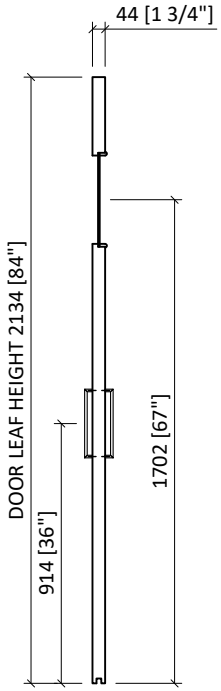


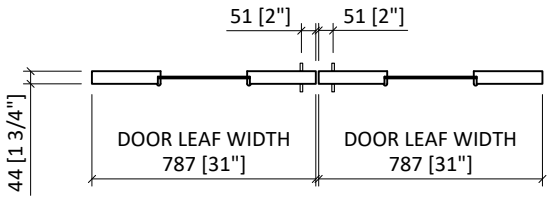


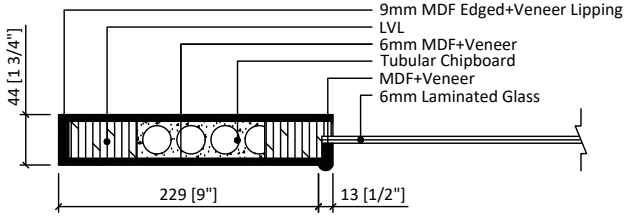



Continental GROUP

Attn:Sean Snyder
614-679-1201
sean@cgsicorp.com
www.cgsicorp.com


| | |
|---|---|
| Article# | BD181202 |
| Des. | DOOR SLAB |
| Scale | 1:1 |
| Date | 1/4/2019 |
| Page | 2 of 9 |

| DR-018-CO |
| --- |
| Revision Date: |

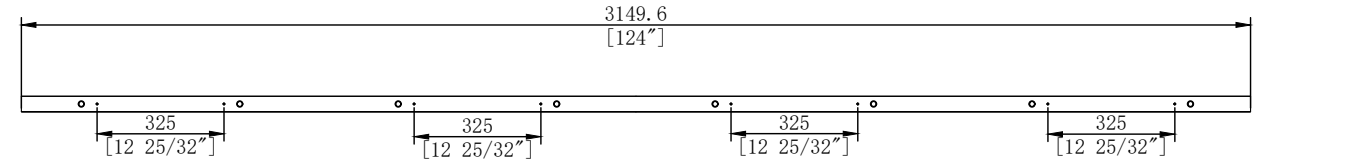


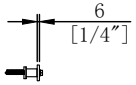


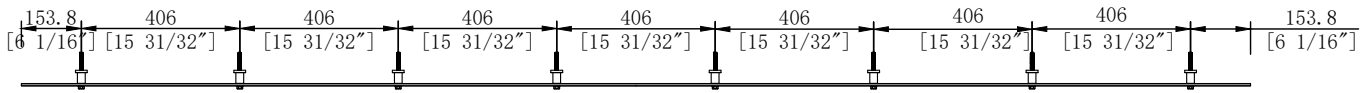



Continental GROUP

Attn:Sean Snyder
614-679-1201
sean@cgsicorp.com
www.cgsicorp.com


| | |
| --- | --- |
| Article# | BD181202 |
| Des. | TRACK |
| Scale | 1:1 |
| Date | 1/4/2019 |
| Page | 3 of 9 |

| DR-018-CO |
| --- |
| Revision Date: |

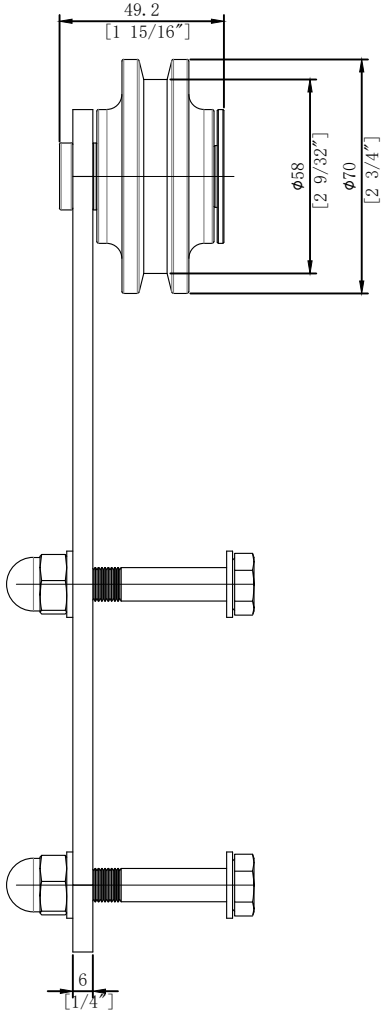


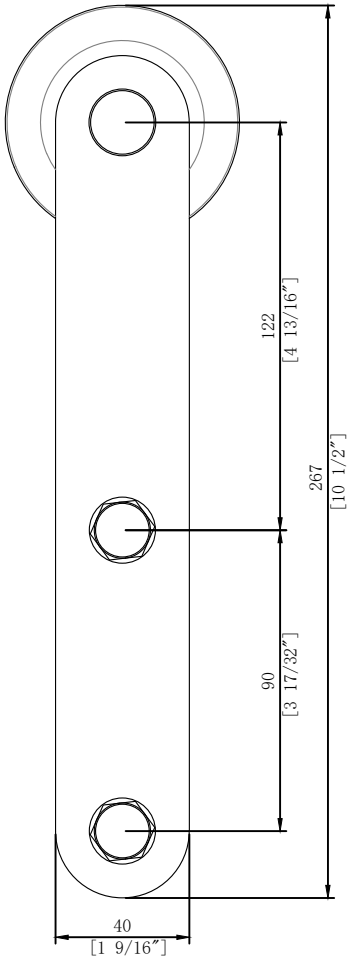



Continental GROUP

Attn:Sean Snyder
614-679-1201
sean@cgsicorp.com
www.cgsicorp.com


| | |
| --- | --- |
| Article | BD181202 |
| Des. | ROLLER |
| Scale | 1:1 |
| Date | 1/4/2019 |
| Page | 4 of 9 |

DR-018-CO

Revision Date:

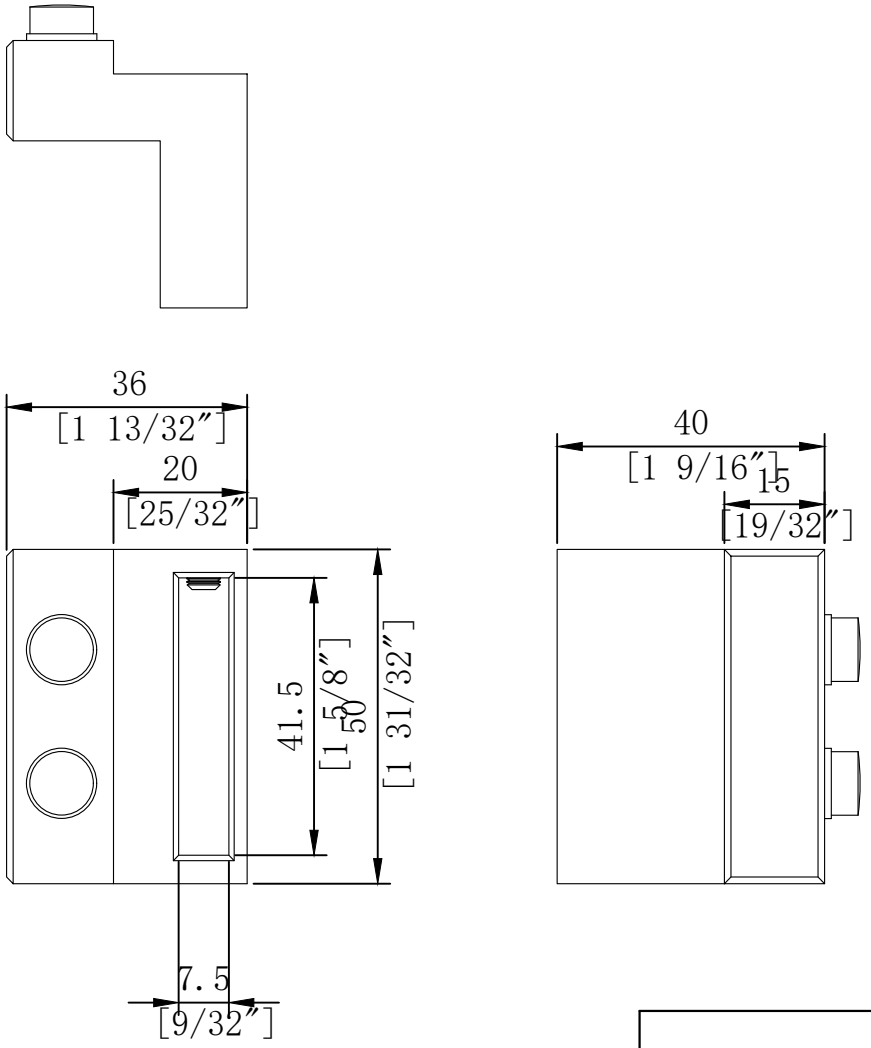



Continental GROUP

Attn:Sean Snyder

614-679-1201

sean@cgsicorp.com

www.cgsicorp.com


| | |
|---|---|
| Article | BD181202 |
| Des. | STOPPER |
| Scale | 1:1 |
| Date | 1/4/2019 |
| Page | 5 of 9 |

| DR-018-CO |
| --- |
| Revision Date: |

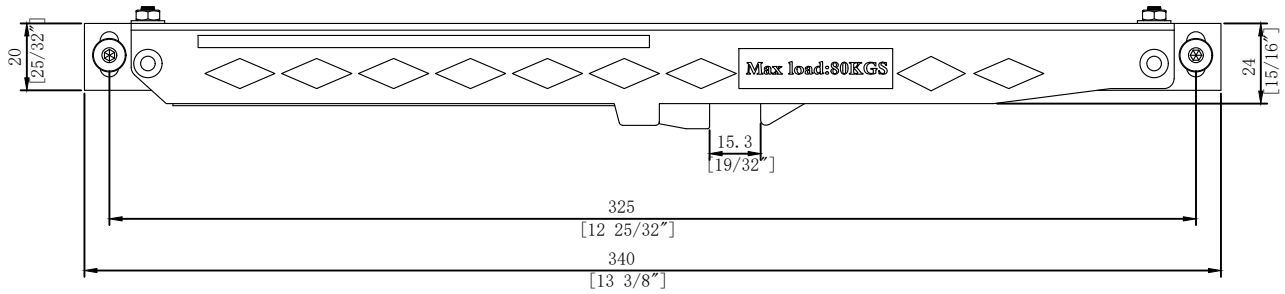


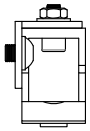


Continental GROUP

Attn:Sean Snyder
614-679-1201
sean@cgsicorp.com
www.cgsicorp.com


| | |
| --- | --- |
| Article | BD181202 |
| Article | SOFT CLOSE |
| Scale | 1:1 |
| Date | 1/4/2019 |
| Page | 6 of 9 |

DR-018-CO

Revision Date:

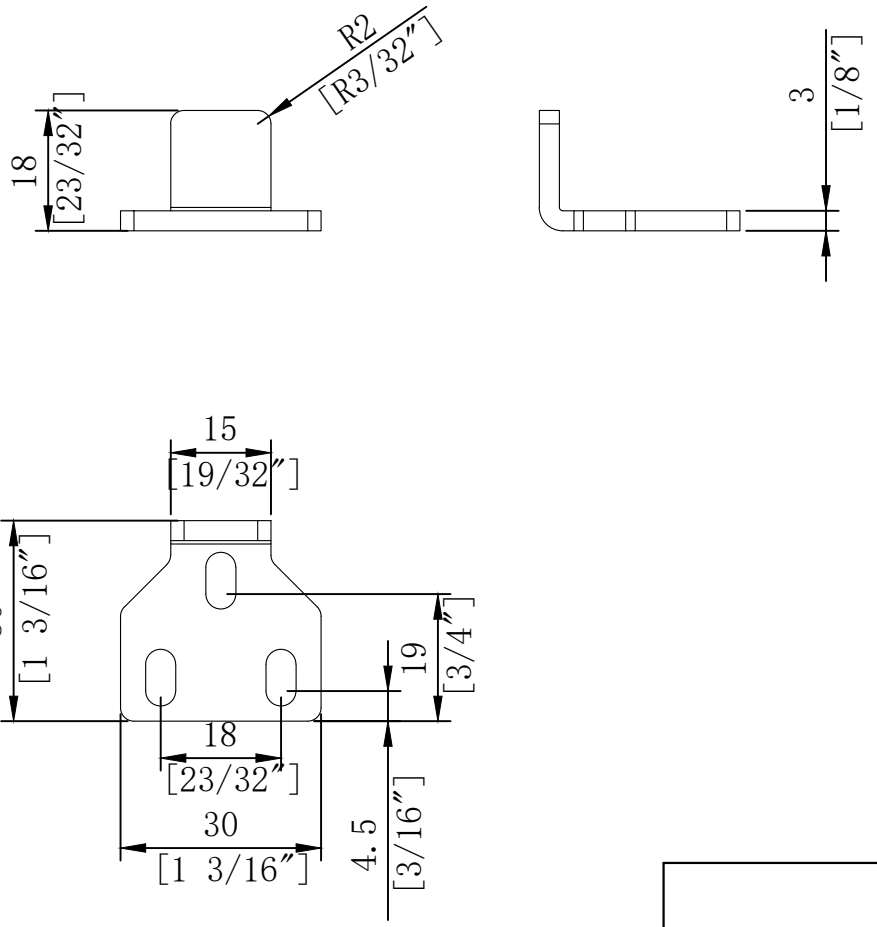


| | | |
|---|---|---|
| Continental GROUP<br>Attn:Sean Snyder<br>614-679-1201<br>sean@cgsicorp.com<br>www.cgsicorp.com | Article | BD181202 |
| | Des. | LATCH |
| | Scale | 1:1 |
| | Date | 1/4/2019 |
| | Page | 7 of 9 |

| DR-018-CO |
| --- |
| Revision Date: |

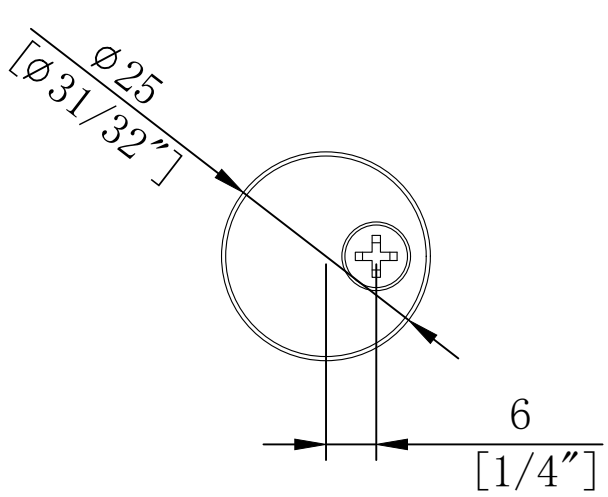


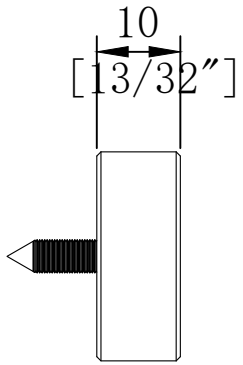


Continental GROUP
Attn:Sean Snyder
614-679-1201
sean@cgsicorp.com
www.cgsicorp.com

| | |
| --- | --- |
| Article | BD181202 |
| Des. | ANTI LIFT |
| Scale | 1:1 |
| Date | 1/4/2019 |
| Page | 8 of 9 |

| DR-018-CO |
| --- |
| Revision Date: |

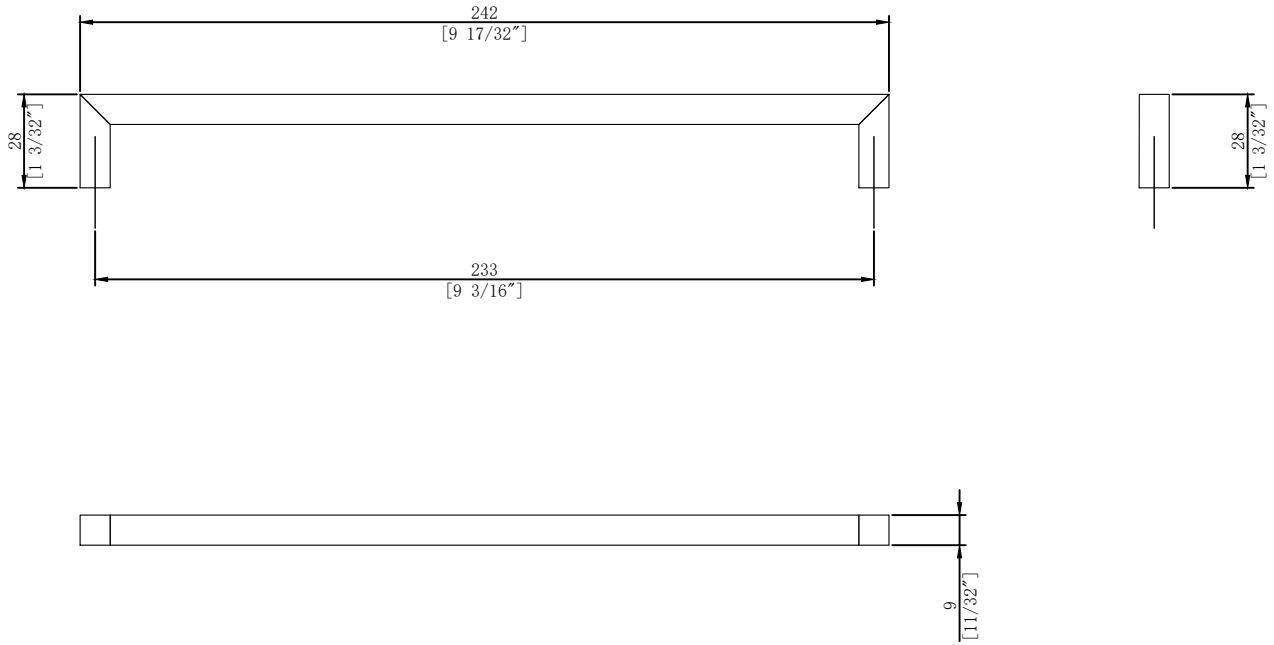


| | |
| --- | --- |
| Continental GROUP<br>Attn:Sean Snyder<br>614-679-1201<br>sean@cgsicorp.com<br>www.cgsicorp.com | |
| Article | BD181202 |
| Article | Handle |
| Scale | 1:1 |
| Date | 1/4/2019 |
| Page | 9 of 9 |

DR-019-CO

Revision Date:

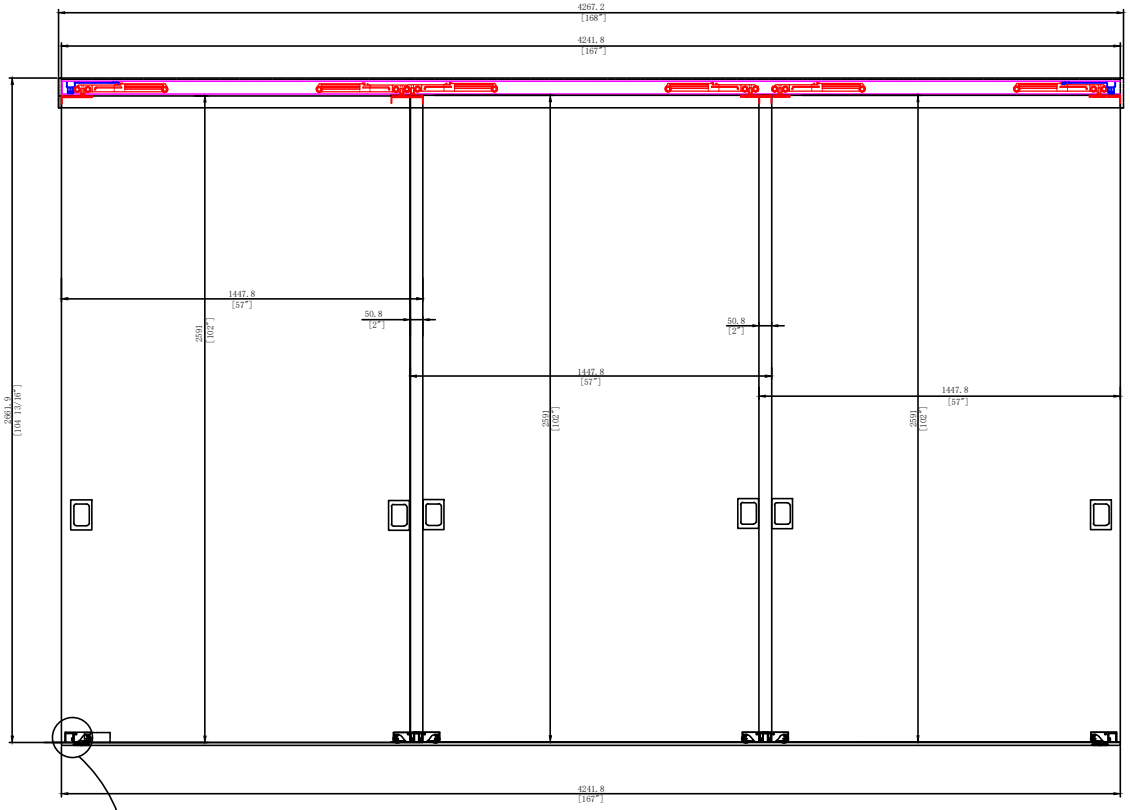


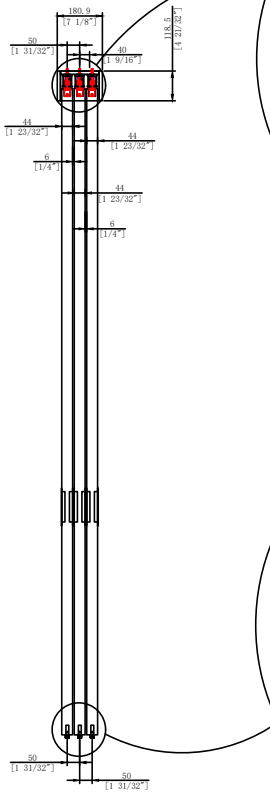


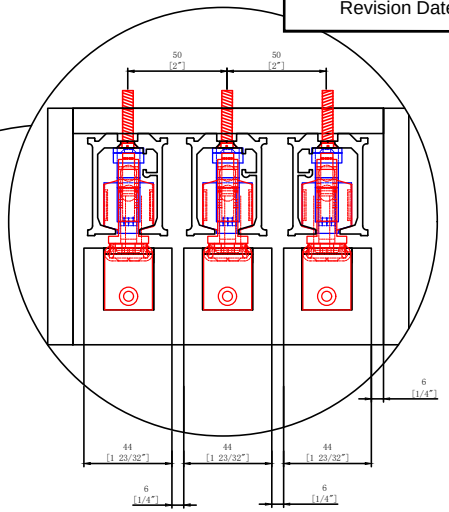


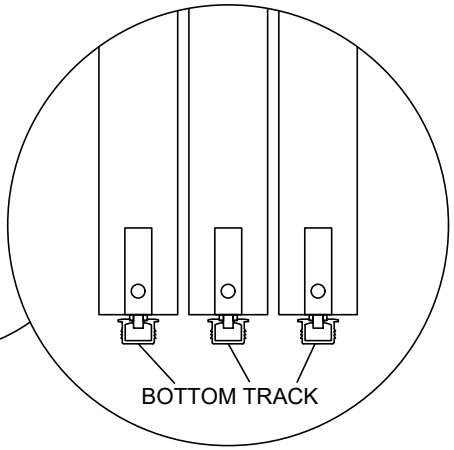


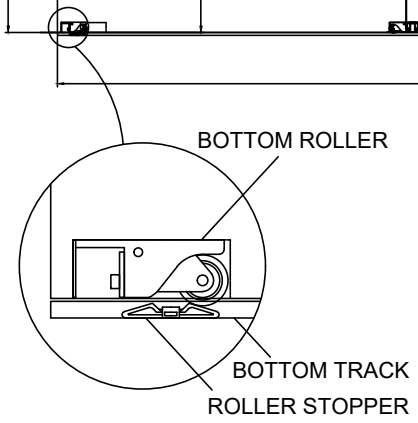



Continental GROUP

Attn:Sean Snyder
614-679-1201
sean@cgsicorp.com
www.cgsicorp.com


| | |
|---|---|
| Article# | BD181233 |
| Des. | DOOR SLAB |
| Scale | 1:1 |
| Date | 2/07/2019 |
| Page | 1 of 5 |

| DR-019-CO |
| --- |
| Revision Date: |

**FRONT**

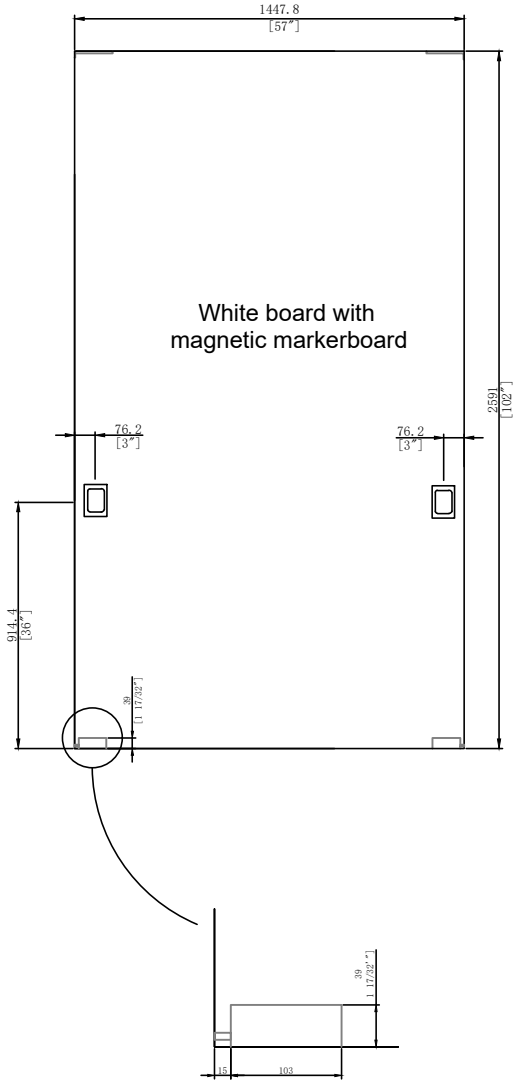


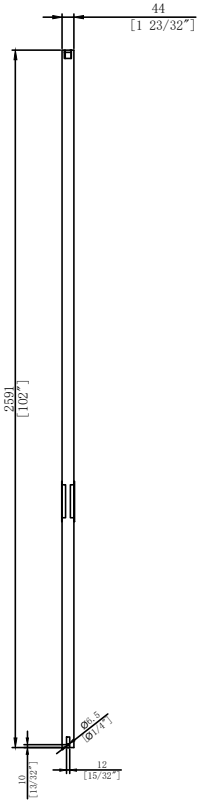


BACK

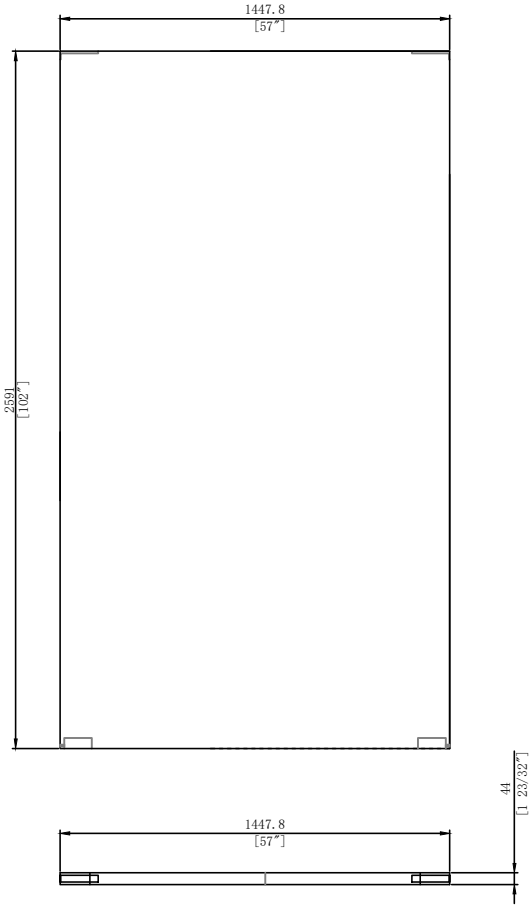


3PCS

| Continental GROUP | Article# | BD181233 |
| --- | --- | --- |
| | Des. | DOOR SLAB |
| | Scale | 1:1 |
| | Date | 2/07/2019 |
| | Page | 2 of 5 |


Attn:Sean Snyder
614-679-1201
sean@cgsicorp.com
www.cgsicorp.com

## TRACK COVER - Satin Stainless Steel Finish

DR-019-CO

Revision Date:

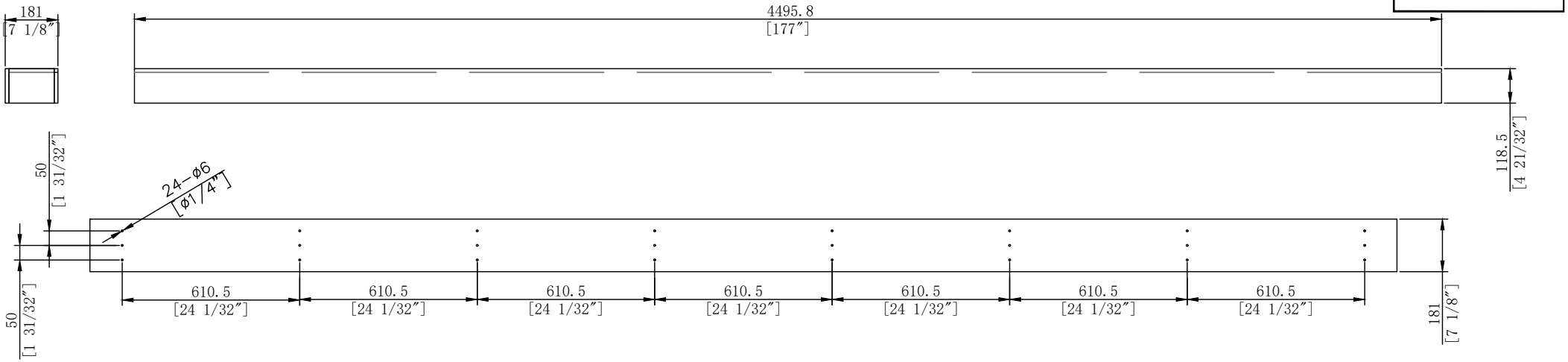


## TOP TRACK (X3)

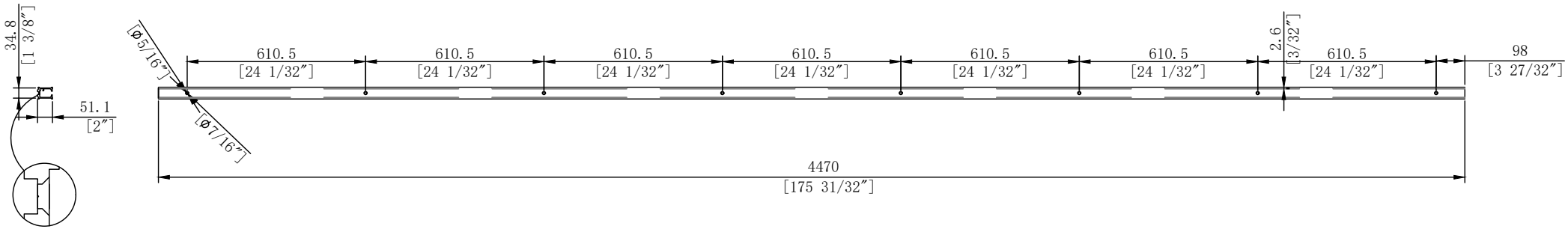


## BOTTOM TRACK

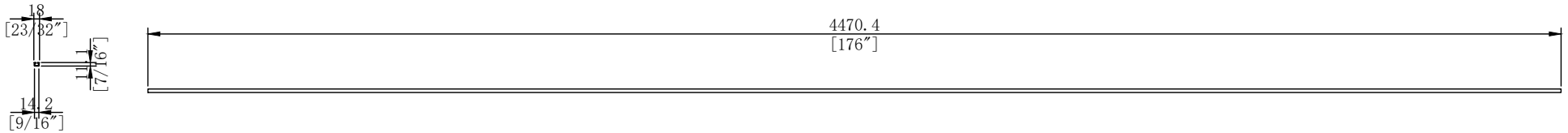


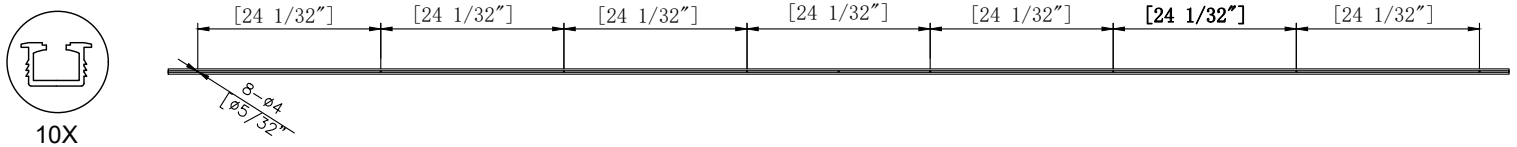



Continental GROUP

Attn:Sean Snyder
614-679-1201
sean@cgsicorp.com
www.cgsicorp.com


| | |
|---|---|
| Article# | BD181233 |
| Des. | Track Details |
| Scale | 1:1 |
| Date | 2/1/2019 |
| Page | 3 of 5 |

DR-019-CO

Revision Date:

## TOP ROLLER

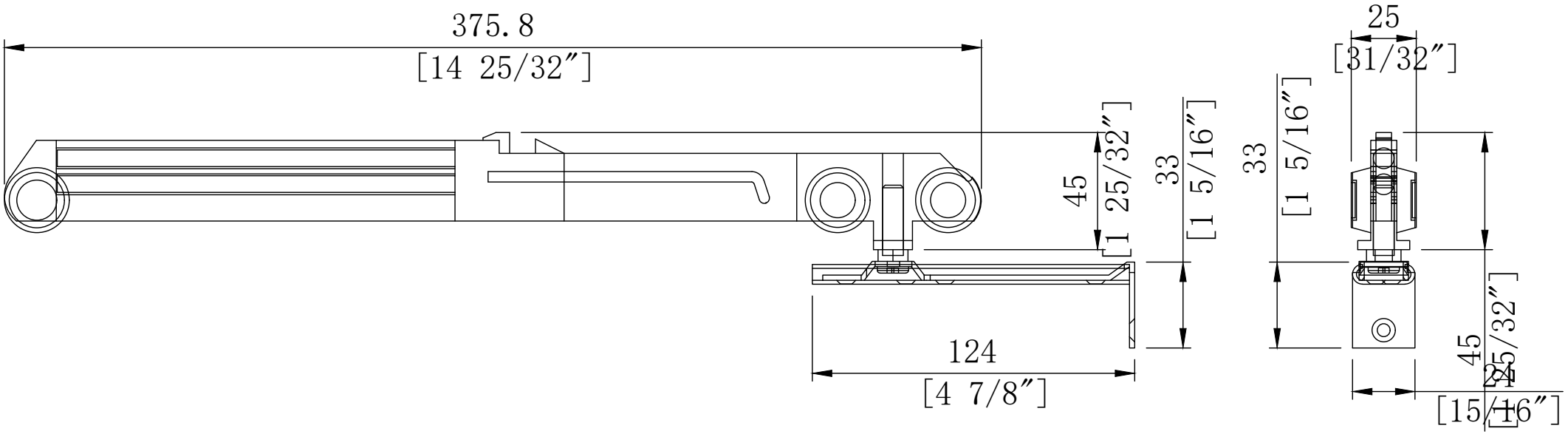


## BOTTOM ROLLER

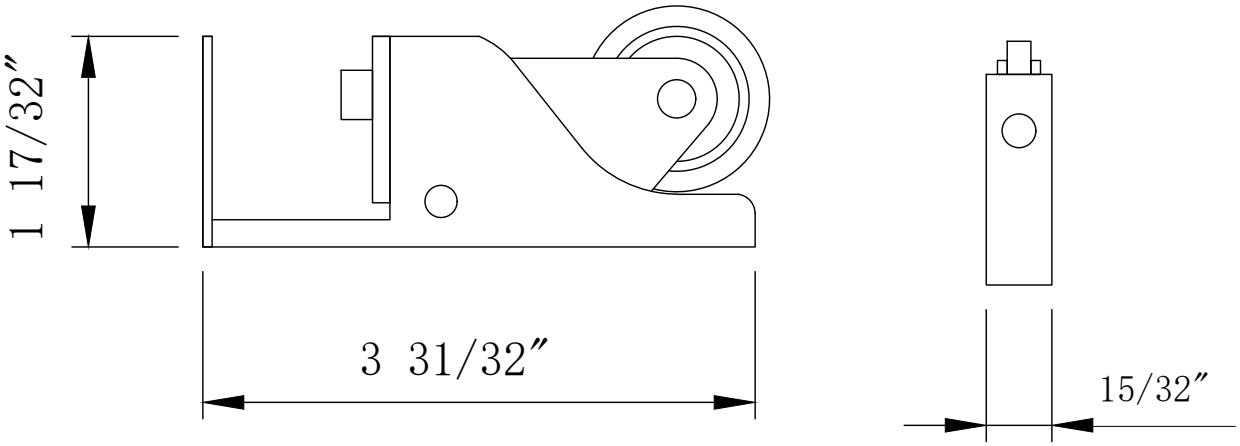


| | | |
|---|---|---|
| Continental GROUP<br>Attn:Sean Snyder<br>614-679-1201<br>sean@cgsicorp.com<br>www.cgsicorp.com | Article# | BD181233 |
| | Des. | Roller Detail |
| | Scale | 1:1 |
| | Date | 2/1/2019 |
| | Page | 4 of 5 |

| DR-019-CO |
| --- |
| Revision Date: |

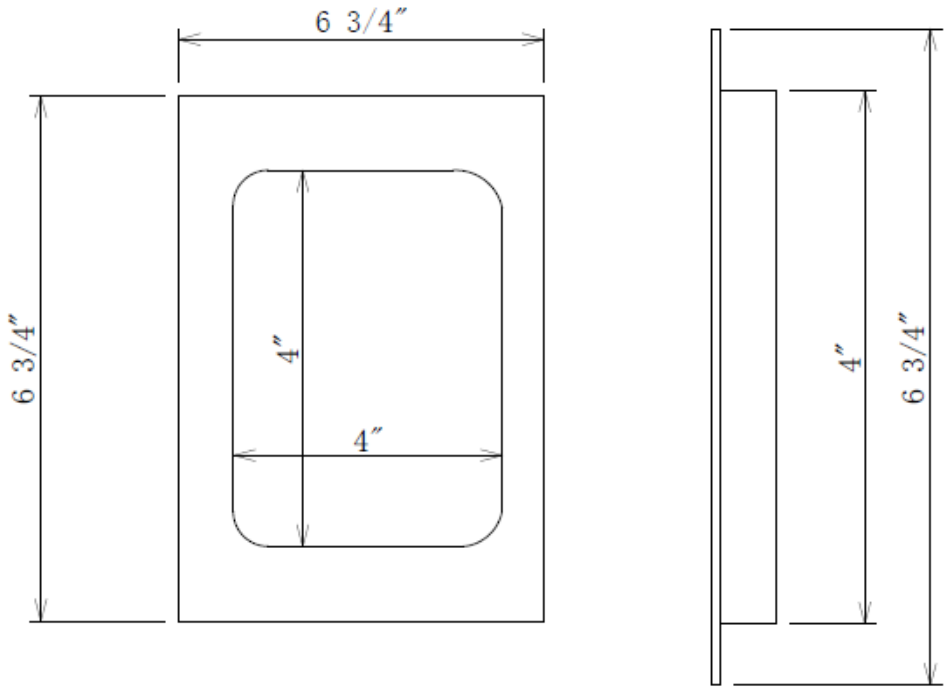


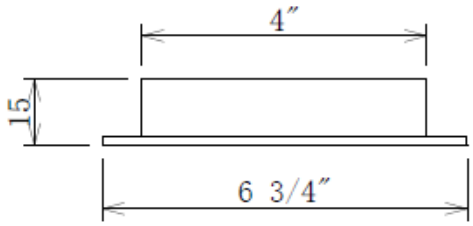


ADA COMPLIANT RECESSED DOOR PULL

FINISH: SATIN STAINLESS STEEL

Continental GROUP
Attn:Sean Snyder
614-679-1201
sean@cgsicorp.com
www.cgsicorp.com

| | |
| --- | --- |
| Article# | BD181233 |
| Des. | RECESSED DOOR PULL |
| Scale | 1:1 |
| Date | 2/07/2019 |
| Page | 5 of 5 |

Door Hardware

**Door Hardware Schedule - Public Space**

| | |
|---|---|
| Project: | ALOFT Hotels G4.0 |
| Décor: | Eclectic |
| Issue Date: | July 28, 2017 |
| Revision Date: | February 14, 2019 |

| | | | |
|---|---|---|---|
| **T-06 Exit Stair Door (between corridor & fire stairs)** | | | |
| HW-041 | 4 Hinges | T4A3786, 4.5" x 4.5" x US26D | McKinney |
| HW-036 | 1 RIM Exit Device | 12-8815 x ETMV x US32D | Sargent |
| HW-016 | 1 Surface Closer | 8501M x 689 | Norton |
| HW-017 | 1 Kick Plate | K1050 x US32D; 8" x 1" LDW x 4BE x CSK | Rockwood |
| HW-004 | 1 Door Stop | 406, US26D | Rockwood |
| HW-035 | 1 Gasketing Set | S88BL | PEMKO |
| **T-06.1 Exit Stair Door** | | | |
| *Option: For lockable trim replace exit device with the following:* | | | |
| HW-037 | 1 **RIM** Exit Device | 12-8813 x ETMV x US32D | Sargent |
| HW-032 | 1 Cylinder | 2153 x 626 | Yale |
| **T-07 Exterior Stair Door and BOH Exterior Door (Single)** | | | |
| HW-030 | 1 Continuous Hinge | CFM SLK-HD1 CL | PEMKO |
| HW-031 | 1 RIM Exit Device | 8804 | Sargent |
| HW-032 | 1 Cylinder | 2153 x 626 | Yale |
| HW-033 | 1 Electric Strike | 7000 LBM 630 | HES |
| HW-034 | 1 Surface Closer | UNI8501M x 689 Metal Cover | Norton |
| HW-017 | 1 Kick Plate | K1050; 8" x 1" LDW x 4BE x CSK | Rockwood |
| HW-028 | 1 Threshold | 171A | PEMKO |
| HW-029 | 1 Door Sweep | 29326CNB; Anodized Finish | PEMKO |
| HW-035 | 1 Gasketing Set | S88BL | PEMKO |
| HW-039 | 1 Card Reader | Essence RFID Remote Reader | Ving |
| **T-08 Public Restrooms** | | | |
| HW-002 | 3 Hinges | TA2714 4.5" x 4.5" x US26D | McKinney |
| HW-027 | 2 Door Pull Pairs | RM3302 x Type 5 x Full Height, US 32D | Rockwood |
| HW-016 | 1 Surface Closer | 8501M x 689 | Norton |
| HW-004 | 1 Door Stop | 406, US26D | Rockwood |
| HW-038 | 3 Silencers | 608 | Rockwood |
| **T-09 BOH Keyed Door (Luggage, Storage, Bar Storage, Food Prep & Storage)** | | | |
| HW-002 | 3 Hinges | TA2714; 4.5" x 4.5" x US26D | McKinney |
| HW-003 | 1 Electronic Lock | Essence RFID 4-Switch Lock x Straight Lever x US26D Satin (Brushed) Chrome | Vingcard |
| HW-016 | 1 Surface Closer | 8501M x 689 | Norton |
| HW-017 | 1 Kick Plate | K1050 x US32D; 8" x 1" LDW x 4BE x CSK | Rockwood |
| HW-004 | 1 Door Stop | 406, US26D | Rockwood |
| HW-038 | 3 Silencers | 608 | Rockwood |

| | | | |
|---|---|---|---|
| **T-10 BOH Clean Door and Elevator Machine Room** | | | |
| HW-002 | 3 Hinges | TA2714; 4.5" x 4.5" x US26D | McKinney |
| HW-003 | 1 Electronic Lock | Essence RFID 4-Switch Lock x Straight Lever x US26D Satin (Brushed) Chrome | Vingcard |
| HW-016 | 1 Surface Closer | 8501M x 689 | Norton |
| HW-017 | 1 Kick Plate | K1050 x US32D; 8" x 1" LDW x 4BE x CSK | Rockwood |
| HW-004 | 1 Wall Stop | 406, US26D | Rockwood |
| HW-038 | 3 Silencers | 608 | Rockwood |

| | | | |
|---|---|---|---|
| **T-11 Clean, Ice Room, Refresh, Electrical at Guest Level** | | | |
| HW-002 | 3 Hinges | TA2714; 4.5" x 4.5" x US26D | McKinney |
| HW-003 | 1 Electronic Set | Essence RFID 4-Switch Lock x Straight Lever x US26D Satin (Brushed) Chrome | Vingcard |
| HW-040 | 1 Surface Closer | CLP8501M x 689 | Norton |
| | Gasketing | S773BL | PEMKO |
| HW-017 | 1 Kick Plate | K1050 8"H x 1" LDW 4BE CSK US32D | Rockwood |

| | | | |
|---|---|---|---|
| **T-12 GM Office, Prep Area, Electrical Engineer, Mechanical, Work Area, Data Center, Tactic Storage** | | | |
| HW-002 | 3 Hinges | TA2714; 4.5" x 4.5" x US26D | McKinney |
| HW-003 | 1 Electronic Lock | Essence RFID 4-Switch Lock x Straight Lever x US26D Satin (Brushed) Chrome | Vingcard |
| HW-016 | 1 Surface Closer | 8501M x 689 | Norton |
| HW-017 | 1 Kick Plate | K1050 x US32D; 8" x 2" LDW x 4BE x CSK | Rockwood |
| HW-004 | 1 Door Stop | RM850 x US32D | Rockwood |
| HW-038 | 3 Silencers | 608 | Rockwood |

| | | | |
|---|---|---|---|
| **T-13 OUTDOOR POOL GATE** | | | |
| | Hinges | Gate Manufacturer to Furnish | |
| HW-052 | 1 Exit Device | Signature RFID 4 Switch Exit Device x Straight Lever US26D | Vingcard |
| | Closing Device | Gate Manufacturer to Furnish | |
| *** Note: Latch to be childproof* | | | |
| *** Note: Signature Exit Device is RFID Battery Operated Card Device. Bar can be cut down to width/size in field. Dimensions of inside latch are 2-5/8" x 8-3/8"* | | | |

| | | | |
|---|---|---|---|
| **T-14 VESTIBULE/ ENTRY (INTERIOR/ EXTERIOR)** | | | |
| HW-024 | 1 Cylinder | AS REQUIRED x US15 | Yale |
| | 1 NE | Door Manufacturer to Furnish All Remaining Hardware | |

| | | | |
|---|---|---|---|
| **T-15 EXTERIOR DOOR** | | | |
| HW-002 | Hinges | TA2714 4 1/2" x 4 1/2" x US26D | McKinney |
| HW-003 | 1 Electronic Lock | Essence RFID 4 Switch Lock x Straight Lever US26D | Vingcard |

| | | | |
|---|---|---|---|
| HW-034 | 1 Surface Closer | UNI8501 M x 689 | Norton |
| HW-028 | 1 Threshold | 171A | PEMKO |
| HW-035 | 1 Set Gasketing | S88BL | PEMKO |
| HW-029 | 1 Door Sweep | 345ANB | PEMKO |

**T-16 NOT USED**

**T-017 Tactic Entry**

| | | | |
|---|---|---|---|
| HW-002 | 3 Hinges | TA2714 4.5" x 4.5" x US26D | McKinney |
| HW-003 | 1 Electronic Lock | Essence RFID 4-Switch Lock x Straight Lever x US26D Satin (Brushed) Chrome | Vingcard |
| HW-016 | 1 Surface Closer | 8501M x 689 | Norton |
| HW-004 | 1 Door Stop | 406, US26D | Rockwood |
| HW-038 | 3 Silencers | 608 | Rockwood |

**T-18 Aluminum Storefront Non-Secure Door (Corridor to Pool)**

| | | | |
|---|---|---|---|
| HW-019 | 2 Pivot Sets | 547 x 626 | Rixson |
| HW-020 | 2 Intermediate Pivots | M190 x 626 | Rixson |
| HW-021 | 2 Concealed Closer | 0608 x 626 | Rixson |
| HW-022 | 2 Surface Overhead Stop | 8 x 36 630 | Rixson |
| HW-027 | 2 Door Pull Pairs | RM33020 x Type 5 x Full Height, Stainless Steel | Rockwood |
| HW-028 | 1 Threshold | 171A | PEMKO |
| | 1 Weather - Stripping | To be provided by Alum Door Supplier | |

*** Note: If not exterior doors eliminate threshold, sweep and weather-strip.*

**T-19 Exterior Storefront Secure (Single Door) (Splash to Backyard)**

| | | | |
|---|---|---|---|
| HW-019 | 1 Pivot Sets | 547 x 626 | Rixson |
| HW-020 | 1 Intermediate Pivots | M190 x 626 | Rixson |
| HW-021 | 1 Surface Overhead Stop | 0608 x 626 | Rixson |
| HW-022 | 1 Surface Overhead Stop | 8 x 36 630 | Rixson |
| HW-023 | 1 Mortise deadlock | MS1850S x 628 | Adams Rite |
| HW-024 | 1 Cylinder | AS REQUIRED x 626 | Yale |
| HW-027 | 1 Door Pull Pairs | RM3302 x Type 5 x Full Height, Stainless Steel | Rockwood |
| HW-028 | 1 Threshold | 171A | PEMKO |
| | 1 Weather - Stripping | To Be Provided by Alum Door Supplier | PEMKO |

*** Note: If doors are required for egress, remove flush bolts and deadbold. Use magnetic locks option.*

**T-20 Exterior Storefront Secure (Double Door) (Splash to Exterior)**

| | | | |
|---|---|---|---|
| HW-019 | 2 Pivot Sets | 547 x 626 | Rixson |
| HW-020 | 2 Intermediate Pivots | M190 x 626 | Rixson |
| HW-021 | 2 Overhead Concealed Closers | 0608 x 626 | Rixson |
| HW-022 | 2 Surface Overhead Stop | 8 x 36 630 | Rixson |
| HW-023 | 2 Mortise Deadbolt | MS1850S x 628 | Adams Rite |
| HW-024 | 1 Cylinder | AS REQUIRED x 626 | Yale |

| | | | |
|---|---|---|---|
| HW-025 | 1 Flushbolt | 2842 x US26D | Rockwood |
| HW-026 | 1 Dust Proof Strike | 570 x US26D | Rockwood |
| HW-027 | 1 Door Pull Pairs | RM3302 x Type 5 x Full Height, Stainless Steel | Rockwood |
| HW-028 | 1 Threshold | 171A | PEMKO |
| | 1 Weather - Stripping | To Be Provided by Alum Door Supplier | PEMKO |
| *** Note: If doors are required for egress, remove flush bolts and deadbold. Use magnetic locks option.* | | | |

| **T-21 Exterior Storefront Exit (Single Door) Exterior Tactic Door** | | | |
|---|---|---|---|
| HW-019 | 1 Pivot Set | 547 x 626 | Rixson |
| HW-020 | 1 Intermediate Pivot | M190 x 626 | Rixson |
| HW-021 | 1 Overhead Closer | 0608 x 626 | Rixson |
| HW-022 | 1 Surface Overhead Stop | 8 x 36 626 | Rixson |
| HW-053 | 1 RIM Exit Device | AD8504 Less Pull x US32D | Sargent |
| HW-024 | 1 Cylinder | AS REQUIRED x 626 | Yale |
| HW-027 | 1 Door Pull | RM3302 x Type 5 BTB Mounting x MP x Full Height, Stainless Steel | Rockwood |
| HW-028 | 1 Threshold | 171A | PEMKO |
| | 1 Gasketing Set | To Be Provided by Alum Door Supplier | |

| **T-22 Recharge and Splash (Single)** | | | |
|---|---|---|---|
| HW-019 | 1 Pivot Set | 547 x 626 | Rixson |
| HW-020 | 1 Intermediate Pivot | M190 x 626 | Rixson |
| HW-021 | 1 Overhead Closer | 0608 x 626 | Rixson |
| HW-022 | 1 Surface Overhead Stop | 8 x 36 626 | Rixson |
| HW-023 | 1 Deadbolt Mortise | MS1850S x 628 | Adams Rite |
| HW-024 | 1 Cylinder | AS REQUIRED x 626 | Yale |
| HW-027 | 1 Door Pull | RM3302 x Type 5 x Full Height, Stainless Steel | Rockwood |
| HW-028 | 1 Threshold | 171A | PEMKO |
| | 1 Weather- Stripping | To Be Provided by Alum Door Supplier | |

| **T-22.1 Recharge and Splash (Double)** | | | |
|---|---|---|---|
| HW-019 | 2 Pivot Set | 547 x 626 | Rixson |
| HW-020 | 2 Intermediate Pivot | M190 x 626 | Rixson |
| HW-021 | 2 Overhead Closer | 0608 x 626 | Rixson |
| HW-022 | 2 Surface Overhead Holder stop | 8 x 36 626 | Rixson |
| HW-023 | 1 Mortise Deadbolt | MS1850S x 628 | Adams Rite |
| HW-024 | 1 Cylinder | AS REQUIRED x 626 | Yale |
| HW-025 | 1 Flushbolt | 2842 x US32D | Rockwood |
| HW-026 | 1 Dust Proof Strike | 570 x US26D | Rockwood |
| HW-027 | 1 Pull | RM3320 x Type 5 x Full Height x US32D | Rockwood |
| HW-028 | 1 Threshold | 171A | PEMKO |
| | 1 Weather- Stripping | To Be Provided by Alum Door Supplier | |

| **T-23 Linen Chute** | | | |
|---|---|---|---|
| HW-002 | Hinges | TA2714; 4.5" x 4.5" x US26D | McKinney |

| | | | |
|---|---|---|---|
| HW-042 | 1 Latchset | PB5401LN x 626 | Yale |
| HW-016 | 1 Surface Closer | 8501M x 689 | Norton |
| HW-017 | 1 Kick Plate | K1050 x US32D; 8" x 2" LDW x 4BE x CSK | Rockwood |
| HW-004 | 1 Door Stop | 406, US26D | Rockwood |
| HW-038 | 3 Silencers | 608 | Rockwood |
| HW-054 | 1 EM Holder | FM998 689 | Rixson |

**T-24 Employee Water Closet, Splash Water Closet (Employee water closet to have no door closer)**

| | | | |
|---|---|---|---|
| HW-002 | Hinges | TA2714; 4.5" x 4.5" x US26D | McKinney |
| HW-018 | 1 Lockset | PB5402LN x 626 | Yale |
| HW-016 | 1 Surface Closer | 8501M x 689 | Norton |
| HW-004 | 1 Wall Stop | 406, US26D | Rockwood |
| HW-038 | 3 Silencers | 608 | Rockwood |

**T-27 Laundry**

| | | | |
|---|---|---|---|
| HW-002 | Hinges | TA2714; 4.5" x 4.5" x US26D | McKinney |
| HW-043 | 1 Flush Bolt | 555 (12"-24" as required) | Rockwood |
| HW-026 | 1 Dust Proof Strike | 570 x US26D | Rockwood |
| HW-003 | 1 Electronic Lock | Essence RFID 4 Switch Lock x Straight Lever US26D | Vingcard |
| HW-040 | 2 Surface Closer | CLP8501 M x 689 | Norton |
| HW-009 | 2 Silencer | 608 | Rockwood |
| HW-038 | 1 Astragal | 356AV | PEMKO |

**T-028 Exterior Stair Door and BOH Exterior Door (Pair)**

| | | | |
|---|---|---|---|
| HW-030 | 2 Continuous Hinge | CFM SLF-HD1 CL | PEMKO |
| HW-043 | 1 Flush Bolt | 555 (12"-24" as required) | Rockwood |
| HW-026 | 1 Dust Proof Strike | 570 x US26D | Rockwood |
| HW-044 | 1 Storeroom or Closet Lock | PBR 8805 FL | Yale |
| HW-040 | 2 Surface Closer | CLP8501 M x 689 | Norton |
| HW-028 | 1 Threshold | 171A | PEMKO |
| HW-045 | 1 Gasketing | 2891 APK | PEMKO |
| HW-029 | 2 Door Sweep | 345ANB | PEMKO |
| HW-046 | 1 Astragal | 357SP | PEMKO |

**T-29 Pool Equipment, Electrical**

| | | | |
|---|---|---|---|
| HW-002 | Hinges | TA2714; 4.5" x 4.5" x US26D | McKinney |
| HW-018 | 1 Storeroom Lockset | PB5405LN x 626 | Yale |
| HW-047 | 1 Surface Closer | CLP8501-T M x 689 | Norton |
| HW-028 | 1 Threshold | 171A | PEMKO |
| HW-035 | 1 Set Gasketing | S88BL | PEMKO |
| HW-029 | 1 Door Sweep | 345ANB | PEMKO |

**T-32 Dryer Access**

| | | | |
|---|---|---|---|
| HW-002 | Hinges | TA2714 US26D | McKinney |
| HW-048 | 1 Lockset | PB5407LN x 626 | Yale |
| HW-017 | 1 Kick Plate | K1050 x US32D/ 8" x 1" LDW x 4BE x CSK | Rockwood |
| HW-004 | 1 Door Stop | 406, US26D | Rockwood |
| HW-038 | 3 Silencer | 608 | Rockwood |

| | | | |
|---|---|---|---|
| **T-33 Cross Corridor** | | | |
| HW-041 | Hinges | T4A3786 US26D | McKinney |
| HW-049 | 2 Exit Device | 12 NB8715 x ETG x US32D | Sargent |
| HW-016 | 2 Surface Closer | P8501 M x 689 | Norton |
| HW-050 | 2 EM Holders | FM996 | Rixson |
| HW-017 | 2 Kick Plate | K1050 x US32D/ 8" x 1" LDW x 4BE x CSK | Rockwood |
| HW-028 | 1 Threshold | 171A | PEMKO |
| HW-035 | 1 Set Gasketing | S88BL | PEMKO |
| HW-051 | 1 Set Meeting Stiles | 297AS | PEMKO |

**T-34 Sliding Barn Door at Tactic (Listening Room)**

*Refer to door specification DR-018 for door hardware specification

**T-35 Sliding Barn Door at Tactic (in front of Tv)**

*Refer to door specification DR-019 for door hardware specification

Issue Date: 28 JUL 2017

Revision Date: 29 JAN 2018

| | |
|---|---|
| Item Name | Hinge |
| Description: | Five knuckle standard weight hinge |
| CSI Division: | 087100 |
| Manufacturer: | ASSA ABLOY/McKinney |
| Model #: | TA2714 |
| Finish: | US26D, Satin Chromium |
| Quality Standards: | ANSI/BHMA A156.1, 156.7 |
| Lead Time: | 5-10 business days |
| Warranty: | One year limited warranty |
| Note: | Refer to door hardware schedule for hardware locations |

## SPECIAL INSTRUCTIONS

MANUFACTURER

ASSA ABLOY

Jan McKenzie 512-585-5205 jan.mckenzie@assaabloy.com

ALTERNATE MANUFACTURER 1

ALTERNATE MANUFACTURER 2

ALTERNATE MANUFACTURER 3

AREAS

Issue Date: 28 JUL 2017

Revision Date: 29 JAN 2018

| | |
|---|---|
| Item Name | Electronic Lock |
| Description: | Electronic lock with mobile access |
| CSI Division: | 087100 |
| Manufacturer: | ASSA ABLOY/VingCard |
| Model #: | Essence with ADB DA Strike |
| Door Handle: | Straight |
| Finish: | Satin Chrome |
| Quality Standards: | EN14846. Fire 1634.1 |
| Lead Time: | 12 weeks |
| Warranty: | Two year limited warranty |
| Note: | Refer to door hardware schedule for hardware locations |

Straight Handle

## SPECIAL INSTRUCTIONS

MANUFACTURER

ASSA ABLOY

Jan McKenzie 512-585-5205 jan.mckenzie@assaabloy.com

ALTERNATE MANUFACTURER 1

ALTERNATE MANUFACTURER 2

ALTERNATE MANUFACTURER 3

AREAS

Issue Date: 28 JUL 2017

Revision Date: 29 JAN 2018

| | |
|---|---|
| Item Name | Door Stop |
| Description: | Convex wall stop with vinyl bumper |
| CSI Division: | 087100 |
| Manufacturer: | ASSA ABLOY/Rockwood |
| Model #: | 406 |
| Finish: | US26D, Satin Chrome Plated |
| Quality Standards: | N/A |
| Lead Time: | 5-10 business days |
| Warranty: | One year limited |
| Note: | Refer to door hardware schedule for hardware locations |

## SPECIAL INSTRUCTIONS

MANUFACTURER

ASSA ABLOY

Jan McKenzie 512-585-5205 jan.mckenzie@assaabloy.com

ALTERNATE MANUFACTURER 1

ALTERNATE MANUFACTURER 2

ALTERNATE MANUFACTURER 3

AREAS

Issue Date: 28 JUL 2017

Revision Date: 29 JAN 2018

| | |
|---|---|
| Item Name | Surface Closer |
| Description: | 8000 Series Door Closer with metal cover |
| CSI Division: | 087100 |
| Manufacturer: | ASSA ABLOY/Norton |
| Model #: | 8501M |
| Finish: | 689 |
| Quality Standards: | ANSI/BHMA A156.4, Grade 1 Certified; UL/cUL listed for use on fire rated doors; UL10C listed for positive pressure fire test; complies with ADA and ANSI A117.1; manufactured in an ISO 9001 facility |
| Lead Time: | 5-10 business days |
| Warranty: | 25 year limited warranty |
| Note: | Refer to door hardware schedule for hardware locations |

## SPECIAL INSTRUCTIONS

MANUFACTURER

ASSA ABLOY

Jan McKenzie 512-585-5205 jan.mckenzie@assaabloy.com

ALTERNATE MANUFACTURER 1

ALTERNATE MANUFACTURER 2

ALTERNATE MANUFACTURER 3

AREAS

Issue Date: 28 JUL 2017

Revision Date: 29 JAN 2018

| | |
|---|---|
| Item Name | Kick Plate |
| Description: | Metal Kick Plate - Standard Duty |
| Manufacturer: | ASSA ABLOY/Rockwood |
| Model #: | K1050/8" x 1" LDW |
| Finish: | US32D |
| Quality Standards: | ANSI: J102 |
| Lead Time: | 5-10 business days |
| Warranty: | One year limited warranty |
| Note: | Refer to door hardware schedule for hardware locations |

## SPECIAL INSTRUCTIONS

MANUFACTURER

ASSA ABLOY

Jan McKenzie 512-585-5205 jan.mckenzie@assaabloy.com

ALTERNATE MANUFACTURER 1

ALTERNATE MANUFACTURER 2

ALTERNATE MANUFACTURER 3

AREAS

Issue Date: 28 JUL 2017

Revision Date: 29 JAN 2018

| | |
|---|---|
| Item Name | Lockset |
| Description: | 5400 Series lever lock |
| CSI Division: | 087100 |
| Manufacturer: | ASSA ABLOY/Yale |
| Model #: | PB5402LN |
| Finish: | 626, Satin Chrome |
| Quality Standards: | UL 3 Hour Fire Rating; ANSI/BHMA A156.2 Series 4000, Grade 1; ANSI A117.1 Accessibility Code |
| Lead Time: | 4-6 weeks |
| Warranty: | 2 Year Limited Warranty |
| Note: | Refer to door hardware schedule for hardware locations |

## SPECIAL INSTRUCTIONS

MANUFACTURER

ASSA ABLOY

Jan McKenzie 512-585-5205 jan.mckenzie@assaabloy.com

ALTERNATE MANUFACTURER 1

ALTERNATE MANUFACTURER 2

ALTERNATE MANUFACTURER 3

AREAS

Issue Date: 28 JUL 2017

Revision Date: 29 JAN 2018

| | |
|---|---|
| Item Name | Pivots |
| Description: | Offset Pivot Set |
| CSI Division: | 087100 |
| Manufacturer: | ASSA ABLOY/Rixson |
| Model #: | 547 |
| Finish: | 626, Satin Chrome |
| Quality Standards: | ANSI/BHMA A156.4 ANSI C07202 |
| Lead Time: | 10-15 business days |
| Warranty: | Two year limited warranty |
| Note: | Refer to door hardware schedule for hardware locations |

## SPECIAL INSTRUCTIONS

MANUFACTURER

ASSA ABLOY

Jan McKenzie 512-585-5205 jan.mckenzie@assaabloy.com

ALTERNATE MANUFACTURER 1

ALTERNATE MANUFACTURER 2

ALTERNATE MANUFACTURER 3

AREAS

Issue Date: 28 JUL 2017

Revision Date: 29 JAN 2018

| | |
|---|---|
| Item Name | Pivots |
| Description: | Offset Intermediate Pivot |
| CSI Division: | 087100 |
| Manufacturer: | ASSA ABLOY/Rixson |
| Model #: | M190 |
| Finish: | 626, Satin Chrome |
| Quality Standards: | ANSI/BHMA A156.4 ANSI C07321/ C07371 |
| Lead Time: | 10-15 business days |
| Warranty: | Two year limited warranty |
| Note: | Refer to door hardware schedule for hardware locations |

## SPECIAL INSTRUCTIONS

MANUFACTURER

ASSA ABLOY

Jan McKenzie 512-585-5205 jan.mckenzie@assaabloy.com

ALTERNATE MANUFACTURER 1

ALTERNATE MANUFACTURER 2

ALTERNATE MANUFACTURER 3

AREAS

Issue Date: 28 JUL 2017

Revision Date: 29 JAN 2018

| | |
|---|---|
| Item Name | Closer |
| Description: | Overhead Concealed Closer |
| CSI Division: | 087100 |
| Manufacturer: | ASSA ABLOY/Rixson |
| Model #: | 0608 |
| Finish: | 626, Satin Chrome |
| Quality Standards: | ANSI/BHMA A156.4 ANSI C05052/ C05062 |
| Lead Time: | 10-15 Business Days |
| Warranty: | 2 year Limited Warranty |
| Note: | Refer to door hardware schedule for hardware locations |

## SPECIAL INSTRUCTIONS

MANUFACTURER

ASSA ABLOY

Jan McKenzie 512-585-5205 jan.mckenzie@assaabloy.com

ALTERNATE MANUFACTURER 1

ALTERNATE MANUFACTURER 2

ALTERNATE MANUFACTURER 3

AREAS

Issue Date: 28 JUL 2017

Revision Date: 29 JAN 2018

| | |
|---|---|
| Item Name | Holder |
| Description: | Surface Mount Stop and Holder |
| CSI Division: | 087100 |
| Manufacturer: | ASSA ABLOY/Rixson |
| Model #: | 8 x 36 |
| Finish: | 630, Satin Stainless Steel |
| Quality Standards: | ANSI/BHMA A156.8, Grade 1 and 2 Standards |
| Lead Time: | 10-15 Business Days |
| Warranty: | Two year limited warranty |
| Note: | Refer to door hardware schedule for hardware locations |

## SPECIAL INSTRUCTIONS

MANUFACTURER

ASSA ABLOY

Jan McKenzie 512-585-5205 jan.mckenzie@assaabloy.com

ALTERNATE MANUFACTURER 1

ALTERNATE MANUFACTURER 2

ALTERNATE MANUFACTURER 3

AREAS

Issue Date: 28 JUL 2017

Revision Date: 29 JAN 2018

| | |
|---|---|
| Item Name | Deadbolt |
| Description: | Mortise deadlock with laminated stainless steel bolt activated by a pivot mechanism. |
| CSI Division: | 087100 |
| Manufacturer: | ASSA ABLOY/Adams Rite |
| Model #: | MS1850S |
| Finish: | 628, Clear Anodized |
| Quality Standards: | ANSI/ BHMA Type E8211 Grade 1 Standard |
| Lead Time: | 5-10 Business Days |
| Warranty: | Five year limited warranty |
| Note: | Refer to door hardware schedule for hardware locations |

## SPECIAL INSTRUCTIONS

MANUFACTURER

ASSA ABLOY

Jan McKenzie 512-585-5205 jan.mckenzie@assaabloy.com

ALTERNATE MANUFACTURER 1

ALTERNATE MANUFACTURER 2

ALTERNATE MANUFACTURER 3

AREAS

Issue Date: 28 JUL 2017

Revision Date: 29 JAN 2018

| | |
|---|---|
| Item Name | Cylinder |
| Description: | Standard Mortise Cylinder |
| CSI Division: | 087100 |
| Manufacturer: | ASSA ABLOY/Yale |
| Model #: | As Required |
| Finish: | US 15 |
| Quality Standards: | Not Applicable |
| Lead Time: | 2-4 weeks |
| Warranty: | One year limited warranty |
| Note: | Refer to door hardware schedule for hardware locations |

## SPECIAL INSTRUCTIONS

MANUFACTURER

ASSA ABLOY

Jan McKenzie 512-585-5205 jan.mckenzie@assaabloy.com

ALTERNATE MANUFACTURER 1

ALTERNATE MANUFACTURER 2

ALTERNATE MANUFACTURER 3

AREAS

Issue Date: 28 JUL 2017

Revision Date: 29 JAN 2018

| | |
|---|---|
| Item Name | Flush Bolt |
| Description: | Automatic flush bolt set |
| CSI Division: | 087100 |
| Manufacturer: | ASSA ABLOY/Rockwood |
| Model #: | 2842 |
| Finish: | US26D, Satin Chrome Plated |
| Quality Standards: | ANSI A156.3 Type 25 |
| Lead Time: | 5-10 business days |
| Warranty: | One year limited warranty |
| Note: | Refer to door hardware schedule for hardware locations |

## SPECIAL INSTRUCTIONS

MANUFACTURER

ASSA ABLOY

Jan McKenzie 512-585-5205 jan.mckenzie@assaabloy.com

ALTERNATE MANUFACTURER 1

ALTERNATE MANUFACTURER 2

ALTERNATE MANUFACTURER 3

AREAS

Issue Date: 28 JUL 2017

Revision Date: 29 JAN 2018

| | |
|---|---|
| Item Name | Dust Proof Strike |
| Description: | Brass, dust proof strike |
| CSI Division: | 087100 |
| Manufacturer: | ASSA ABLOY/Rockwood |
| Model #: | 570 |
| Finish: | US26D, Satin Chrome Plated |
| Quality Standards: | ANSI A156.16 L04251 |
| Lead Time: | 5-10 business days |
| Warranty: | One year limited warranty |
| Note: | Refer to door hardware schedule for hardware locations |

## SPECIAL INSTRUCTIONS

MANUFACTURER

ASSA ABLOY

Jan McKenzie 512-585-5205 jan.mckenzie@assaabloy.com

ALTERNATE MANUFACTURER 1

ALTERNATE MANUFACTURER 2

ALTERNATE MANUFACTURER 3

AREAS

Issue Date: 28 JUL 2017

Revision Date: 29 JAN 2018

| | |
|---|---|
| Item Name | Pull |
| Description: | Straight pull with flat ends and mid-post |
| CSI Division: | 087100 |
| Manufacturer: | ASSA ABLOY/Rockwood |
| Model #: | RM3302, Type 5, 1-1/2" Diameter x Full Height |
| Finish: | Stainless Steel |
| Quality Standards: | ANSI A156.16 L04021 |
| Lead Time: | 5-10 Business Days |
| Warranty: | One year limited warranty |
| Note: | Refer to door hardware schedule for hardware locations |

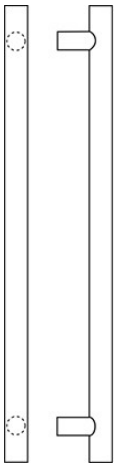

## SPECIAL INSTRUCTIONS

MANUFACTURER

ASSA ABLOY

Jan McKenzie 512-585-5205 jan.mckenzie@assaabloy.com

ALTERNATE MANUFACTURER 1

ALTERNATE MANUFACTURER 2

ALTERNATE MANUFACTURER 3

AREAS

Issue Date: 28 JUL 2017

Revision Date: 29 JAN 2018

| | |
|---|---|
| Item Name | Threshold |
| Description: | Saddle Threshold |
| CSI Division: | 087100 |
| Manufacturer: | ASSA ABLOY/Pemko |
| Model #: | 171 |
| Finish: | 171A: Mill Finish Aluminum Aluminum |
| Quality Standards: | Barrier-Free; BHMA Certified; Fire Rated - UL10C - Positive Pressure; UL 4L10 |
| Lead Time: | 3-5 business days |
| Warranty: | Ten year limited warranty |
| Note: | Refer to door hardware schedule for hardware locations |

## SPECIAL INSTRUCTIONS

MANUFACTURER

ASSA ABLOY

Jan McKenzie 512-585-5205 jan.mckenzie@assaabloy.com

ALTERNATE MANUFACTURER 1

ALTERNATE MANUFACTURER 2

ALTERNATE MANUFACTURER 3

AREAS

Issue Date: 28 JUL 2017

Revision Date: 29 JAN 2018

| | |
|---|---|
| Item Name | Sweep |
| Description: | Brush door bottom |
| CSI Division: | 087100 |
| Manufacturer: | ASSA ABLOY/Pemko |
| Model #: | 345ANB |
| Finish: | Mill finish |
| Quality Standards: | BHMA Certified; Fire rated - UL10B-negative pressure UL10C-positive pressure; green guard certified |
| Lead Time: | 3-5 business days |
| Warranty: | 5 years limited warranty |
| Note: | Refer to door hardware schedule for hardware locations |

**345**

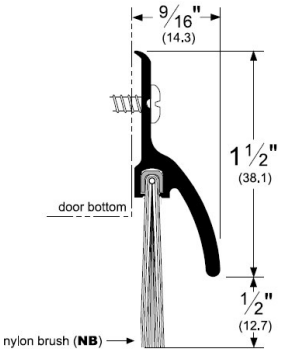


## SPECIAL INSTRUCTIONS

MANUFACTURER

ASSA ABLOY

Jan McKenzie 512-585-5205 jan.mckenzie@assaabloy.com

ALTERNATE MANUFACTURER 1

ALTERNATE MANUFACTURER 2

ALTERNATE MANUFACTURER 3

AREAS

Issue Date: 28 JUL 2017

Revision Date: 29 JAN 2018

| | |
|---|---|
| Item Name | Continuous Hinge |
| Description: | Full Mortise Edge Hung Hinge - Inset |
| CSI Division: | 087100 |
| Manufacturer: | ASSA ABLOY/Pemko |
| Model #: | CFM SLF-HD1 |
| Finish: | CL, Clear anodized aluminum |
| Quality Standards: | Fire Rated - UL10C Positive Pressure |
| Lead Time: | 3-5 business days |
| Warranty: | One year limited warranty |
| Note: | Refer to door hardware schedule for hardware locations |

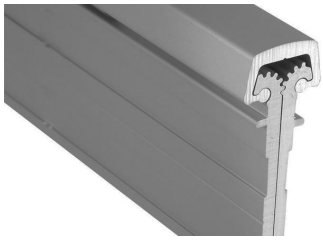

## SPECIAL INSTRUCTIONS

MANUFACTURER

ASSA ABLOY

Jan McKenzie 512-585-5205 jan.mckenzie@assaabloy.com

ALTERNATE MANUFACTURER 1

ALTERNATE MANUFACTURER 2

ALTERNATE MANUFACTURER 3

AREAS

Issue Date: 28 JUL 2017

Revision Date: 29 JAN 2018

| | |
|---|---|
| Item Name | Exit Device |
| Description: | 8800 Rim Exit Device |
| CSI Division: | 087100 |
| Manufacturer: | ASSA ABLOY/Sargent |
| Model #: | 8804 x 862 |
| Finish: | US32D |
| Quality Standards: | ANSI A156.6-J501 |
| Lead Time: | 10-15 business days |
| Warranty: | One year limited |
| Note: | Refer to door hardware schedule for hardware locations |

## SPECIAL INSTRUCTIONS

MANUFACTURER

ASSA ABLOY

Jan McKenzie 512-585-5205 jan.mckenzie@assaabloy.com

ALTERNATE MANUFACTURER 1

ALTERNATE MANUFACTURER 2

ALTERNATE MANUFACTURER 3

AREAS

Issue Date: 28 JUL 2017

Revision Date: 29 JAN 2018

| | |
|---|---|
| Item Name | Cylinder |
| Description: | Standard Mortise Cylinder |
| CSI Division: | 087100 |
| Manufacturer: | ASSA ABLOY/Yale |
| Model #: | 2153 |
| Finish: | 626, Satin Chrome Plated |
| Quality Standards: | Not Applicable |
| Lead Time: | 2-4 weeks |
| Warranty: | One year limited warranty |
| Note: | Refer to door hardware schedule for hardware locations |

## SPECIAL INSTRUCTIONS

MANUFACTURER

ASSA ABLOY

Jan McKenzie 512-585-5205 jan.mckenzie@assaabloy.com

ALTERNATE MANUFACTURER 1

ALTERNATE MANUFACTURER 2

ALTERNATE MANUFACTURER 3

AREAS

Issue Date: 28 JUL 2017

Revision Date: 29 JAN 2018

| | |
|---|---|
| Item Name | Electric Strike |
| Description: | 7000 Series Universal Electric Strike |
| CSI Division: | 087100 |
| Manufacturer: | ASSA ABLOY/HES Innovations |
| Model #: | 7000 Series, LBM |
| Finish: | 630, Satin Stainless Steel |
| Quality Standards: | ANSI/BHMA A156.31, Grade 1 & 2. UL 1034 burglary -resistant listed UL 294 listed |
| Lead Time: | 10-15 business days |
| Warranty: | Three year limited warranty |
| Note: | Refer to door hardware schedule for hardware locations |

## SPECIAL INSTRUCTIONS

MANUFACTURER

ASSA ABLOY

Jan McKenzie 512-585-5205 jan.mckenzie@assaabloy.com

ALTERNATE MANUFACTURER 1

ALTERNATE MANUFACTURER 2

ALTERNATE MANUFACTURER 3

AREAS

Issue Date: 28 JUL 2017

Revision Date: 29 JAN 2018

| | |
|---|---|
| Item Name | Surface Closer |
| Description: | 8000 Series Door Closer with Unitrol Arm and metal cover |
| CSI Division: | 087100 |
| Manufacturer: | ASSA ABLOY/Norton |
| Model #: | UNI8501M |
| Finish: | 689, Aluminum |
| Quality Standards: | ANSI/BHMA A156.4, Grade 1 Certified; UL/cUL listed for use on fire rated doors; UL10C listed for positive pressure fire test; complies with ADA and ANSI A117.1 |
| Lead Time: | 5-10 business days |
| Warranty: | 25 year limited warranty |
| Note: | Refer to door hardware schedule for hardware locations |

## SPECIAL INSTRUCTIONS

MANUFACTURER

ASSA ABLOY

Jan McKenzie 512-585-5205 jan.mckenzie@assaabloy.com

ALTERNATE MANUFACTURER 1

ALTERNATE MANUFACTURER 2

ALTERNATE MANUFACTURER 3

AREAS

Issue Date: 28 JUL 2017

Revision Date: 29 JAN 2018

| | |
|---|---|
| Item Name | Gasketing |
| Description: | Adhesive-Backed Fire/Smoke Gasketing |
| CSI Division: | 087100 |
| Manufacturer: | ASSA ABLOY/Pemko |
| Model #: | S88 BL |
| Finish: | Black |
| Quality Standards: | Air Infiltration Tested; Intertek Testing (Warnock Hersey); Sound Tested - ASTM E90; BHMA Certified; Smoke Tested - UL1784; Fire Rated - Edge Seals - UL10C - Positive Pressure; Underwriters Laboratory 4L10 |
| Lead Time: | 3-5 business days |
| Warranty: | 5 years limited warranty |
| Note: | Refer to door hardware schedule for hardware locations |

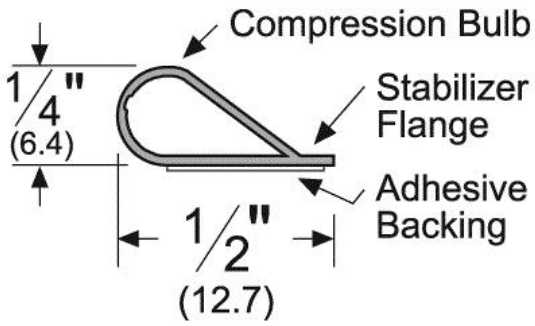


## SPECIAL INSTRUCTIONS

MANUFACTURER

ASSA ABLOY

Jan McKenzie 512-585-5205 jan.mckenzie@assaabloy.com

ALTERNATE MANUFACTURER 1

ALTERNATE MANUFACTURER 2

ALTERNATE MANUFACTURER 3

AREAS

Issue Date: 28 JUL 2017

Revision Date: 29 JAN 2018

| | |
|---|---|
| Item Name | Exit Device |
| Description: | 8800 Rim Exit Device |
| CSI Division: | 087100 |
| Manufacturer: | ASSA ABLOY/Sargent |
| Model #: | 12-8815 x ETMV |
| Finish: | US32D |
| Quality Standards: | ANSI/ BHMA A156.3 Grade 1; UL listed for panic (UL305) and fire rated (UL10C) ASTM E330, E886 & E1996 |
| Lead Time: | 5-10 business days |
| Warranty: | 5 year limited warranty |
| Note: | Refer to door hardware schedule for hardware locations |

## SPECIAL INSTRUCTIONS

MANUFACTURER

ASSA ABLOY

Jan McKenzie 512-585-5205 jan.mckenzie@assaabloy.com

ALTERNATE MANUFACTURER 1

ALTERNATE MANUFACTURER 2

ALTERNATE MANUFACTURER 3

AREAS

Issue Date: 28 JUL 2017

Revision Date: 29 JAN 2018

| | |
|---|---|
| Item Name | Exit Device |
| Description: | 8800 Rim Exit Device |
| CSI Division: | 087100 |
| Manufacturer: | ASSA ABLOY/Sargent |
| Model #: | 12-8813 x ETMV |
| Finish: | US32D |
| Quality Standards: | ANSI/BHMA A156.3 Grade 1; UL listed for panic (UL305) and fire rated (UL10C) ASTM E330, E1886 & E1996 |
| Lead Time: | 5-10 business days |
| Warranty: | 5 years limited warranty |
| Note: | Refer to door hardware schedule for hardware locations |

## SPECIAL INSTRUCTIONS

MANUFACTURER

ASSA ABLOY

Jan McKenzie 512-585-5205 jan.mckenzie@assaabloy.com

ALTERNATE MANUFACTURER 1

ALTERNATE MANUFACTURER 2

ALTERNATE MANUFACTURER 3

AREAS

Issue Date: 28 JUL 2017

Revision Date: 29 JAN 2018

| | |
|---|---|
| Item Name | Silencer |
| Description: | Rubber door silencer |
| CSI Division: | 087100 |
| Manufacturer: | ASSA ABLOY/Rockwood |
| Model #: | 608 |
| Finish: | DuraFlex Gray rubber |
| Quality Standards: | ANSI/BHMA A156.16: L03011 |
| Lead Time: | 5-10 business days |
| Warranty: | One year limited warranty |
| Note: | Refer to door hardware schedule for hardware locations |

## SPECIAL INSTRUCTIONS

MANUFACTURER

ASSA ABLOY

Jan McKenzie 512-585-5205 jan.mckenzie@assaabloy.com

ALTERNATE MANUFACTURER 1

ALTERNATE MANUFACTURER 2

ALTERNATE MANUFACTURER 3

AREAS

Issue Date: 28 JUL 2017

Revision Date:

| | |
|---|---|
| Item Name | Electronic Lock |
| Description: | Electronic Reader with mobile access |
| CSI Division: | 087100 |
| Manufacturer: | ASSA ABLOY/ Ving |
| Model #: | Essence |
| Finish: | US26D |
| Quality Standards: | EN14846, Fire 1634.1 |
| Lead Time: | 12 weeks |
| Warranty: | Two year limited warranty |
| Note: | Refer to door hardware schedule for hardware locations |

## SPECIAL INSTRUCTIONS

MANUFACTURER

ASSA ABLOY

Jan McKenzie 512-585-5205 jan.mckenzie@assaabloy.com

ALTERNATE MANUFACTURER 1

ALTERNATE MANUFACTURER 2

ALTERNATE MANUFACTURER 3

AREAS

Issue Date: 28 JUL 2017

Revision Date: 29 JAN 2018

| | |
|---|---|
| Item Name | Hinge |
| Description: | Heavy Weight Bearing Hinges |
| Manufacturer: | ASSA ABLOY/McKinney |
| Model #: | T4A3786 4-1/2" x 4-1/2" |
| Finish: | US26D, Dull Chromium |
| Quality Standards: | ANSI/BHMA A156.1, 156.7 |
| Lead Time: | 5-10 business days |
| Warranty: | One year limited warranty |
| Note: | Refer to door hardware schedule for hardware locations |

## SPECIAL INSTRUCTIONS

MANUFACTURER

ASSA ABLOY

Jan McKenzie 512-585-5205 jan.mckenzie@assaabloy.com

ALTERNATE MANUFACTURER 1

ALTERNATE MANUFACTURER 2

ALTERNATE MANUFACTURER 3

AREAS

Issue Date: 28 JUL 2017

Revision Date:

| | |
|---|---|
| Item Name | Latchset |
| Description: | Cylindrical lever locks - Passage or Closet Latch |
| CSI Division: | 087100 |
| Manufacturer: | ASSA ABLOY/Yale |
| Model #: | PB5401LN |
| Finish: | 626, Satin Chrome |
| Quality Standards: | UL 3 Hour Fire Rating; ANSI/BHMA A156.2 Series 4000, Grade 1; ANSI A117.1 Accessibility Code |
| Lead Time: | 4-6 weeks |
| Warranty: | 2 Year Limited Warranty |
| Note: | Refer to door hardware schedule for hardware locations |

## SPECIAL INSTRUCTIONS

MANUFACTURER

ASSA ABLOY

Jan McKenzie 512-585-5205 jan.mckenzie@assaabloy.com

ALTERNATE MANUFACTURER 1

ALTERNATE MANUFACTURER 2

ALTERNATE MANUFACTURER 3

AREAS

Issue Date: 28 JUL 2017

Revision Date:

| | |
|---|---|
| Item Name | Flush Bolt |
| Description: | Lever Extension Flush Bolt |
| CSI Division: | 087100 |
| Manufacturer: | ASSA ABLOY/Rockwood |
| Model #: | 555 |
| Finish: | US26D, Satin Chrome Plated |
| Quality Standards: | ANSI A156.3 Type 25 |
| Lead Time: | 5-10 business days |
| Warranty: | One year limited warranty |
| Note: | Refer to door hardware schedule for hardware locations |

## SPECIAL INSTRUCTIONS

MANUFACTURER

ASSA ABLOY

Jan McKenzie 512-585-5205 jan.mckenzie@assaabloy.com

ALTERNATE MANUFACTURER 1

ALTERNATE MANUFACTURER 2

ALTERNATE MANUFACTURER 3

AREAS

Issue Date: 28 JUL 2017

Revision Date:

| | |
|---|---|
| Item Name | Lockset |
| Description: | 8000 Series lever Storeroom or Closet Lock |
| CSI Division: | 087100 |
| Manufacturer: | ASSA ABLOY/Yale |
| Model #: | PBR 8805FL |
| Finish: | 626, Satin Chrome |
| Quality Standards: | UL 3 Hour Fire Rating; ANSI/BHMA A156.2 Series 4000, Grade 1; ANSI A117.1 Accessibility Code |
| Lead Time: | 4-6 weeks |
| Warranty: | 2 Year Limited Warranty |
| Note: | Refer to door hardware schedule for hardware locations |

## SPECIAL INSTRUCTIONS

MANUFACTURER

ASSA ABLOY

Jan McKenzie 512-585-5205 jan.mckenzie@assaabloy.com

ALTERNATE MANUFACTURER 1

ALTERNATE MANUFACTURER 2

ALTERNATE MANUFACTURER 3

AREAS

Issue Date: 28 JUL 2017

Revision Date:

| | |
|---|---|
| Item Name | Gasketing |
| Description: | Heavy Duty perimeter gasketing |
| CSI Division: | 087100 |
| Manufacturer: | ASSA ABLOY/Pemko |
| Model #: | 2891APK |
| Finish: | A mill finish |
| Quality Standards: | AIT; BHMA Certified; Smoke Tested-UL1784; Fire Rated-UL10C-Positive Pressure; UL 4L 10; GreenGuard Certified |
| Lead Time: | 3-5 business days |
| Warranty: | 5 years limited warranty |
| Note: | Refer to door hardware schedule for hardware locations |

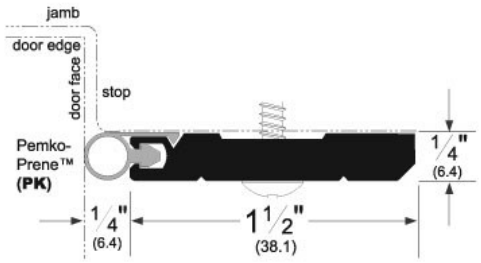


## SPECIAL INSTRUCTIONS

MANUFACTURER

ASSA ABLOY

Jan McKenzie 512-585-5205 jan.mckenzie@assaabloy.com

ALTERNATE MANUFACTURER 1

ALTERNATE MANUFACTURER 2

ALTERNATE MANUFACTURER 3

AREAS

Issue Date: 28 JUL 2017

Revision Date:

| | |
|---|---|
| Item Name | Astragal |
| Description: | Overlapping Astragal |
| CSI Division: | 087100 |
| Manufacturer: | ASSA ABLOY/Pemko |
| Model #: | 357 SP |
| Finish: | A mill finish |
| Quality Standards: | AIT; BHMA Certified; Fire Rated-UL10C-Positive Pressure; UL 4L 10; GreenGuard Certified |
| Lead Time: | 3-5 business days |
| Warranty: | 5 years limited warranty |
| Note: | Refer to door hardware schedule for hardware locations |

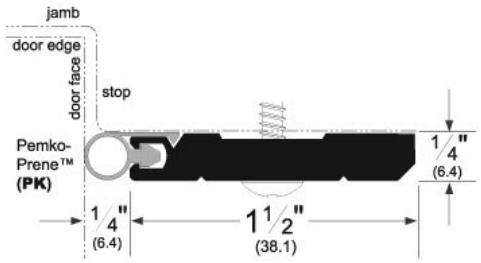


## SPECIAL INSTRUCTIONS

MANUFACTURER

ASSA ABLOY

Jan McKenzie 512-585-5205 jan.mckenzie@assaabloy.com

ALTERNATE MANUFACTURER 1

ALTERNATE MANUFACTURER 2

ALTERNATE MANUFACTURER 3

AREAS

Issue Date: 28 JUL 2017

Revision Date:

| | |
|---|---|
| Item Name | Surface Closer |
| Description: | 8000 Series Door Closer |
| CSI Division: | 087100 |
| Manufacturer: | ASSA ABLOY/Norton |
| Model #: | CLP8501TM |
| Finish: | 689 |
| Quality Standards: | ANSI/BHMA A156.4, Grade 1 Certified; UL/cUL listed for use on fire rated doors; UL10C positive pressure; complies with ADA and ANSI A117.1 |
| Lead Time: | 5-10 business days |
| Warranty: | 25 year limited warranty |
| Note: | Refer to door hardware schedule for hardware locations |

## SPECIAL INSTRUCTIONS

MANUFACTURER

ASSA ABLOY

Jan McKenzie 512-585-5205 jan.mckenzie@assaabloy.com

ALTERNATE MANUFACTURER 1

ALTERNATE MANUFACTURER 2

ALTERNATE MANUFACTURER 3

AREAS

Issue Date: 28 JUL 2017

Revision Date:

| | |
|---|---|
| Item Name | Lockset |
| Description: | 5400 Series lever lock |
| CSI Division: | 087100 |
| Manufacturer: | ASSA ABLOY/Yale |
| Model #: | PB5407LN |
| Finish: | 626, Satin Chrome |
| Quality Standards: | UL 3 Hour Fire Rating; ANSI/BHMA A156.2 Series 4000, Grade 1; ANSI A117.1 Accessibility Code |
| Lead Time: | 4-6 weeks |
| Warranty: | 2 Year Limited Warranty |
| Note: | Refer to door hardware schedule for hardware locations |

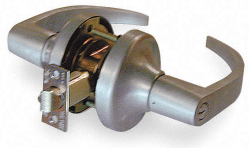

## SPECIAL INSTRUCTIONS

MANUFACTURER

ASSA ABLOY

Jan McKenzie 512-585-5205 jan.mckenzie@assaabloy.com

ALTERNATE MANUFACTURER 1

ALTERNATE MANUFACTURER 2

ALTERNATE MANUFACTURER 3

AREAS

Issue Date: 28 JUL 2017

Revision Date:

| | |
|---|---|
| Item Name | Exit Device |
| Description: | RIM Exit Device |
| CSI Division: | 087100 |
| Manufacturer: | ASSA ABLOY/Sargent |
| Model #: | 12-NB8715 x ETG |
| Finish: | US32D |
| Quality Standards: | ANSI/ BHMA A156.3 Grade 1; UL listed for panic (UL305) and fire rated (UL10C) ASTM E330, E886 & E1996 |
| Lead Time: | 5-10 business days |
| Warranty: | 5 year limited warranty |
| Note: | Refer to door hardware schedule for hardware locations |

## SPECIAL INSTRUCTIONS

MANUFACTURER

ASSA ABLOY

Jan McKenzie 512-585-5205 jan.mckenzie@assaabloy.com

ALTERNATE MANUFACTURER 1

ALTERNATE MANUFACTURER 2

ALTERNATE MANUFACTURER 3

AREAS

Issue Date: 28 JUL 2017

Revision Date:

| | |
|---|---|
| Item Name | Electromagnetic Holder |
| Description: | Electromagnetic Holder |
| CSI Division: | 087100 |
| Manufacturer: | ASSA ABLOY/Rixson |
| Model #: | FM996 |
| Finish: | 689 |
| Quality Standards: | ANSI/ C00011 |
| Lead Time: | 5-10 business days |
| Warranty: | One year limited |
| Note: | Refer to door hardware schedule for hardware locations |

## SPECIAL INSTRUCTIONS

MANUFACTURER

ASSA ABLOY

Jan McKenzie 512-585-5205 jan.mckenzie@assaabloy.com

ALTERNATE MANUFACTURER 1

ALTERNATE MANUFACTURER 2

ALTERNATE MANUFACTURER 3

AREAS

Issue Date: 28 JUL 2017

Revision Date:

| | |
|---|---|
| Item Name | Meeting Stiles |
| Description: | Meeting Stiles |
| CSI Division: | 087100 |
| Manufacturer: | ASSA ABLOY/Pemko |
| Model #: | 297AS |
| Finish: | A mill finish |
| Quality Standards: | AIT; Intertek Testing; Sound Tested-ASTM E90; BHMA Certified; Smoke Tested UL1784; Fire Rated-UL10C PP, UL4L10 |
| Lead Time: | 3-5 Business Days |
| Warranty: | 5 Year limited warranty |
| Note: | Refer to door hardware schedule for hardware locations |

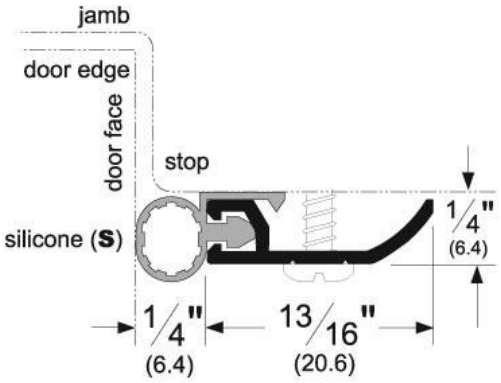


## SPECIAL INSTRUCTIONS

MANUFACTURER

ASSA ABLOY

Jan McKenzie 512-585-5205 jan.mckenzie@assaabloy.com

ALTERNATE MANUFACTURER 1

ALTERNATE MANUFACTURER 2

ALTERNATE MANUFACTURER 3

AREAS

Issue Date: 28 JUL 2017

Revision Date:

| | |
|---|---|
| Item Name | Electronic Lock with Exit Device |
| Description: | Electronic Lock with Mobile Access and RIM Exit Device |
| CSI Division: | 087100 |
| Manufacturer: | ASSA ABLOY/VingCard/Sargent |
| Model #: | Signature RFID 4 Switch 3G Exit Device 80 |
| Door Handle: | Straight |
| Finish: | US32D/Satin Chrome |
| Quality Standards: | EN14846. Fire 1634.1<br>ANSI/ BHMA A156.3 Grade 1; UL listed for panic (UL305) and fire rated (UL10C) ASTM E330, E886 & E1996 |
| Lead Time: | 12 Weeks |
| Warranty: | 2 year limited warranty |
| Note: | Refer to door hardware schedule for hardware locations |

## SPECIAL INSTRUCTIONS

MANUFACTURER

ASSA ABLOY

Jan McKenzie 512-585-5205 jan.mckenzie@assaabloy.com

ALTERNATE MANUFACTURER 1

ALTERNATE MANUFACTURER 2

ALTERNATE MANUFACTURER 3

AREAS

Public Space

Backyard

Issue Date: 28 JUL 2017

Revision Date:

| | |
|---|---|
| Item Name | Exit Device |
| Description: | RIM Exit Device |
| CSI Division: | 087100 |
| Manufacturer: | ASSA ABLOY/Sargent |
| Model #: | AD8504 Less Pull |
| Finish: | US32D |
| Quality Standards: | ANSI/ BHMA A156.3 Grade 1 |
| Lead Time: | 5-10 business days |
| Warranty: | 5 year limited warranty |
| Note: | Refer to door hardware schedule for hardware locations |

## SPECIAL INSTRUCTIONS

MANUFACTURER

ASSA ABLOY

Jan McKenzie 512-585-5205 jan.mckenzie@assaabloy.com

ALTERNATE MANUFACTURER 1

ALTERNATE MANUFACTURER 2

ALTERNATE MANUFACTURER 3

AREAS

Public Space

Meeting (Tactic)

Issue Date: 14 FEB 2019

Revision Date:

| | |
|---|---|
| Item Name | Electromagnetic Holder |
| Description: | Electromagnetic Holder |
| Manufacturer: | ASSA ABLOY/Rixson |
| Model #: | FM998 |
| Finish: | 689 |
| Quality Standards: | ANSI/C00011 |
| Warranty: | Two year limited |
| Note: | Interface with fire alarm panel. Refer to door hardware schedule for hardware locations. |

## SPECIAL INSTRUCTIONS

MANUFACTURER

ASSA ABLOY

Jan McKenzie 512-585-5205 jan.mckenzie@assaabloy.com

ALTERNATE MANUFACTURER 1

ALTERNATE MANUFACTURER 2

ALTERNATE MANUFACTURER 3

AREAS

# Door Hardware
## Cutsheets

# Five Knuckle Standard Weight Series

**Recommended for standard weight, medium frequency doors, or doors with closing devices.**

- Use for common flush door/frame/wall applications
- For Beveled Edge, where doors are beveled on hinge side, specify TA4314 or TA4714
- For available finishes see page 29

TA2314
TA2714

| No. | ANSI Cross Reference | Base Material | Weight |
|---|---|---|---|
| TA2314 | A5112 | Stainless | STD |
| TA2314 | A2112 | Brass | STD |
| TA2714 | A8112 | Steel | STD |

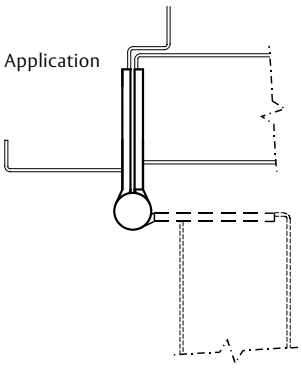


**Specifications**

| Inches | mm | Gauge | No. of Holes | Fasteners | |
|---|---|---|---|---|---|
| | | | | Machine | Wood |
| 3 1/2" x 3 1/2"* | 88.9 x 88.9 | .123 | 6 | 1/2 x 10-24 | 1 x 10 |
| 4" x 4"* | 101.6 x 101.6 | .130 | 8 | 1/2 x 12-24 | 1 1/4 x 12 |
| 4 1/2" x 4" | 114.3 x 101.6 | .134 | 8 | 1/2 x 12-24 | 1 1/4 x 12 |
| 4 1/2" x 4 1/2" | 114.3 x 114.3 | .134 | 8 | 1/2 x 12-24 | 1 1/4 x 12 |
| 5" x 4 1/2"* | 127 x 114.3 | .146 | 8 | 1/2 x 12-24 | 1 1/4 x 12 |
| 5" x 5"* | 127 x 127 | .146 | 8 | 1/2 x 12-24 | 1 1/4 x 12 |
| 6" x 6"* | 152.4 x 152.4 | .160 | 10 | 1/2 x 1/4-20 | 1 1/2 x 14 |

* Not available in Brass base material.

**Options:**

| Code | Description |
|---|---|
| **NRP** | Non-Removable Pin |
| **TB** | Ball Bearing |
| **TCA** | Concealed Bearing |
| **RC** | Round Corner – 1/4" radius furnished unless specified otherwise |
| **HT** | Hospital Tip |
| **BT** | Ball Tip |
| **ST** | Steeple Tip |
| **SSF** | Safety Stud Feature |
| **QC** | ElectroLynx® Hinge – 2, 4, 6, 8, 10 or 12 wire available |
| **CC** | Concealed Circuit – 2, 4, 6, 8, 10 or 12 wire available |
| **CC-18** | Concealed Circuit – 2, 4, 6, 8 or 10 wire available (2-18AWG wires and the remainder 28AWG wires) |
| **MM** | Magnetic Monitoring |



Copyright © 2012, 2015, McKinney Products Company, an ASSA ABLOY Group company. All rights reserved.
Reproduction in whole or in part without the express written permission of McKinney Products Company is prohibited.

# VingCard Essence
## Electronic Lock

**VingCard Essence revolutionizes the electronic lock industry by housing all lock components, including the reader and mobile access board, inside the door and therefore, reaching the maximum minimalistic expression, the true essence of an electronic lock.**

**VingCard Essence is always delivered as Mobile Access ready. With Mobile Access board included inside the reader, your property is ready for using the mobile phone as guest room key whenever required.**

## FEATURES

: Solid Stainless Steel or brass handles with self-lubricating long life bearings.
: 3-point steel latch construction with an antifriction mechanism.
: Case hardened full 1-inch (ANSI) throw deadbolt.
: Panic release function – the deadbolt and latch are automatically retracted by inside handle for easy egress in emergency situations.
: ADA compliant (users with physical disabilities).
: Future proof re-programmable FLASH lock memory.
: Powered by three (3) AA batteries that provide up to 2 years normal life (depending on door traffic and online/mobile access functionality).
: Compatible with Visionline Software platform.
: 2000 event audit trail.
: Optional high security mechanical override (key cylinder).
: Mobile Access board included in reader.
: RFID Specifications:
- 13,56MHz technology
- compatible with the following standards:
  - ISO 14.443 A (MIFARE including Desfire)
  - ISO 14.443 B
  - ISO 15.693

## DIMENSIONS

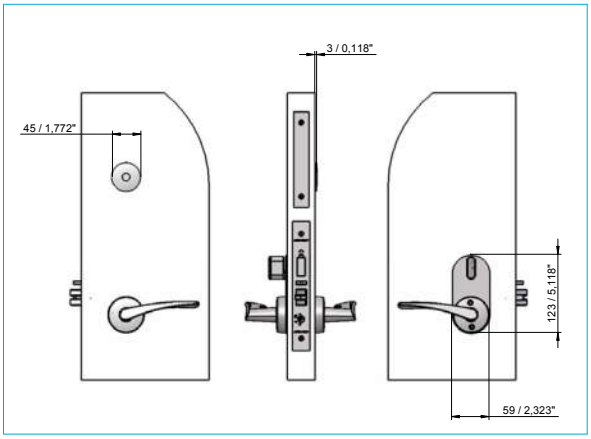


ASSA ABLOY

ASSA ABLOY Hospitality

The global leader in door opening solutions

**HW-003**

Revision Date:

## TECHNICAL DATA

| | |
|---|---|
| Power | 4,5 V DC (3 x AA alkaline batteries). |
| Battery location | Inside of the door in electronics module. |
| Material | Handles: Stainless steel quality SUS304<br>RFID cover: Polycarbonate UL94V0 (Makrolon 6555). |
| Metal finishes | Satin Chrome (Stainless Steel with PVD), Polished Chrome (Stainless Steel with PVD), Satin Brass (Stainless Steel with PVD), Polished Brass (Stainless Steel with PVD), Light Bronze, Velour Nickel and US Antique Dark. |
| Standard plastic color | Black and white. |
| Handle options in standard range | Straight, Functional ANSI, Wing. Also compatible with 20 different Valli&Valli design handles. |
| Emergency opening options | Electronic emergency opening with service unit and optional mechanical cylinder. |
| User interface | 3 colored light pipe shaped as ring around the reader (green, red, yellow). |
| Locking mechanism | Electro-mechanical locking mechanism located in the lockcase. |
| Door thickness | 34 - 120 mm / 1,34 - 4,72 Inches. |
| System software compatibility | Visionline. |
| Online compatibility | Wireless (based on ZigBee protocol) in Visionline. |
| Storage temperature | 0-70 °C / 32-158 °F: non-condensing environment. |
| Tested operating temperature | Tested from -25 °C to 70 °C ( -13 °F to 158 °F), according to IEC 60068-2. |
| Certifications | European EMC, LVD and R&TTE Directives.<br>Approved according to EN14846.<br>Fire approved according to EN 1634-1.<br>Fire approved according to UL (timber doors). |
| Supported RFID standards | ISO 14.443 A, ISO 14.443 B, ISO 15.693 |
| Mobile Access support | Mobile Access board included in reader unit. |

ANSI DB lockcase:

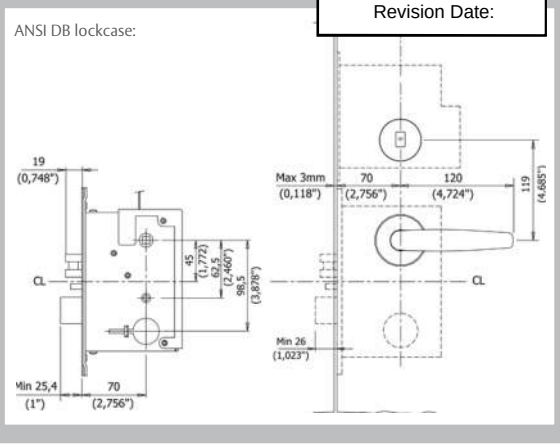


ANSI DA lockcase:

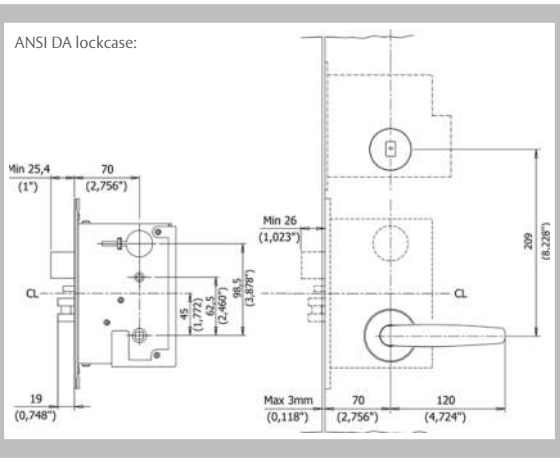


EURO lockcase:

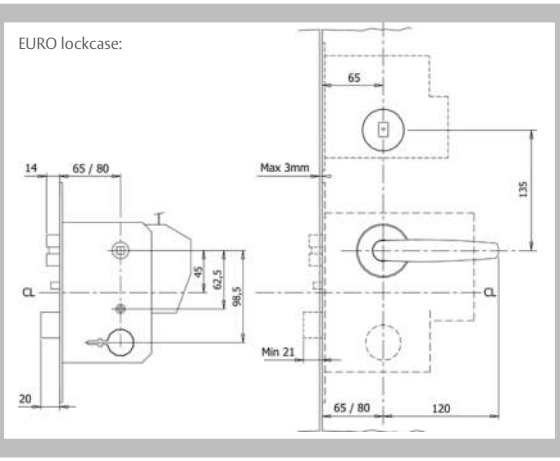


## LOCKCASE DIMENSIONS

| | |
|---|---|
| ANSI lock case variants | ANSI DA, ANSI DB (both available in the following versions:4-switch, Auto deadbolt (ADB) Australia version (AUS) and Japan (JPN) version). |
| ANSI lock case widths | 25 mm / 0,98 inches, 28 mm / 1,10 inches, 32 mm / 1,26 inches. |
| ANSI backset | 70 mm / 2,76 inches. |
| EURO lock case variants | EURO, EURO ADB, EURO MPA. |
| EURO lock case widths | 20 mm / 0,79 inches, 22 mm / 0,87 inches, 24 mm / 0,94 inches. |
| EURO backsets | 65 mm / 2,56 inches, 80 mm / 3,15 inches. |



Art no: 4819065 | Doc. Printed: 12/2016 | Copyright ASSA ABLOY ©
Specifications may change without notice | Note: Image colors in this brochure may differ from actual colors

**HW-003**

Revision Date:

| REVISIONS | | | |
|---|---|---|---|
| REV | DESCRIPTION | DATE | BY |

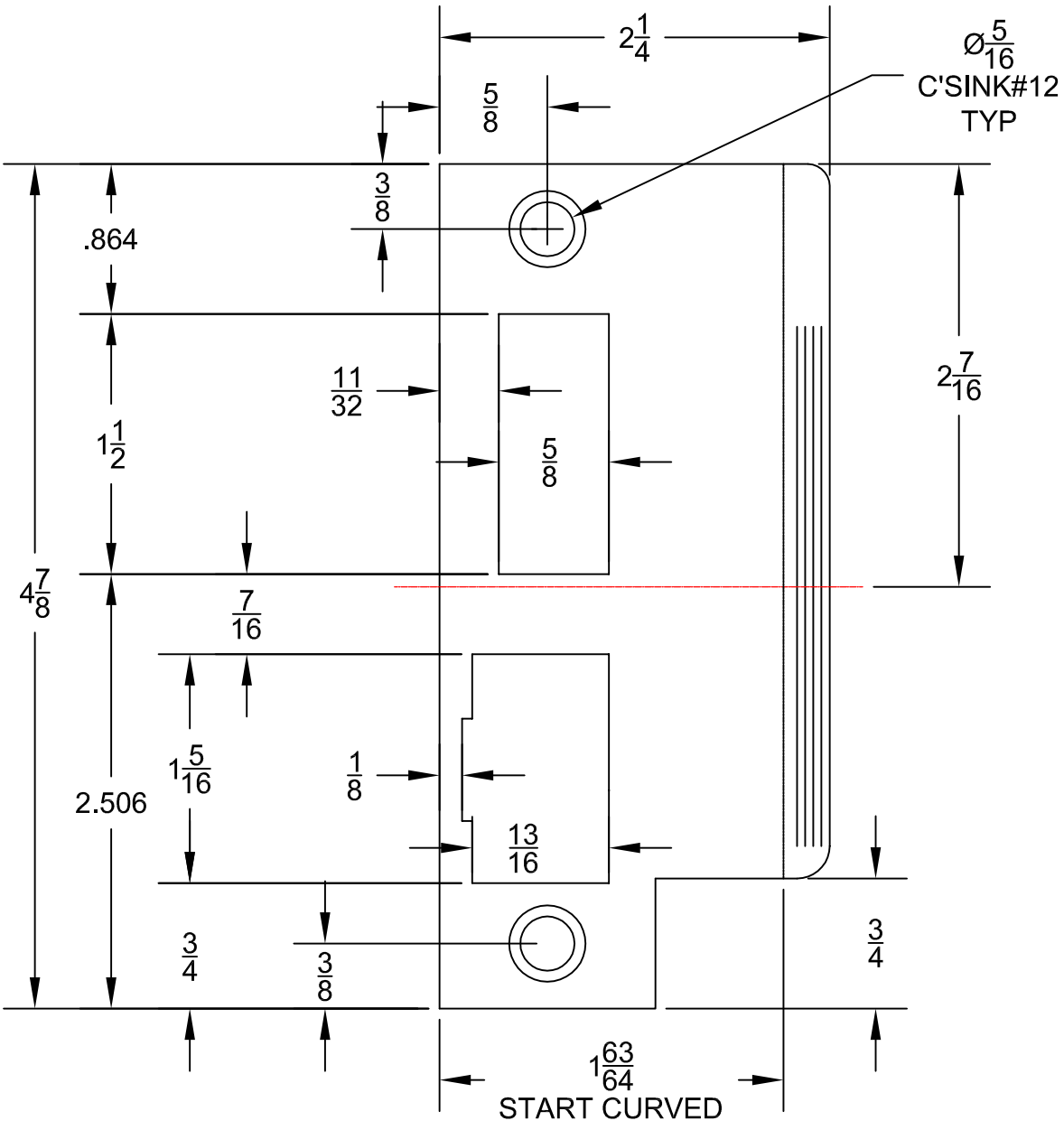


ACCURATE LOCK AND HARDWARE CO.
ONE ANNIE PLACE
STAMFORD, CT 06902

TITTLE: Vingcard Std Classic strike

CUST/PO NO: ASSA PO#PO00012255-1

| SIZE | DRAWN BY: | SCALE: |
|---|---|---|
| A | EDWIN MAEDA | 1=1 |
| | DATE: 3/15/2014 | |

| MAT'L: | FINISH: | QTY: |
|---|---|---|
| 3/32" TK SS | US32D | 46RH,36LH |

TOLERANCES – UNLESS OTHERWISE NOTED:

| | |
|---|---|
| FRACTIONAL: | ±0.03 " |
| 2–PLACE DECIMAL: | ±0.01 " |
| 3–PLACE DECIMAL: | ±0.005 " |
| ANGULAR: | ±1° |

NOTES: NEXT ASS'Y:

APPROVAL

DWG. NO. VC-Classic 4 7/8"

REV

F\Mark\AccCust\assa\Ving standard strike

Our collection of door stops features our DuraFlex bumper material that outlasts other manufacturers' rubber bumpers many times over. It stays resilient and colorfast for years. These new styles offer solutions for wall, floor and baseboard stops. The door stops are made from solid brass and available in most architectural finishes.

## Door Stops

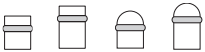

### Floor Mounted Stops

| Stop No. | Description | Base | Projection |
|---|---|---|---|
| RM850 | Short-Square Top | 1¼" | 1½" |
| RM851 | Tall-Square Top | 1¼" | 2½" |
| RM855 | Short-Round Top | 1¼" | 1¼" |
| RM856 | Tall-Round Top | 1¼" | 2¼" |

### Wall Mounted Stops

| Stop No. | Bumper | Base | Projection |
|---|---|---|---|
| RM860 | Convex | 1⅛" | 1⅛" |
| RM861 | Concave | 1⅛" | 1⅛" |

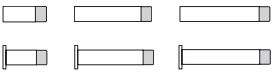

### Base Board Mounted Stops

| Stop No. | Base Plate | Base | Projection |
|---|---|---|---|
| RM870 | No | ¾" | 1¼" |
| RM871 | No | ¾" | 3¼" |
| RM872 | No | ¾" | 3¼" |
| RM875 | Yes | 1" | 1¼" |
| RM876 | Yes | 1" | 3¼" |
| RM877 | Yes | 1" | 3¼" |

**Base Materials:** Brass, stainless steel

HW-016

Revision Date:

# 8000 SERIES

## Architectural Door Closer

Norton®

ASSA ABLOY

ASSA ABLOY, the global leader in door opening solutions

## OVERVIEW

### Cutaway View

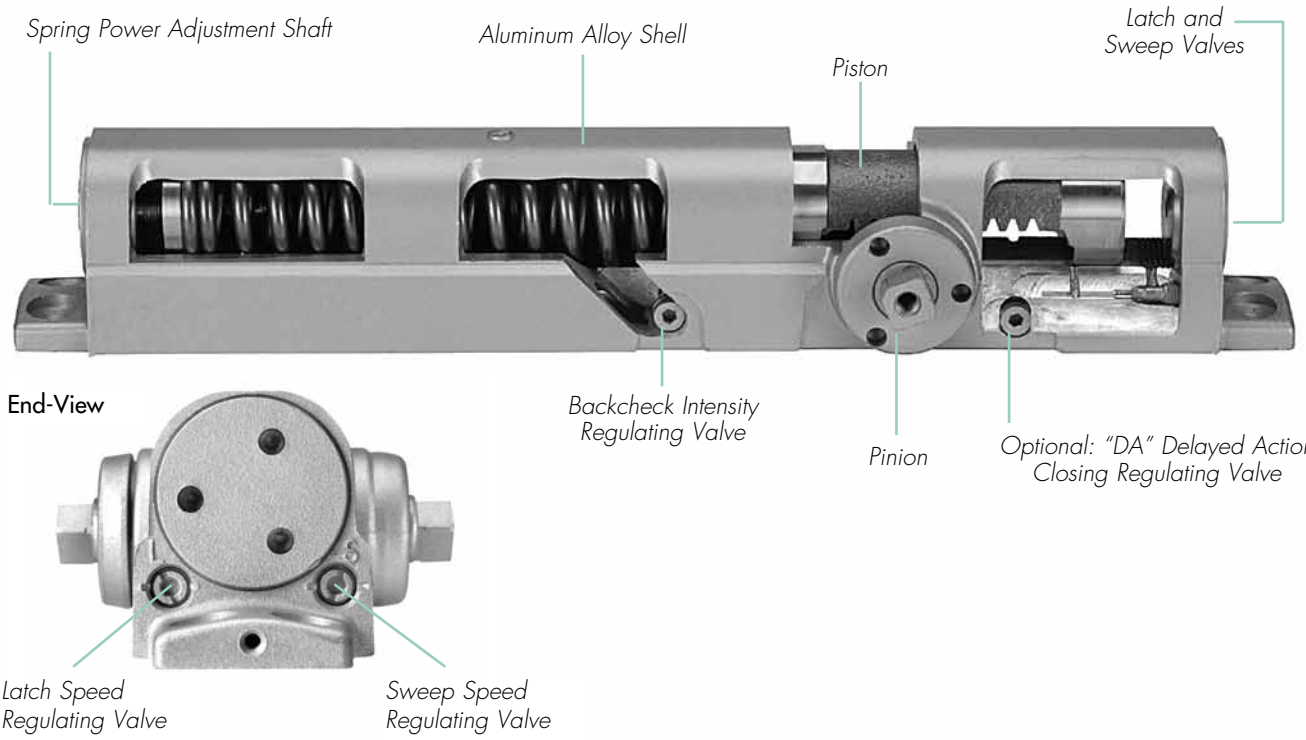


## COMPLIANCE STANDARDS

- ANSI/BHMA A156.4, Grade 1 certified
- UL / cUL listed for use on fire rated doors
- UL10C listed for positive pressure fire test
- 8301 and 8501 door closers are designed to comply with requirements for the Americans with Disabilities Act (A.D.A) and ANSI standard A117.1
- This product is manufactured in an ISO 9001 facility

**CAUTION: Door Closers for Low Opening Force Applications:**
Door closers installed in openings required to meet the requirements of The Americans with Disabilities Act or ANSI/BHMA Standard A117.1, when adjusted to meet those requirements, may not provide adequate closing power to dependably close and latch the door.


Copyright © 2002-2016 Yale Security Inc., an ASSA ABLOY Group company. All rights reserved.
Reproduction in whole or in part without the express written permission of Yale Security Inc. is prohibited.

## HOW TO ORDER

**HW-016**
Revision Date:

For optimum protection of door and frame assemblies, always use auxiliary wall, floor, or overhead door stop.

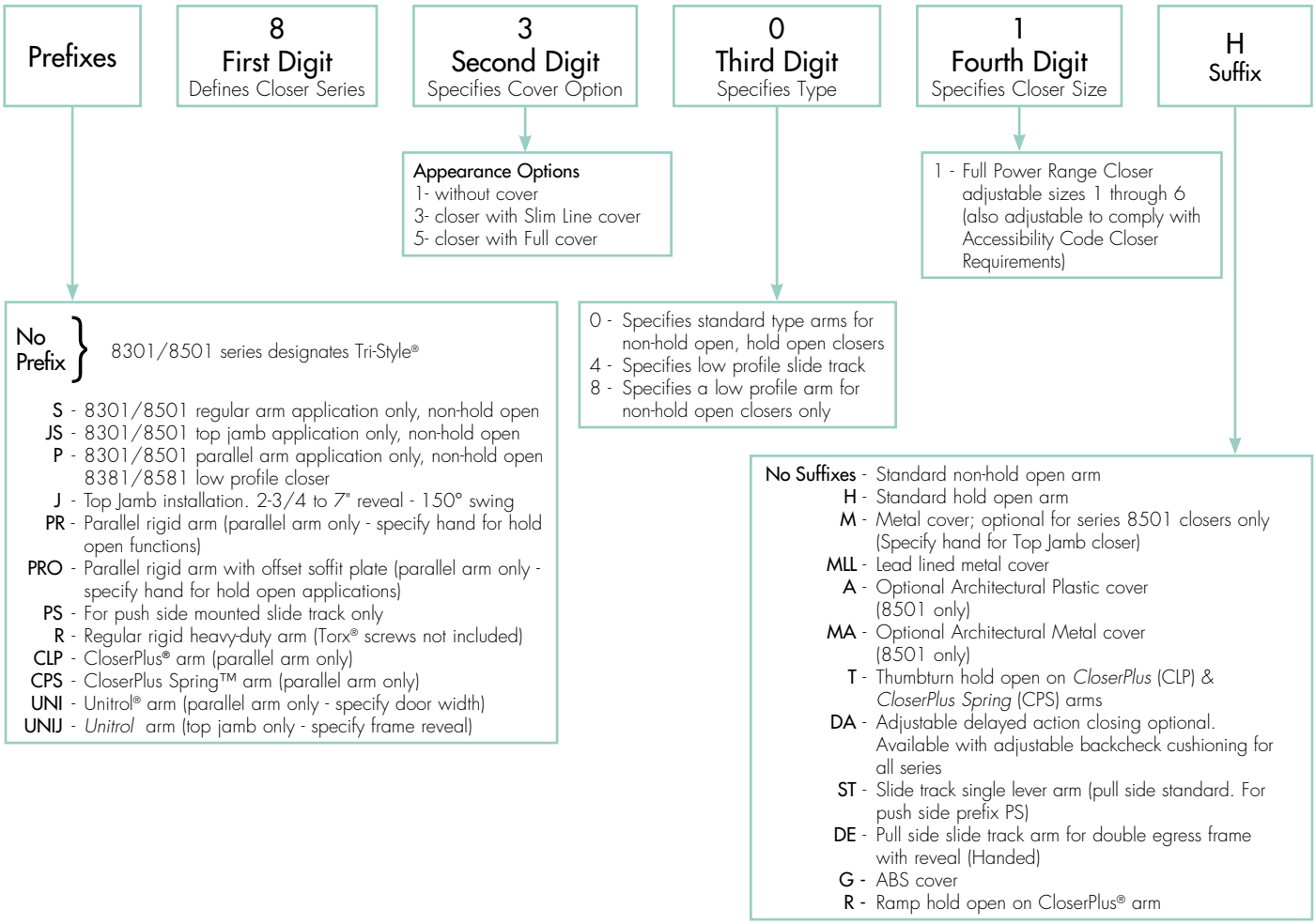


Notes:
- Warranty becomes void if door closer is installed on the exterior side of a door in the exterior wall of a building.
- It is strongly recommended, and required on fire door assemblies, that doors having a door closer be hung on ball bearing or anti-friction hinges or pivots; unless an alternate method is identified in the door manufacturer's listing.
- Failure to use the correct type and size fasteners may void factory warranty.
- Fasteners for fire/smoke door assemblies must conform to NFPA 80. In some applications additional fasteners may be mandated by NFPA 80 that are not shipped with standard *Norton* product, such as sleeve-nuts/sex nuts or through-bolts and grommet nuts.
- Sizing charts provided on pages 13-25 are based on 1-3/4" (44mm) x 7' (2.13m) standard weight doors swinging to 110°. Other conditions (such as door height or weight; or wind/draft conditions) may require a larger size closer.


Copyright © 2002-2016 Yale Security Inc., an ASSA ABLOY Group company. All rights reserved.
Reproduction in whole or in part without the express written permission of Yale Security Inc. is prohibited.

**HW-016**
Revision Date:

## FEATURES

### Aluminum Alloy Housing
Closer bodies are constructed of a special aluminum alloy, carefully selected to accommodate interactive steel components and operating conditions.

### Rack & Pinion Operation
Provides a smooth constant control of the door through its full opening and closing cycle. 180° door swing can be achieved when door, frame, hardware and arm function do not interfere.

### Non-handed
With few exceptions all series 8301/8501 door closers are non-handed and can be installed on either right- or left-hand swing doors. Pinion shaft extends vertically through the closer body in both directions. Some options, as noted on pages 6-7, will require that the hand of the closer be specified.

### Sweep Speed Control Valve
Allows adjustment of door speed from the door's full open position down to approximately 10° from the closed position.

### Latch Speed Control Valve
Allows adjustment of door speed from approximately 10° down to the door's fully closed position.

### Tri-Style®
8301/8501 comes with screws, brackets and soffit plates to allow for regular, top jamb, and parallel arm installations.

### Adjustable Backcheck Valve
Provides control of the door in the opening cycle, beginning at approximately 75° of door opening. It cushions the door opening when the door is forcibly opened beyond its pre-adjusted limits.

### Standard Molded Covers
Molded of high-impact U.L. listed material. These covers are non-handed for all applications.

### Warranty
Limited 25-year warranty for defects and life of the building on the aluminum housing.

### Closer Fluid
NorGlide® closer fluid is a specially formulated multi-viscosity hydraulic fluid that contains lubricity and anti-oxidation agents that provide optimum performance and efficiency. This fluid complements the interaction of the door closer's aluminum housing with its steel and brass components, while maintaining stable viscosity to allow the door closer to perform in temperatures ranging from extremely high to as low as -40° F.

### Door Closer Power Options

**Series 8301/8501 Multi-Sized Door Closer**
Adjustable through the power range of sizes 1 through 6; as outlined in ANSI/BHMA specification A156.4 option PT 4H.

Closers will also comply with the opening force requirements as outlined in the Americans with Disabilities Act (ADA) and ANSI/BHMA standard A117.1 for interior doors.

## OPTIONAL FEATURES COVERS

### Optional Metal Cover
This steel cover is non-handed for regular and parallel arm applications, but is handed for top jamb applications. Cover is available in sprayed or plated finishes.

### Optional Architectural Covers *
**Plastic** Architectural plastic covers are molded of high-impact U.L. listed material. They are non-handed and available in sprayed finishes.

**Metal** The architectural metal covers are steel and non-handed for all applications. These covers are available in sprayed or plated finishes.

### Optional ABS Cover
Consult factory for details


Copyright © 2002-2016 Yale Security Inc., an ASSA ABLOY Group company. All rights reserved.
Reproduction in whole or in part without the express written permission of Yale Security Inc. is prohibited.

## OPTIONAL FEATURES

### Adjustable Delayed Action Closing

An optional hydraulic feature that adds a third speed range to the closing cycle. This feature becomes effective when the door is opened and released at any point beyond 70°. The amount of time delay depends upon the combination of the angle of door release and valve adjustment. The valve can be adjusted with a 1/8" (3mm) hex key from no delay time up to maximum delay times of:

| Door Opened | Approximate Time of Delay Cycle |
|---|---|
| 180° | 4-5 minutes |
| 120° | 2-3 minutes |
| 90° | 25-30 seconds |

### Pressure Relief Safety Valve

The delayed action hydraulic system contains a pressure relief valve. Any time the door is forced toward the closed direction while it is in the closing cycle, the valve will open and permit the door to close. This prevents damage to door, frame and closer.

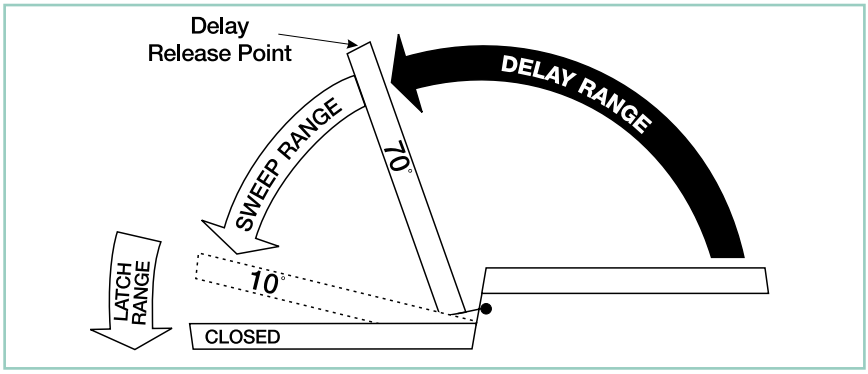


### Suggested Applications

Delayed Action closing allows slow-moving traffic to clear the opening before the door closer's normal closing cycle begins. This feature can be helpful in health care facilities such as hospitals and nursing homes. It provides sufficient time for persons on crutches or in wheelchairs to pass through a door without concern of it closing. At the same time, it can accommodate the facility's staff with movement of food service carts, beds, and other wheeled traffic.

Use of delayed action closers on many doors throughout industrial and commercial buildings can also assist the flow of traffic. Locations where additional time to clear the opening is advantageous are doors between office and factory/warehouse facilities, doors to workshops or laboratories, to kitchen and food processing areas, etc.

## OPTIONAL FEATURES ARMS

### Non-Hold Open

Self-closes door every time door is opened. Auxiliary stop (by others) required except when using the CloserPlus®, CloserPlus Spring™ or Unitrol® arms.

### Hold Open

Achieved by means of friction or ball and detent/ roller. Friction hold open has a range of 90° to 180° using template location and mechanical adjustment.

Ball and detent or roller hold open is effective in a range of 85° to 110°.

Hold open arm door closers are not permitted to be used on fire door assemblies.

### Door Opening Degrees

| Arm Function | Regular Arm, Top Jamb Parallel Arm | Parallel Rigid Arm | CloserPlus® Parallel Arm | CloserPlus Spring™ Parallel Arm | Unitrol® Parallel Arm | *Unitrol* Top Jamb | Low Profile Regular, Parallel | Slide Track |
|---|---|---|---|---|---|---|---|---|
| Non-Hold Open | ✓ | ✓ | 85° to 110° | 85° to 110° | 85° to 110° | 85° to 110° | ✓ | 85° to 110°/180° |
| Hold Open | 90° to 180° | 85° to 180° | 85° to 110° | 85° to 110° | 85° to 110° | 85° to 110° | N/A | 85° to 110° |

✓=180° trim and template permitting



Copyright © 2002-2016 Yale Security Inc., an ASSA ABLOY Group company. All rights reserved.
Reproduction in whole or in part without the express written permission of Yale Security Inc. is prohibited.

## APPLICATIONS

**HW-016**
Revision Date:

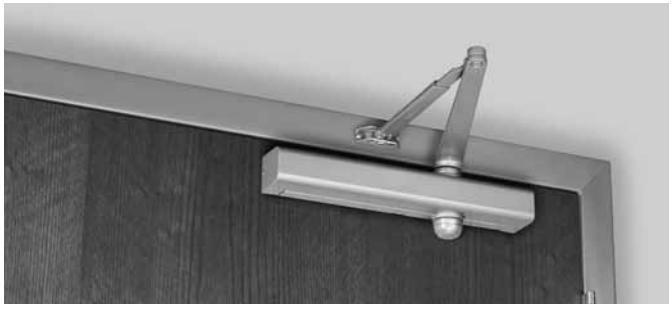

8301 - slim cover

### Regular Arm

This is the only pull-side application where a double lever arm is used. It is the most power-efficient application for a door closer. Sufficient frame, door and/or ceiling clearance must be considered.

8501 - full cover

Since the arm assembly projects directly out from the frame, this application may present an aesthetics issue or be prone to vandalism.

### Top Jamb

For efficiency reasons this application provides the best alternative to the regular arm application. There must be sufficient frame face and/or ceiling clearance for this application. It requires a top rail on the door of just 2-1/4" (57mm). This application provides the best door control for doors in exterior walls that swing out of a building.

The entire door closer and arm assembly project from the frame, similar to the regular arm application, where matters of appearance and malicious abuse can be of concern. Consideration must be given to depth of frame reveal.

### Parallel Arm

This application provides the most appealing design appearance for a surface-mounted door closer having a double lever arm. This also makes it beneficial in vandalism-prone areas. It is on the push side of the door and the arm assembly extends almost parallel to the door. In the closed position, there is very little or no hardware projecting beyond the frame face in most situations.

Due to the geometry of the arm it is approximately 25% less power efficient than a regular arm application. The entire closer and arm assembly are mounted below the frame stop. Top rail clearance dimensions will vary based on the type of cover used. (See pg.15)



Copyright © 2002-2016 Yale Security Inc., an ASSA ABLOY Group company. All rights reserved.
Reproduction in whole or in part without the express written permission of Yale Security Inc. is prohibited.

## APPLICATIONS

**HW-016**
Revision Date:

Non-hold open arm shown

### Parallel Rigid Arm

An enhanced variation of the standard parallel arm assembly that is intended for use in heavy traffic areas where auxiliary door stops are installed.

Hold open available - specify hand when ordering.

Non-hold open arm shown

### CloserPlus® Arm

Similar to the Parallel Rigid arm, this arm incorporates a stop at the arm's soffit plate to dead stop the door at a predetermined degree of door swing between 85° and 110°, in 5° increments. Prior to dead stop the door closer's backcheck feature slows the door speed to reduce the impact of the stop action.

The *CloserPlus* Arm is intended for use where an auxiliary door stop cannot be utilized and no more than moderate abuse is anticipated. Where more extreme conditions are expected, use of a *Unitrol* arm is recommended.

Available with or without hold open. (Hold open strength is adjustable.)

Non-hold open arm shown

### CloserPlus Spring™ Arm

This arm has all the characteristics of the *CloserPlus* arm with an additional steel buffer spring that provides greater protection at the end of the door opening cycle.

For extreme conditions, use of a *Unitrol* arm is recommended. Available with or without hold open.

### CloserPlus Ramp™

The CLP-R uses a patent pending ramp and plunger design that easily slides into place reducing wear often seen on traditional hold open arms. Ideal for applications where the door will constantly be pulled out of hold open.


Copyright © 2002-2016 Yale Security Inc., an ASSA ABLOY Group company. All rights reserved.
Reproduction in whole or in part without the express written permission of Yale Security Inc. is prohibited.

## APPLICATIONS

### Regular Rigid Arm
This double lever arm features a non-adjustable secondary arm. Orbitally riveted joints prevent tampering or disassembly. Prefix "R" to model number. Available non-hold open only.

### Parallel Rigid Offset Arm
This heavy-duty parallel rigid arm provides additional vertical clearance. It is well suited for applications where weather-stripping or other hardware prevents the use of the standard Parallel Rigid (PR) soffit plate. The non-hold open and hold arms allow 1-1/4" clearance. When used in conjunction with a #6891 spacer block, the PRO arm provides 1-7/8" clearance to accommodate the use of a surface overhead stop/holder.

Parallel

Top Jamb

### Unitrol® Arm
Can be used for either parallel arm or top jamb applications. *Unitrol* arms combine the features of a double lever arm overhead door stop/holder with the backcheck feature of the door closer to reduce door stopping shock loads to a minimum. The *Unitrol* uses a compression spring buffer at the soffit plate/arm shoe that will absorb 30 lbf. of force, 5° prior to the door's dead stop. Coupled with the door closer's backcheck feature, this arm provides the most controlled stop available with a surface door closer. For parallel arm applications there are three different length arm assemblies. Each length is designed for a specific range of door widths, to provide precise door control. This further lessens the dead stop impact on the door's hinges/pivots.


Copyright © 2002-2016 Yale Security Inc., an ASSA ABLOY Group company. All rights reserved.
Reproduction in whole or in part without the express written permission of Yale Security Inc. is prohibited.

## APPLICATIONS

**HW-016**
Revision Date:

Pull Side

Low Profile Pull Side

Push Side

Low Profile Push Side

**Slide Track**
Whether pull- or push-side mounted, slide track provides the designer with the smoothest lines available in a surface- mounted door closer. The single lever arm allows components to be located in a stack configuration to minimize projection and eliminate obtrusive arm angles. The arm geometry reduces door closer power efficiency by approximately 25% from that of a regular arm.

**Standard unit:**
- Adjustable85°- 110° (hold open and non-hold open). Track is supplied with a spring buffered stop. An auxiliary stop, by others, is recommended.
- Specify if hold open unit is required.
- 180° swing (non-hold open, pull side only) is also available. This track assembly requires that a door stop, by others, be supplied to stop the door.

Regular Arm

Parallel Arm

**Regular Arm:** Allows closer to be installed where there is as little as 1" (25mm) of frame face or ceiling clearance.

**Parallel Arm:** Allows closer to be installed 1/2" (13mm) higher up on door than standard parallel arm application.

**Low Profile Arm**
Supplied with 8381/8581 series door closers for non-hold open installations only. Low profile arms have a reduced height elbow joint and a straight main arm. This enables the door closer to be installed in less vertical space.

**Note:** Low profile arm door closers are not supplied with Tri-Style® packaging.


Copyright © 2002-2016 Yale Security Inc., an ASSA ABLOY Group company. All rights reserved.
Reproduction in whole or in part without the express written permission of Yale Security Inc. is prohibited.

REGULAR ARM

**HW-016**
Revision Date:

## Closer Mounting Plates
## Slim Line Installations

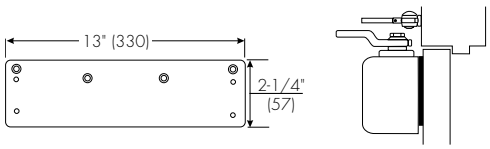


**Narrow Top Rail - #8146 Drop Plate:** For use where the narrow top rail of the door prevents the closer from being mounted directly on to the door surface. This drop plate must be used for any Series 8000 closer mounted on a top rail between 1-9/16" and 2-7/16" (40 and 62mm) in height, or any Series 8080 closer mounted on a top rail between 1-7/16" and 2-5/16" (36 and 59mm) in height.

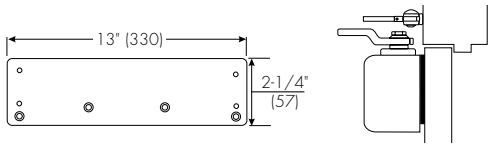


**Concealed Door Holder - #8146 Drop Plate:** For use where a concealed door holder prevents normal mounting of the closer to the door. This is the same plate used for narrow rail mounting, but is inverted for this application to permit the mounting screws to clear the bottom of the door-holder preparation in the top rail of the door. This places the centerline of the plate's upper mounting screws at 2-3/16" (56mm) from the top of the door.

## Full Cover Installations

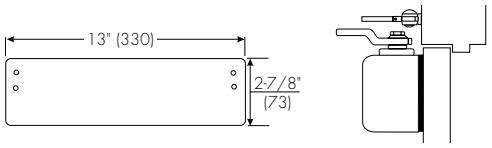


**Exposed Back - #8445 Molded Full Cover Decorative Back Plate:** For use on doors with glass lights where a closer with a molded full cover is installed and the closer back is exposed. This plate covers the back of the installation to give a pleasing appearance from the reverse side.

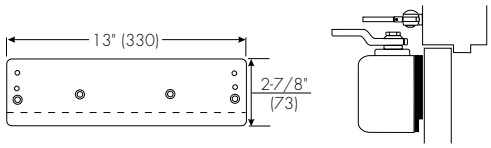


**Exposed Back/Narrow Top Rail - Exposed Back Concealed Door Holder - #8446 Molded Full Cover Drop Plate Kit:** For use with molded full cover installation when an 8146 Plate is needed as a drop plate on a narrow top rail, or as a clearance plate for a concealed door holder, and the closer back is exposed. Kit contains an 8146 Drop Plate and an 8445 Decorative Plate.

## Metal Cover Installations

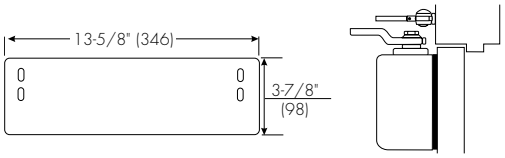


**Exposed Back - #8545 Metal Cover Decorative Back Plate:** For use on doors with glass lights where a closer with a metal full cover is installed and the closer back is exposed. This plate covers the back of the installation to give a pleasing appearance from the reverse side.

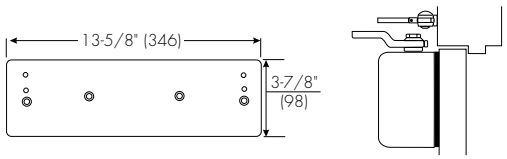


**Concealed Door Holder - #8546 Metal Cover Drop Plate:** For use where a concealed door holder prevents the normal mounting of the closer to the door. This plate permits the mounting screws to clear the bottom of the door-holder preparation in the top rail of the door. This places the centerline of the plate's upper mounting screws at 2-3/16" (56mm) from the top of the door.

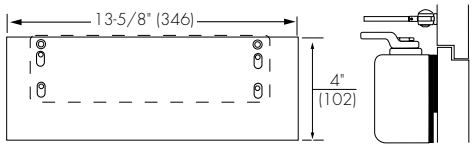


**Exposed Back/Narrow Top Rail - #8549 Metal Cover Drop Plate Kit:** For use with metal full cover installations, when an 8146 Plate is needed as a drop plate on a narrow top rail and the closer back is exposed. Kit contains an 8146 Drop Plate and an 8545 Decorative Plate.



Copyright © 2002-2016 Yale Security Inc., an ASSA ABLOY Group company. All rights reserved.
Reproduction in whole or in part without the express written permission of Yale Security Inc. is prohibited.

## Closer Mounting Plates
## Architectural Plastic or Metal Cover Installations

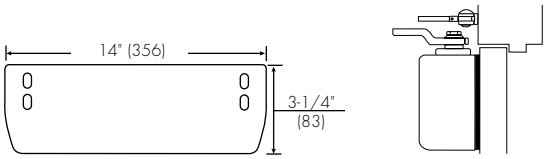


**Exposed Back - #8545A Architectural Plastic or Architectural Metal Cover Decorative Back Plate:** For use on doors with glass lights where a closer with an architectural plastic or metal cover is installed and the closer back is exposed. This plate covers the back of the installation to give a pleasing appearance from the reverse side.

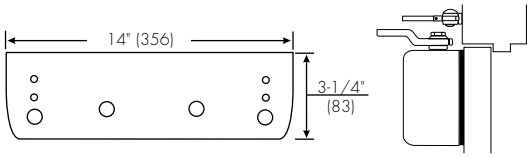


**Concealed Door Holder - #8546A Architectural Plastic or Architectural Metal Cover Drop Plate:** For use where a concealed door holder prevents the normal mounting of the closer to the door. This plate permits the mounting screws to clear the bottom of door-holder preparation in the top rail of the door. This places the centerline of the plate's upper mounting screws at 2-3/16" (56mm) from the top of the door.

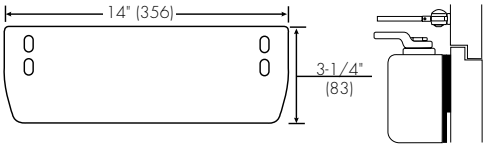


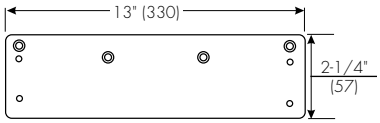


**Exposed Back/Narrow Top Rail - #8549A Architectural Plastic or Architectural Metal Cover Drop Plate Kit:** For use with architectural plastic or metal cover installations when an 8146 plate is needed as a drop plate on a narrow top rail and the closer back is exposed. Kit contains an 8146 Drop Plate and an 8545A Decorative Plate.


Copyright © 2002-2016 Yale Security Inc., an ASSA ABLOY Group company. All rights reserved.
Reproduction in whole or in part without the express written permission of Yale Security Inc. is prohibited.

## REGULAR ARM

**HW-016**
Revision Date:

### Brackets for Non-Hold Open Arms

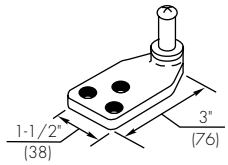


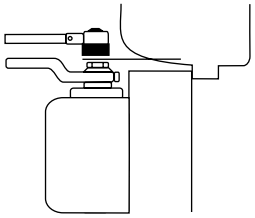

**Molded/Bull Nose Trim - #2403B Bracket:** For use where the door frame has molded or bull nose trim which will not accept a standard non-hold open shoe. The bracket is mortised into the frame rabbet, and projects beyond the face of the frame. It will accommodate a frame rabbet up to 2" (51mm) deep.

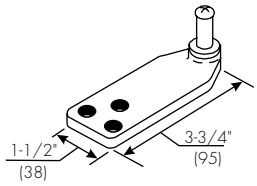


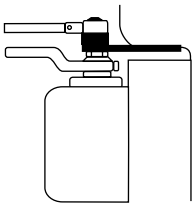

**Molded / Bull Nose Trim - #2403-3/4 Bracket:** This bracket is similar to, but longer than, the 2403B bracket. It is designed to accommodate frame rabbets from 2" to 2-7/8" (51 to 73mm) deep.

### Brackets for Hold Open Arms

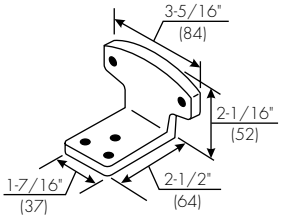


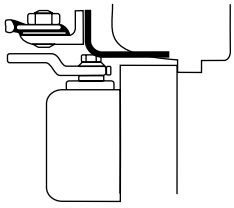

**Molded / Bull Nose Trim - #80 Bracket:** For use where the door frame has molded or bull nose trim which will not accept a standard hold open shoe. It is mortised into the frame rabbet, and projects beyond the face of the frame. It will accommodate a rabbet up to 2" (51mm) deep. This bracket is used in combination with the standard hold-open mounting shoe.

## TOP JAMB ARM

### Closer Mounting Plates
### Slim Line Installations

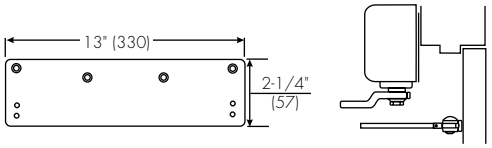


**Low Ceiling Clearance - #8146 Drop Plate:** For use where low ceiling clearance prevents normal top jamb mounting. This plate is used when clearance is from 1-7/8" to 2-7/8" (48 to 73mm). Where ceiling clearance is less than 1-7/8" (48mm) see #8148 Drop Plate on page 30.

**Overhead Door Holder - #8146 Drop Plate:** For use where a surface or concealed overhead door holder prevents normal top jamb mounting. This plate drops the closer and allows arm mounting screws to clear the bottom of the door holder. This places the centerline of the arm mounting screws at 2-7/8" (73mm) from the top of the door.


Copyright © 2002-2016 Yale Security Inc., an ASSA ABLOY Group company. All rights reserved.
Reproduction in whole or in part without the express written permission of Yale Security Inc. is prohibited.

## Closer Mounting Plates
## Slim Line Installations

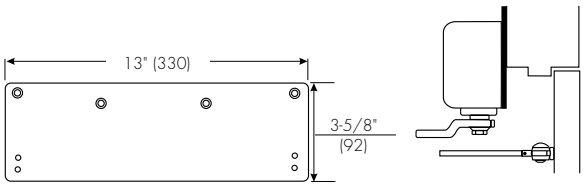


**Low Ceiling Clearance - #8148 Drop Plate:** For use where the ceiling clearance is between 1-1/2" and 1-3/4" (38 and 44mm).

## Metal Cover Installations

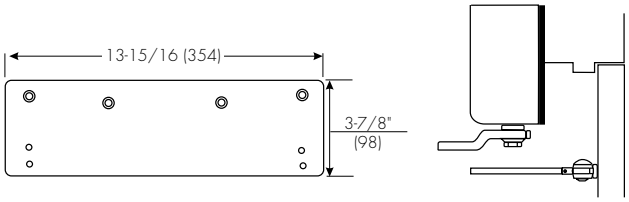


**Low Ceiling Clearance - Overhead Door Holder - #8547 Metal Full Cover Drop Plate:** For use where a low ceiling clearance prevents normal top jamb mounting. This plate is used when the clearance is between 1-5/8" and 3-7/8" (41 and 98mm). Or for use where a surface or concealed overhead door holder prevents normal top jamb mounting of a closer with a metal full cover. This plate drops the closer and allows arm mounting screws to clear the bottom of the door holder. This places the centerline of the arm mounting screws at 3-7/8" (98mm) from the top of the door.

## Architectural Plastic or Metal Cover Installations

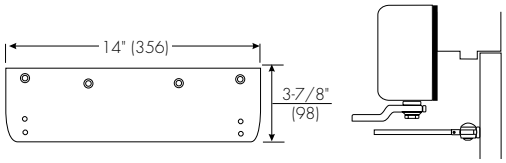


**Low Ceiling Clearance - Overhead Door Holder - #8547A Architectural Plastic or Architectural Metal Cover Drop Plate:** For use where low ceiling clearance prevents normal top jamb mounting. This plate is used when the clearance is between 1-5/8" and 3-7/8" (41 and 98mm). Also for use where a surface or concealed overhead door holder prevents normal top jamb mounting of a closer with an architectural plastic or metal full cover. This plate drops the closer and allows arm mounting screws to clear the bottom of the door holder. This places the centerline of the arm mounting screws at 3-7/8" (98mm) from the top of the door.


Copyright © 2002-2016 Yale Security Inc., an ASSA ABLOY Group company. All rights reserved.
Reproduction in whole or in part without the express written permission of Yale Security Inc. is prohibited.

## Closer Mounting Plates
## Slim Line Installations

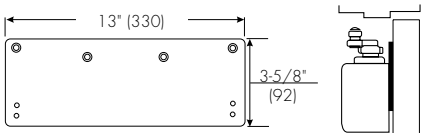


**Narrow Top Rail - #8148 Drop Plate:** For use where a narrow top rail prevents the closer from being mounted directly to the door surface. This drop plate can be used to mount a closer on a top rail as narrow as 2-7/8" (73mm) in height.

## Full Cover Installations

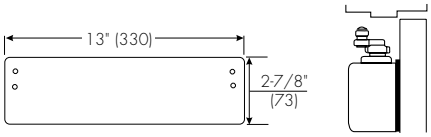


**Exposed Back - #8445 Molded Full Cover Decorative Back Plate:** For use on doors with glass lights where a closer with molded full cover is installed and the closer back is exposed. This plate covers the back of the installation to give a pleasing appearance from the reverse side.

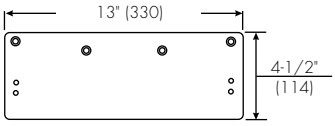


**Exposed Back/Narrow Top Rail - #8158 Molded Full Cover Drop Plate:** For use on doors with glass lights where a closer with molded full cover is installed and the back of the closer is exposed. This covers the back of the installation and gives a pleasing appearance from the reverse side.

## Metal Cover Installations

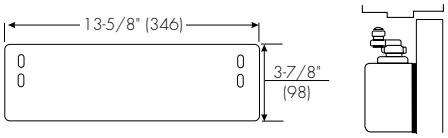


**Exposed Back - #8545 Metal Full Cover Decorative Back Plate:** For use on doors with glass lights where a closer with full metal cover is installed and the back of the closer is exposed. This plate covers the back of the installation and gives a pleasing appearance from the reverse side.

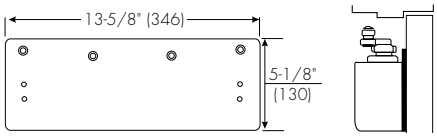


**Exposed Back/Narrow Top Rail - #8548 Metal Full Cover Drop Plate:** For use on doors with glass lights where a closer with metal full cover is installed on a narrow top rail, and the back of the cover is exposed. This drop plate can be used to mount a closer on a top rail as narrow as 2-7/8" (73mm) in height. This plate covers the back of the installation and gives a pleasing appearance from the reverse side.

## Architectural Plastic or Metal Cover Installations

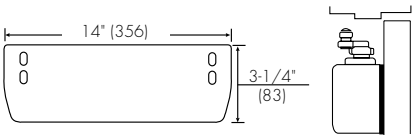


**Exposed Back - #8545A Architectural Plastic or Architectural Metal Cover Decorative Back Plate:** For use on doors with glass lights where a closer with an architectural plastic or metal cover is installed and the closer back is exposed. This plate covers the back of the installation to give a pleasing appearance from the reverse side.

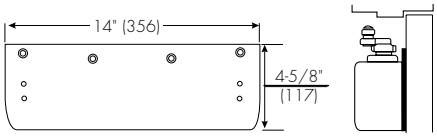


**Exposed Back/Narrow Top Rail - #8548A Architectural Plastic or Architectural Metal Cover Drop Plate:** For use on doors with glass lights where a closer with an architectural plastic or metal cover is installed on a narrow top rail, and the back of the cover is exposed. This drop plate can be used to mount a closer on a top rail as narrow as 2-7/8" (73mm) in height. This plate covers the back of the installation to give a pleasing appearance from the reverse side.



Copyright © 2002-2016 Yale Security Inc., an ASSA ABLOY Group company. All rights reserved.
Reproduction in whole or in part without the express written permission of Yale Security Inc. is prohibited.

## Brackets for Non-Hold Open Arms

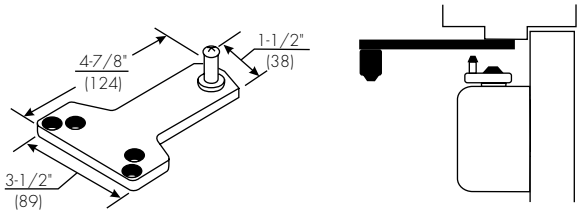


**Standard Installation - #1618A Soffit Plate:** This soffit plate is supplied standard with parallel arm closers. It can be mounted where the frame soffit is as narrow as 1" (25 mm).

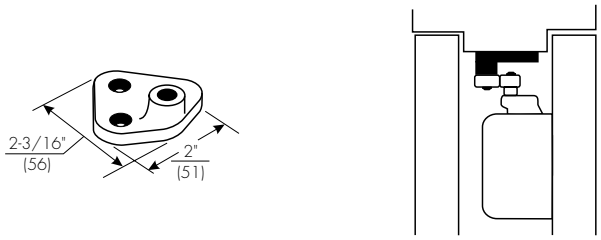


**Mounting between Doors - #2018 Soffit Bracket:** For use where insufficient space between companion doors does not permit use of other soffit plates. This bracket permits mounting of the closer between doors with as little as 3" (76mm) of header space. Permits closer arm to clear up to 5/8" (16mm) high stop.

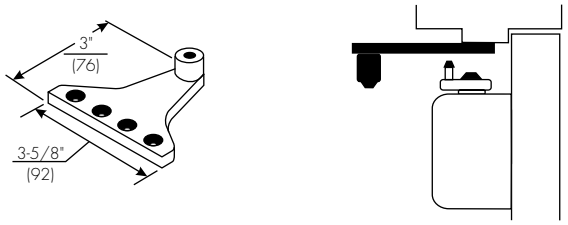


**Narrow Frame/Removable Stop - #2018B Soffit Plate:** For use where a narrow frame or frame with removable stop does not permit use of the standard soffit plate. This soffit plate may be mounted on the frame soffit or the frame rabbet where the stop does not exceed 5/8" (16mm) in height. All of the screw holes are in a straight line, requiring as little as 1-1/4" (32mm) of frame reveal to mount bracket and maintain good closer arm geometry. Where the frame soffit is as wide as 2" (51mm), this soffit plate may be used to clear weather-stripping that is up to 1-3/8" (35mm) wide and 5/8" (16mm) in height.

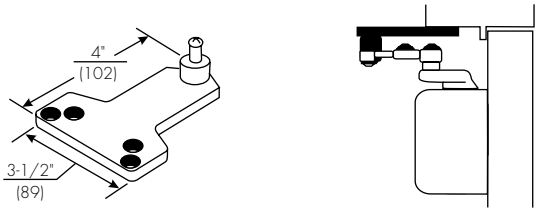


**Blade/Applied Stop - #2018D Soffit Plate:** For use where a blade or applied stop does not permit installation of the standard soffit plate. Mounts to either the frame soffit or rabbet. Since this soffit plate projects 7/8" (22mm) less than a standard soffit plate, it requires a minimum frame reveal of 1-1/2" (38mm). Permits closer to clear up to a 5/8" (16mm) stop.

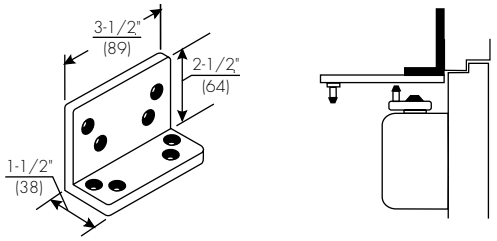


**Flush Transom - #2022 Angle Bracket:** For use where rabbeted or flush transom conditions prevent installation of a soffit plate. Used in combination with the 1618 soffit plate, or may be used in combination with the 2018S soffit plate when it is necessary for the closer arm to clear a separate overhead door holder.

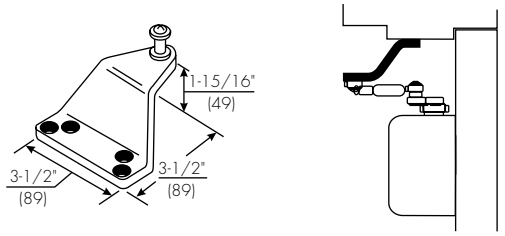


**Extra-Clearance - #2018S Offset Soffit Plate:** For use where the need for additional clearance prevents use of the standard soffit plate. This plate mounts to the frame soffit to provide up to 2" (51mm) of clearance when a separate overhead door holder is used. Standard mounting requires a 2-5/8" (67mm) wide frame soffit. It may also be used where unusually high frame stops or weather-stripping prevent the use of other soffit plates.


Copyright © 2002-2016 Yale Security Inc., an ASSA ABLOY Group company. All rights reserved.
Reproduction in whole or in part without the express written permission of Yale Security Inc. is prohibited.

## Brackets for Non-Hold Open & Hold Open Arms

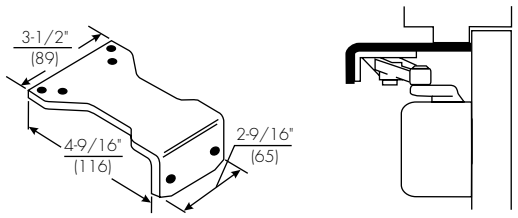


**Parallel Hold-Open - #1628H Adapter Plate:** Supplied standard with all parallel arm hold open closers. It can also be used to convert regular arm or top jamb hold open arms to parallel arm installation. It can be mounted where the frame soffit is as narrow as 1" (25mm).

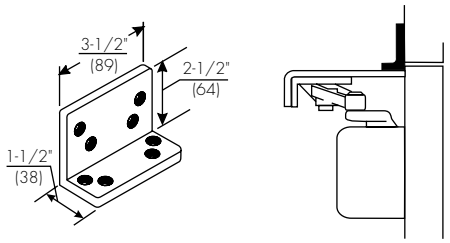


**Flush Transom - #2022 Angle Bracket:** For use where rabbeted or flush transom conditions prevent installation of a soffit plate. Used in combination with the 1628H adapter plate, this bracket fastens to the overhead transom to provide a mounting surface for the soffit plate assembly.

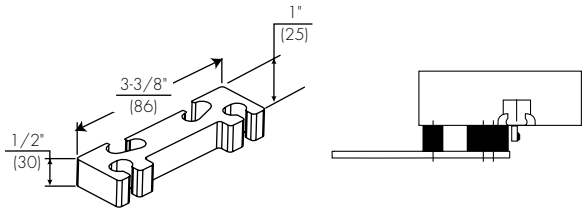


**Clearance/Support Blade Stop - #6891 Spacer Block:** For use where the door frame has a blade stop and the soffit plate must be mounted on the frame rabbet. This accessory is used in combination with the standard spacer block to provide clearance of the blade stop. Also used with non-hold open arms.


Copyright © 2002-2016 Yale Security Inc., an ASSA ABLOY Group company. All rights reserved.
Reproduction in whole or in part without the express written permission of Yale Security Inc. is prohibited.

## Closer Mounting Plates
## Slim Line Installations

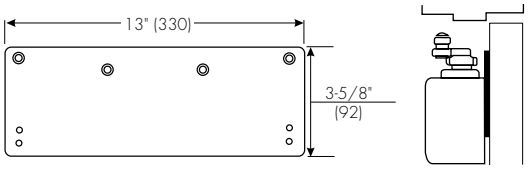


**Narrow Top Rail - #8148 Drop Plate:** For use where a narrow top rail prevents the closer from being mounted directly to the door surface. This drop plate can be used to mount a closer on a top rail as narrow as 2-9/16" (65mm) in height.

## Full Cover Installations

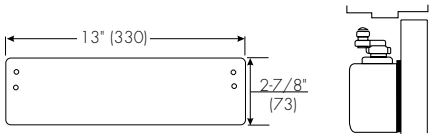


**Exposed Back - #8445 Molded Full Cover Decorative Back Plate:** For use on doors with glass lights where a closer with molded full cover is installed and the closer back is exposed. This plate covers the back of the installation to give a pleasing appearance from the reverse side.

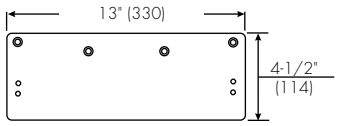


**Exposed Back/Narrow Top Rail - #8158 Molded Full Cover Drop Plate:** For use on doors with glass lights where a closer with molded full cover is installed and the back of the closer is exposed. This covers the back of the installation and gives a pleasing appearance from the reverse side.

## Metal Cover Installations

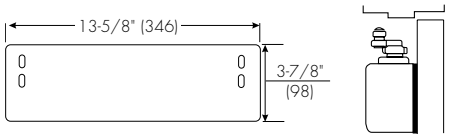


**Exposed Back - #8545 Metal Full Cover Decorative Back Plate:** For use on doors with glass lights where a closer with full metal cover is installed and the back of the closer is exposed. This plate covers the back of the installation and gives a pleasing appearance from the reverse side.

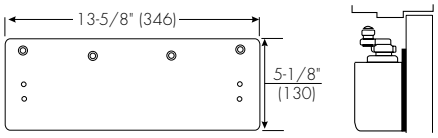


**Exposed Back/Narrow Top Rail - #8548 Metal Full Cover Drop Plate:** For use on doors with glass lights where a closer with metal full cover is installed on a narrow top rail, and the back of the cover is exposed. This drop plate can be used to mount a closer on a top rail as narrow as 2-9/16" (65mm) in height. This plate covers the back of the installation and gives a pleasing appearance from the reverse side.

## Architectural Plastic or Metal Cover Installations

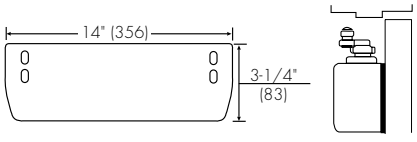


**Exposed Back - #8545A Architectural Plastic or Architectural Metal Cover Decorative Back Plate:** For use on doors with glass lights where a closer with an architectural plastic or metal cover is installed and the closer back is exposed. This plate covers the back of the installation to give a pleasing appearance from the reverse side.

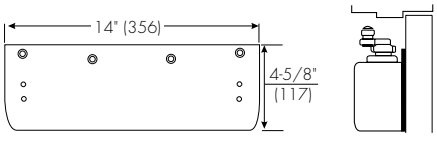


**Exposed Back/Narrow Top Rail - #8548A Architectural Plastic or Architectural Plastic or Architectural Metal Cover Drop Plate:** For use on doors with glass lights where a closer with an architectural plastic or metal cover is installed on a narrow top rail, and the back of the cover is exposed. This drop plate can be used to mount a closer on a top rail as narrow as 2-9/16" (65mm) in height. This plate covers the back of the installation to give a pleasing appearance from the reverse side.


Copyright © 2002-2016 Yale Security Inc., an ASSA ABLOY Group company. All rights reserved.
Reproduction in whole or in part without the express written permission of Yale Security Inc. is prohibited.

## Brackets for Non-Hold Open Arms & Hold Open Arms

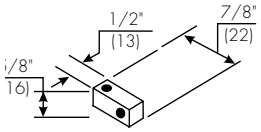


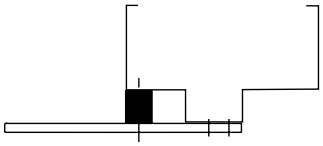

**Standard - #2019S Spacer Block:** For use where a narrow frame soffit does not provide adequate support for the soffit plate. Supplied as standard with all parallel rigid arm closers.

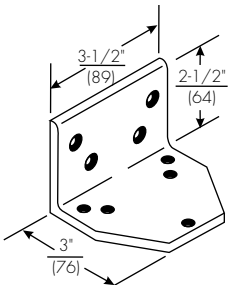


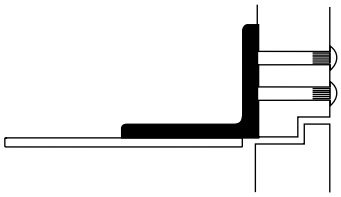

**Flush Rabbeted Transom - #2019L Angle Bracket:** For use where flush transom conditions prevent mounting of the standard soffit plate. This bracket is used in combination with the standard soffit plate.

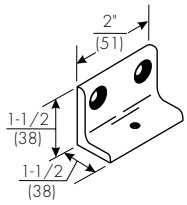


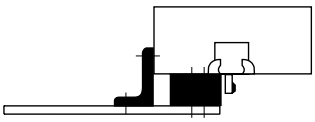

**Narrow Frame - #6890 Support Bracket:** For use where the frame is narrow and the soffit plate cannot be mounted directly to the frame soffit or rabbet. Used in combination with the #6891 Spacer Block on blade stop frames to provide extra support and needed clearance of the blade stop. Used on frames where the frame stop does not exceed 5/8" (16mm) in height.

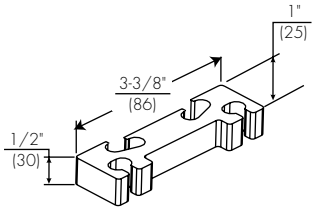


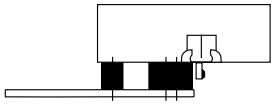

**Clearance/Support Blade Stop - #6891 Spacer Block:** For use where the door frame has a blade stop and the soffit plate must be mounted on the frame rabbet. This accessory is used in combination with the standard spacer block to provide clearance of the blade stop.



Copyright © 2002-2016 Yale Security Inc., an ASSA ABLOY Group company. All rights reserved.
Reproduction in whole or in part without the express written permission of Yale Security Inc. is prohibited.

## Closer Mounting Plates
### Parallel Arm

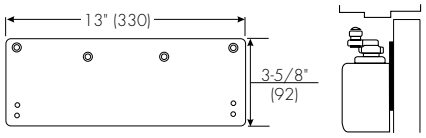


**Narrow Top Rail - #8148 Drop Plate:** For use where a narrow top rail prevents the closer from being mounted directly to the door surface. This drop plate can be used to mount a closer on a top rail as narrow as 2-7/16" (62mm) in height.

## Full Cover Installations

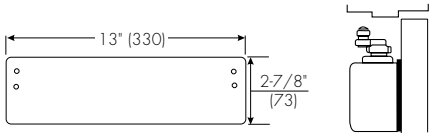


**Exposed Back - #8445 Molded Full Cover Decorative Back Plate:** For use on doors with glass lights where a closer with molded full cover is installed and the closer back is exposed. This plate covers the back of the installation to give a pleasing appearance from the reverse side.

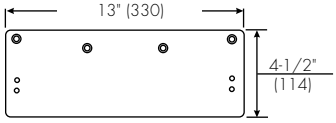


**Exposed Back/Narrow Top Rail - #8158 Molded Full Cover Drop Plate:** For use on doors with glass lights where a closer with molded full cover is installed and the back of the closer is exposed. This covers the back of the installation and gives a pleasing appearance from the reverse side.

## Metal Cover Installations

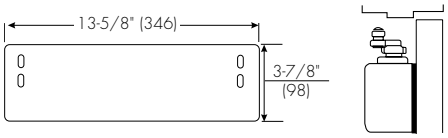


**Exposed Back - #8545 Metal Full Cover Decorative Back Plate:** For use on doors with glass lights where a closer with full metal cover is installed and the back of the closer is exposed. This plate covers the back of the installation and gives a pleasing appearance from the reverse side.

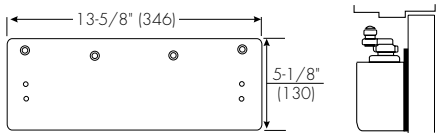


**Exposed Back/Narrow Top Rail - #8548 Metal Full Cover Drop Plate:** For use on doors with glass lights where a closer with metal full cover is installed on a narrow top rail, and the back of the cover is exposed. This drop plate can be used to mount a closer on a top rail as narrow as 2-9/16" (65mm) in height. This plate covers the back of the installation and gives a pleasing appearance from the reverse side.

## Architectural Plastic or Metal Cover Installations

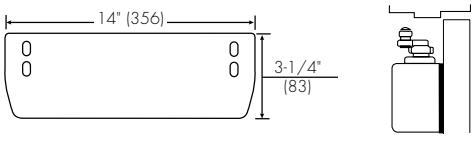


**Exposed Back - #8545A Architectural Plastic or Architectural Metal Cover Decorative Back Plate:** For use on doors with glass lights where a closer with an architectural plastic or metal cover is installed and the closer back is exposed. This plate covers the back of the installation to give a pleasing appearance from the reverse side.

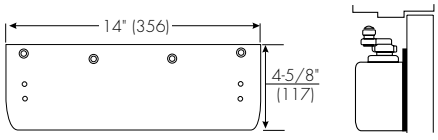


**Exposed Back/Narrow Top Rail - #8548A Architectural Plastic or Architectural Plastic or Architectural Metal Cover Drop Plate:** For use on doors with glass lights where a closer with an architectural plastic or metal cover is installed on a narrow top rail, and the back of the cover is exposed. This drop plate can be used to mount a closer on a top rail as narrow as 2-7/16" (62mm) in height. This plate covers the back of the installation to give a pleasing appearance from the reverse side.


Copyright © 2002-2016 Yale Security Inc., an ASSA ABLOY Group company. All rights reserved.
Reproduction in whole or in part without the express written permission of Yale Security Inc. is prohibited.

## Closer Mounting Plate

### Soffit Plate Reinforcing Brackets (for Parallel Arm)

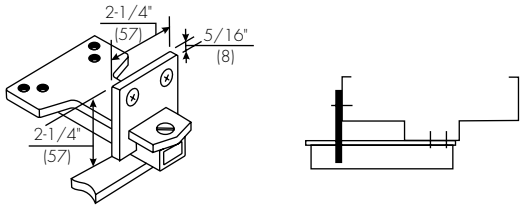


**Additional Support - #6190 Reinforcing Bracket:** Standard for use with all parallel arm *Unitrol* door controls. Provides additional support to the soffit plate on installations with door frame reveals from 1-7/8" to 4-5/8" (48 to 117mm).

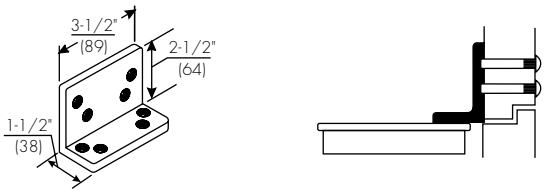


**Flush Rabbeted Transom - #2022 Angle Bracket:** Optional for use with all parallel arm *Unitrol* door controls. For use where rabbeted or flush transom conditions prevent installation of the soffit plate assembly. This bracket fastens to the overhead transom to provide a mounting surface for the soffit plate assembly.

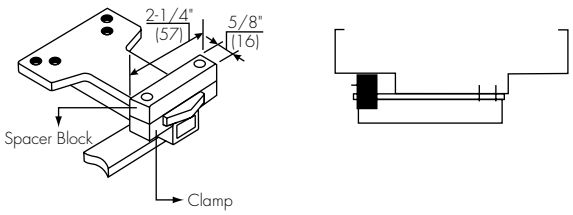


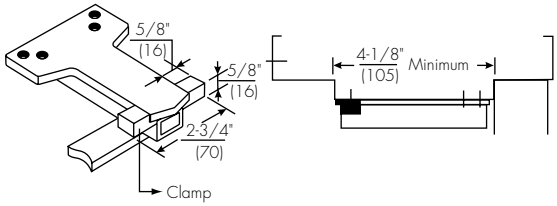


**Wide Frame - #6191 Reinforcing Kit:** Optional for use with all parallel arm *Unitrol* door controls. Used to support the soffit plate on installations with wide frames. Clamps may be used with or without the spacer block, depending on frame conditions.



Copyright © 2002-2016 Yale Security Inc., an ASSA ABLOY Group company. All rights reserved.
Reproduction in whole or in part without the express written permission of Yale Security Inc. is prohibited.

## Closer Mounting Plates
## Top Jamb

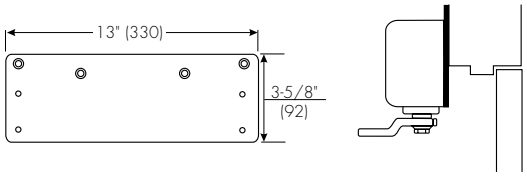


**Narrow Top Rail - #8148 Drop Plate:** For use where a narrow top rail prevents the closer from being mounted directly to the door surface. This drop plate can be used to mount a closer on a top rail as narrow as 2-7/16" (62mm) in height.

## Full Cover Installations

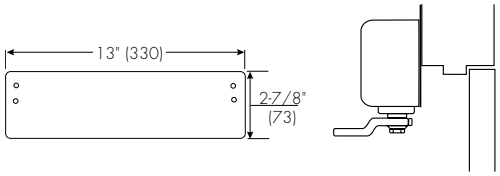


**Exposed Back - #8445 Molded Full Cover Decorative Back Plate:** For use on doors with glass lights where a closer with molded full cover is installed and the closer back is exposed. This plate covers the back of the installation to give a pleasing appearance from the reverse side.

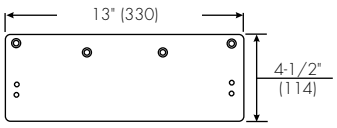


**Exposed Back/Narrow Top Rail - #8158 Molded Full Cover Drop Plate:** For use on doors with glass lights where a closer with molded full cover is installed and the back of the closer is exposed. This covers the back of the installation and gives a pleasing appearance from the reverse side.

## Metal Cover Installations

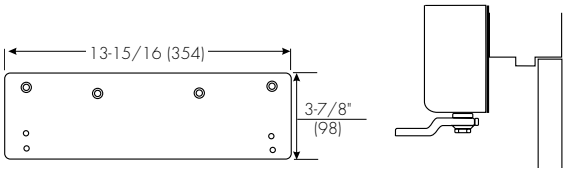


**Low Ceiling Clearance - Overhead Door Holder - #8547 Metal Full Cover Drop Plate:** For use where a low ceiling clearance prevents normal top jamb mounting. This plate is used when the clearance is between 1-5/8" and 3-3/4" (41 and 95mm). Or for use where a surface or concealed overhead door holder prevents normal top jamb mounting of a closer with a metal full cover. This plate drops the closer and allows arm mounting screws to clear the bottom of the door holder. This places the centerline of the arm mounting screws at 3-7/8" (98mm) from the top of the door.

## Architectural Plastic or Metal Cover Installations

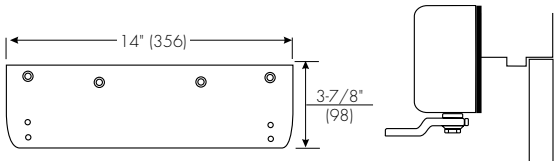


**Low Ceiling Clearance - Overhead Door Holder - #8547A Architectural Plastic or Architectural Metal Cover Drop Plate:** For use where low ceiling clearance prevents normal top jamb mounting. This plate is used when the clearance is between 1-5/8" and 3-3/4" (41 and 95mm). Or for use where a surface or concealed overhead door holder prevents normal top jamb mounting of a closer with an architectural plastic or metal full cover. This plate drops the closer and allows arm mounting screws to clear the bottom of the door holder. This places the centerline of the arm mounting screws at 3-7/8" (98mm) from the top of the door.


Copyright © 2002-2016 Yale Security Inc., an ASSA ABLOY Group company. All rights reserved.
Reproduction in whole or in part without the express written permission of Yale Security Inc. is prohibited.

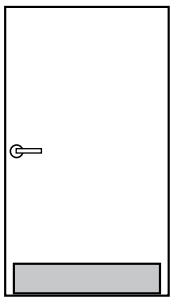

Mop Plate
Up to 6" h x 48" w

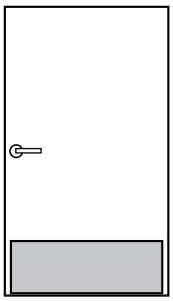

Kick Plate
6" to 12" h x 48" w

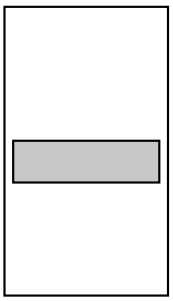

Stretcher Plate
6" to 12" h and up to 48" w

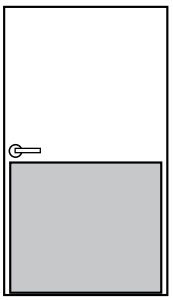

Armor Plate
Up to 48" h x 48" w and available in most finishes

Width of Plates:
Push Side: 2" less than door width. Pull Side: 1 1/2" less than door width.
NFPA 80 STANDARDS — 2-4.5 Protection Plates: Factory-installed protection plates shall be installed in accordance with the listing of the door. Field-installed protection plates shall be labeled and installed in accordance with their listing.
Exception: Labeling is not required where the top of the protection plate is not more than 16" (406 mm) above the bottom of the door.

OPTIONAL
**Self-Drilling TEK Screws**
Cuts door plate installation time in half.

## Metal Door Plate – Economy Duty No. K1038

**Material:** .038" aluminum, stainless steel

**Finishes:** Brass look aluminum (BRS LK), US32D, and US3**LIFETIME**

**Fastener:** #6 x 5/8" OH SMS

**Ordering:** Specify height x width x finish code. Add any options

**Weight:** 8" x 34" = 3.2 lbs

**Options:**
- SA – self-adhesive mounting
- TORX – security Torx screws
- TEK – self-drilling screws
- Cutouts for locks, louvers, or windows (see worksheets on pages C14-C15 for details on how to order)

## Metal Door Plate – Standard Duty No. K1050, K1050F

**Material:** .050" aluminum, brass, bronze, stainless steel

**Finishes:** Available in standard architectural finishes, US32D**MS**, US32D**316**, and US32**316** (see page 9)

**Fastener:** #6 x 5/8" OH SMS

**Ordering:** Specify height x width x finish code. Add any options

**Weight:** 8" x 34" = 4.0 lbs

**ANSI:** J101 - metal armor plate, J102 - metal kick plate, J103 - metal stretcher & mop plate

**Options:**
- SA – self-adhesive mounting
- TEK – self-drilling screws
- Beveled 3 or 4 edges, specify B3E or B4E
- Cutouts for locks, louvers, or windows (see worksheets on pages C14-C15 for details on how to order)
- Heavy bevel available, specify HVBEV
- Screw mounting (K1050F) and UL listed for use on 90-minute label wood doors and 3-hour label metal doors
- CSK – countersunk holes
- TORX – security Torx screws

Copyright © 2012-2015, Rockwood Manufacturing Company, an ASSA ABLOY Group company. All rights reserved
Reproduction in whole or in part without the express written permission of Rockwood Manufacturing Company is prohibited.

# securex®

## operation

Electric locks provide the ability to electrically lock or unlock the outside trim from a remote location. Fail Safe locks are commonly used in stair towers to release upon fire alarm activation. Fail Secure locks are used on perimeter doors or security doors to allow ingress using access control technologies (proximity cards, keypads, etc.)

## features

- Free Wheeling lever mechanism.
- Self-contained, continuous-duty integral solenoid (allows installation in standard cylindrical prep).
- Available Fail Safe or Fail Secure.
- Available in 12 or 24 volts DC.
- External rectifier available upon request for AC operation.
- Mechanical cylinder override.
- All 5400LN cylinder options.
- Certified ANSI/BHMA Grade 1.
- UL listed.
- 2-year limited warranty.

## REX

Request to Exit - Operating inside lever handle triggers REX switch which can be used to shunt an alarm, monitor egress or release a magnetic lock, etc.

## electrical specifications

- Continuous duty solenoid
  150 mA @ 24VDC
  300 mA @ 12VDC
- REX (SPDT) Contact Rating:
  3A @ 125 VAC
  2A @ 24 VDC

## electrolynx®

Yale® electrified 5400LN locks are equipped with *ElectroLynx* connectors. As a standard feature, these connectors link power from the incoming source to electrified locking products, including hinges, locks, exit devices, magnetic holders and strikes.

**Note: Electrified door hardware with *ElectroLynx* connectors requires a compatible number of lead wires attached to the door hinge.**

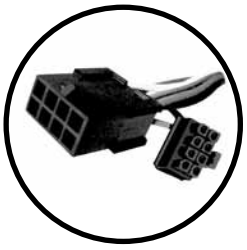

## functions

| Outside Inside | Function | Function Description |
|---|---|---|
| 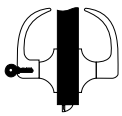 | 5490LN | **Fail Safe**<br>• Power on locks outside lever.<br>• Inside lever always active.<br>• Latchbolt retracted by key when locked electrically.<br>• Free Wheeling lever when locked electrically. |
| 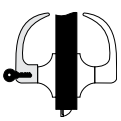 | 5491LN | **Fail Secure**<br>• Power on unlocks outside lever.<br>• Inside lever always active.<br>• Latchbolt retracted by key when power is off.<br>• Free Wheeling lever when power is off (locked). |

| Outside Inside | Function | Function Description |
|---|---|---|
| 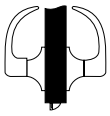 | 5480LN | **Fail Safe**<br>• Power on locks outside lever.<br>• Inside lever always active.<br>• Latchbolt retracted either side except when outside lever is locked electrically.<br>• Free Wheeling lever when locked electrically. |
| 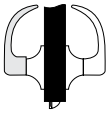 | 5481LN | **Fail Secure**<br>• Power on unlocks outside lever.<br>• Inside lever always active.<br>• Latchbolt retracted either side when power is off.<br>• Free Wheeling lever when power is off (locked). |

# securex® accessories

## BPS power supplies by securitron®

**Operation**

Power supplies are designed to provide reliable filtered and regulated power for long life to a variety of electrified hardware components.

**Product Features**

- Individual output circuit breakers
- Regulated and filtered fuse protected outputs
- LEDs monitor zone status (voltage or no voltage)
- Slide switches connect or disconnect load from power (Not available on 1 Amp supplies)
- Internal Back-Up battery charging circuit
- Rugged steel enclosure
- Fire alarm interface

**Listings**

- UL CLASS 2

**Applications (use with):**

- Fail Safe cylindrical locks
- Fail Secure cylindrical locks

**Ordering**

Ex: BPS-24-4, BPS-12-3

| Model | Input | Output | Application |
|---|---|---|---|
| BPS-24-1 | 120 VAC | 1 Amp @ 24 VDC | 2-5400LN |
| BPS-24-2 | 120 VAC | 2 Amp @ 24 VDC | 5-5400LN |
| BPS-24-4 | 120 VAC | 4 Amp @ 24 VDC | 11-5400LN |
| BPS-12-1 | 120 VAC | 1 Amp @ 12 VDC | 1-5400LN |
| BPS-12-3 | 120 VAC | 3 Amp @ 12 VDC | 3-5400LN |

**Consult factory for additional power supply applications.**

**Yale recommends McKinney®, Pemko and Securitron® for power transfer devices and other electronic accessories.**

## Securitron PowerJump™ ICPT

The Securitron PowerJump ICPT Inductive Coupling Power Transfer delivers power contactlessly and invisibly between the frame and door to power electrified hardware on the door. The PowerJump can be installed at the latch side or hinge side of the door and transfers up to 6 watts of power without pins or wires across the door gap, eliminating points of vulnerability and wear … and no need to core drill the door. The PowerJump is field selectable for 12VDC or 24VDC systems and is ideal for fail secure applications. The unit can hold electrified latches open in continuous duty or can momentarily energize the lockset for latch retraction.

Additional information regarding this product can be found at www.securitron.com.

# cylinders

## cylinder options

The following selection guide indicates the correct cylinder for each locking segment.

| | Lockset Series: 5400LN | Types of Cylinder Mechanisms | | | | | | | |
|---|---|---|---|---|---|---|---|---|---|
| | | Conventional | | Protected Keyway | | Security | | High Security | |
| Cylinder Types | **Fixed Core** | **6-pin** | **7-pin** | **6-pin** | **7-pin** | **6-pin** | **7-pin** | **6-pin** | **7-pin** |
| | Key-In-Lever | 1802 | 1802A | K402 | K402 | 5802 | 5802A | N/A | N/A |
| | **Interchangeable Core** | | | | | | | | |
| | LFIC | 1210 | 1220 | K800 | K800 | 5210 | 5220 | N/A | N/A |
| | SFIC | N/A | N/A | K600 | K600 | N/A | N/A | N/A | N/A |

Refer to Yale® KeyMark® and/or Cylinders and Keys Catalog sections for all details and how to order examples.

**1802**

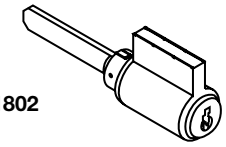

**1210**

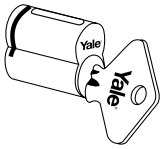


## Yale® KeyMark®

For those applications requiring protected key control, Yale® KeyMark® cylinders guard against unauthorized key duplication. The *Yale KeyMark* Security Leg® keyway feature increases resistance against picking and impressioning and can easily retrofit into existing systems. For further details and availability, refer to the separate *Yale KeyMark* catalog.

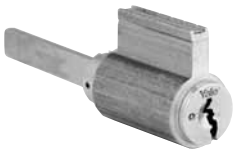

## security cylinders

Security cylinders contain two independent locking mechanisms. The first is a traditional 6- or 7-pin tumbler mechanism with spool drivers for greatly increased picking resistance.

The second is an innovative 5-tumbler rotating disc mechanism with sidebar engagement. The rotating discs are spring loaded and block the bottom of the keyway.

**Illustration**

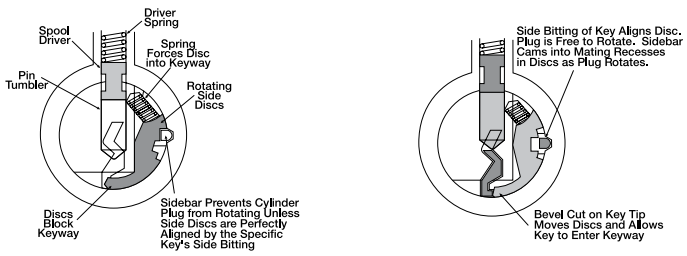

# cylinders

## 107S Schlage® cylinder adapter kit

Used to modify *Schlage* cylinder for fit in the 5400LN.
P/N 14-5407-0300-048

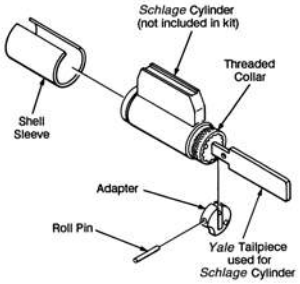


## other manufacturer keyway cylinders

| Illustration | Description | Model Number | Number of Pins |
|---|---|---|---|
| | Best® Keyway Cylinder. Available keyed random, master keyed or uncombinated. Specify keyway A, B, C, D, E, F, G, H, J, K, L or M. | A600 | 6 or 7 |
| 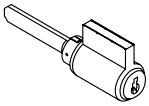 | Corbin Russwin “L4”, Corbin “60”, Russwin “D1”, Sargent® “LA” or Schlage® “E” Keyway. Specify keyway. Available keyed random. | 3804* | 6 |
| 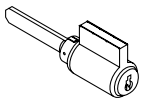 | Schlage® “C” Keyway. Available 0-bitted or keyed random. | 2802 | 6 |

***3804 cylinders require the 107S cylinder adapter kit to fit the 5400LN locksets. These cylinders are not ANSI/BHMA certified.**

## levers accepting SFIC and other manufacturers' large format interchangeable cores

| Description | Prefix | Number of Pins |
|---|---|---|
| SFIC (Accepts all Small Format Interchangeable Cores) | B<br>(i.e. B-AU, B-MO, B-PB) | 6 or 7 |
| Medeco®, ASSA® (LFIC) | M*<br>(i.e. M-AU) | 6 |
| Schlage® (LFIC) | SI<br>(i.e. SI-AU, SI-PB, SI-MO) | 6 |

***Medeco®, ASSA® option available only with AU lever. *(Note: For Medeco 32 series cores.)***
**LFIC = Large Format Interchangeable Core**
**SFIC = Small Format Interchangeable Core**

# latchbolts

## plain latchbolts

Model No. 693 supplied standard with all 5400LN series locksets without locking function. Standard plain latchbolt has a 2-1/4" (57mm) x 1-1/8" (29mm) beveled front with a 2-3/4" (70mm) backset and a 1/2" (13mm) bolt throw. Optional latchbolts with a greater backset/throw available to special order.

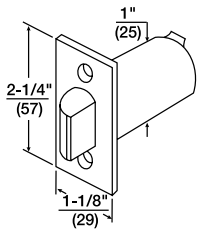


| Model No. | Front | Backset | Throw | Front Width | Latch Diameter |
|---|---|---|---|---|---|
| 693 | Beveled | 2-3/4" (70mm) | 1/2" (13mm) | 1-1/8" (29mm) | 1" (25mm) |
| F693 | Flat | 2-3/4" (70mm) | 1/2" (13mm) | 1-1/8" (29mm) | 1" (25mm) |
| 3693 | Beveled | 3-3/4" (95mm) | 1/2" (13mm) | 1-1/8" (29mm) | 1" (25mm) |

**Note: for 3/4" throw applications, only deadlocking latchbolts available.**

## deadlocking latchbolts

Deadlocking latchbolt Model No. 694 supplied standard with all 5400LN series locksets with locking function. Standard deadlocking latchbolt has a 2-1/4" (57mm) x 1-1/8" (29mm) beveled front with a 2-3/4" (70mm) backset and a 1/2" (13mm) bolt throw. Optional latchbolts with a greater backset/throw available to special order.

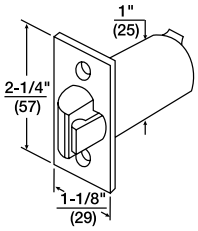


| Model No. | Front | Backset | Throw | Front Width | Latch Diameter |
|---|---|---|---|---|---|
| 694 | Beveled | 2-3/4" (70mm) | 1/2" (13mm) | 1-1/8" (29mm) | 1" (25mm) |
| F694 | Flat | 2-3/4" (70mm) | 1/2" (13mm) | 1-1/8" (29mm) | 1" (25mm) |
| 3694 | Beveled | 3-3/4" (95mm) | 1/2" (13mm) | 1-1/8" (29mm) | 1" (25mm) |
| 480B | Beveled | 2-3/4" (70mm) | 3/4" (19mm) | 1-1/8" (29mm) | 1" (25mm) |
| F480B | Flat | 2-3/4" (70mm) | 3/4" (19mm) | 1-1/8" (29mm) | 1" (25mm) |
| 3480B | Beveled | 3-3/4" (95mm) | 3/4" (19mm) | 1-1/8" (29mm) | 1" (25mm) |

**Note: For 2-3/8" backset, contact Customer Support.**

## backset extension links

All 5400LN Series locksets are supplied with standard latchbolts of 2-3/4" (70mm) backset; optional latchbolts with a 3-3/4" (95mm) backset are available to special order. Extension links are also available for attachment to 2-3/4" (70mm) or 3-3/4" (95mm) backset latchbolts to extend the backset to the desired length.

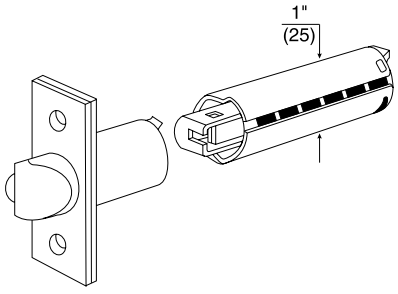


| Desired Backset | Latchbolt Backset | Order Extension List No. |
|---|---|---|
| 5" (127mm) | 2-3/4" (70mm) | 481DL |
| 6" (152mm) | 3-3/4" (95mm) | 481 |
| 7" (178mm) | 2-3/4" (70mm) | 482 |
| 8" (203mm) | 3-3/4" (95mm) | 482 |
| 18" (46cm) | 2-3/4" (70mm) | 484 |
| 19" (48cm) | 3-3/4" (95mm) | 484 |

**Other extension links up to 42" (1.06m) backset are available to special order.**

## attaching screws

(Not regularly supplied when latchbolts ordered separately).

- **For all latchbolts**
  #8-8-32 x 3/4" (19mm) Phillips flat head combination wood and machine screws
  Brass - P/N 81-2022-0416*
  Bronze - P/N 81-2032-0416*

- **Hollow Metal Doors**
  #8 - 32 x 1" (25mm) Phillips flat head machine screw
  Brass - P/N 81-0022-0420*
  Bronze - P/N 81-0032-0420*

***Specify finish required.**

## strikes

Yale® 5400LN locks are available with a variety of strike options. All strikes are located on the same vertical and horizontal center lines as the latchbolt. Some strikes are available in special lip lengths to accommodate varying thickness of doors and frames. To determine the proper length of the lip, measure from the center line of the strike to the edge of the jamb, accounting for any interfering trim (i.e. wood molding) and then add 1/4" (6mm) for curved lip. All strikes are reversible. Strikes are fabricated of either brass, bronze or stainless steel, depending on the lockset trim finish. When ordering strikes separately, specify the finish required.

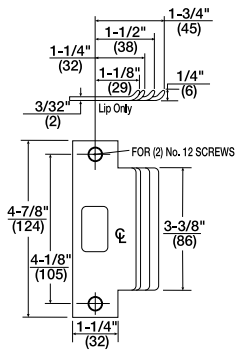


**Model No. 497 ANSI Strike (Standard)**
1-1/4" supplied standard. 1-1/8", 1-1/2", and 1-3/4" lip lengths available by special order. For door and frames with ANSI/ BHMA A156.115 preparations.

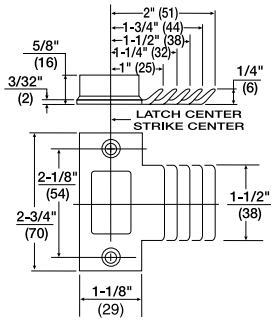


**Model No. 371 T-Strike (Optional)**
1-1/4" curved lip supplied standard. 1", 1-1/2", 1-3/4", and 2" curved lip lengths available by special order. Wrought strike box supplied.

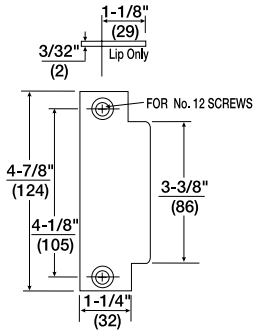


**Model No. 497B Blank ANSI Strike (Optional)**
Available to special order. Installed in frame with standard ANSI/BHMA A156.115 preparation to replace the strike when the lockset has been removed from the door.

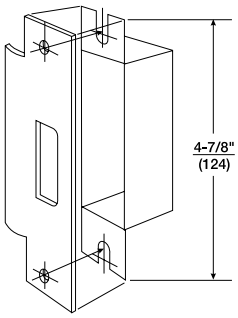


**Model No. 202 Strike Box for ANSI Strike (Optional)**
Specify 497 x 202

### attaching screws

(Not regularly supplied when strikes ordered separately).

**For Model No. 371 strike**
#8-8-32 x 3/4" (19mm) Phillips flat head combination wood and machine screw P/N-81-2012-0416.

**For Model No. 497 strike and 497B plate**
#12-12-24 x 1" (25mm) Phillips flat head combination wood and machine screw P/N-81-2012-0620.

**Note: When ordering strike plates or attaching screws individually, specify the finish required; i.e. 497 x 202 x 612; #81-2012-0620 x 612.**

## sample specification

All locksets shall be 5400LN Series Grade 1 cylindrical lever locksets as assembled by Yale Locks & Hardware.

Lockset chassis shall be constructed of heavy-gauge cold-rolled steel, trivalent chrome plated to protect against rust and corrosion. Locksets shall be adjustable to fit doors between 1-3/4" (44mm) to 2" (51mm) thick.

Locksets shall be non-handed, and shall install easily without the need for specialized installation tools. Locksets shall have separate anti-rotation throughbolts in the 6 o'clock and 12 o'clock position outside the 2-1/8" face bore, and shall have no exposed mounting screws.

Locksets shall have solid one-piece, cast levers without plastic inserts, and shall be a minimum of 5-1/4" in length. Levers shall operate independently, and shall have inside and outside lever return springs. Outside levers on the keyed locksets shall be removable only when the designated key is in the cylinder.

Locksets shall have the capability of accepting 7-pin standard, interchangeable core and high-security cylinders to provide expansion capacity for large master keyed systems.

Vandal resistant levers shall be offered as a standard feature in all locking functions, and shall be Free Wheeling in the locked condition. Locksets that are rigid in the locked condition or which must require resetting (breakaway) are not acceptable.

The latchbolt shall be made of stainless steel.

All locksets shall carry a comprehensive seven-year mechanical warranty. Locksets shall carry a lifetime warranty against lever sag or lever spring breakage.

All locksets shall comply with the following certifications:

- UL 3 Hour Fire Rating
- ANSI/BHMA A156.2 Series 4000, Grade 1
- ANSI A117.1 Accessibility Code
- ANSI/BHMA A156.115 or A156.115-W Preparation

# Pivot and Pivot Sets

Architectural Solutions for Durable and Efficient Hanging of Doors

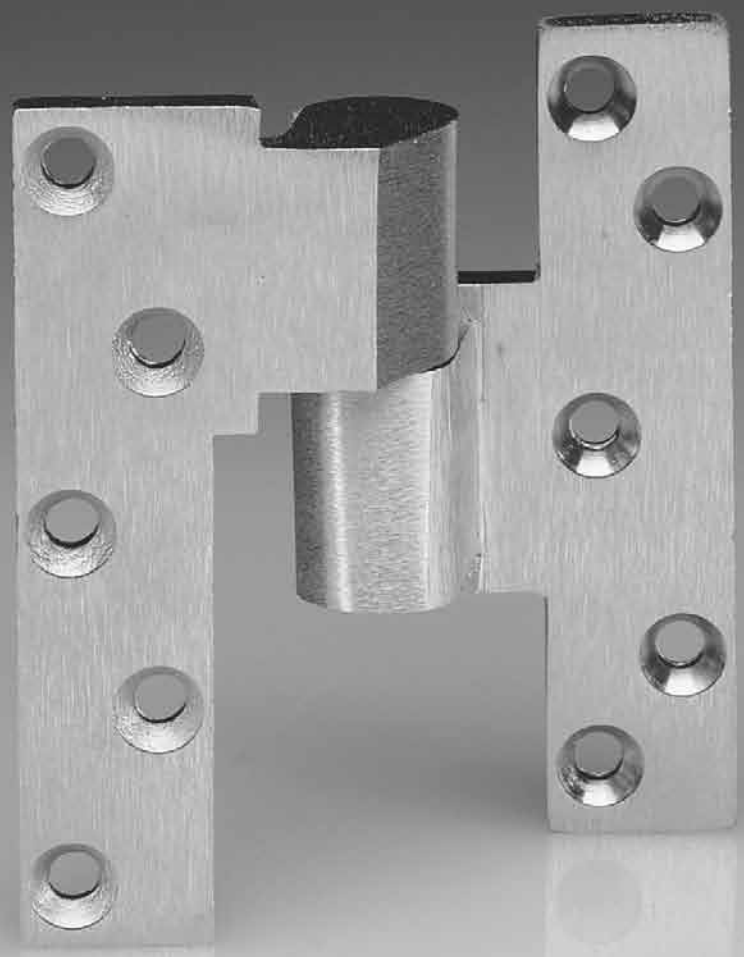

| HW-019 |
| --- |
| Revision Date: |
| **HW-020** |
| Revision Date: |

RIXSON

ASSA ABLOY

ASSA ABLOY, the global leader in door opening solutions

| HW-019 | HW-020 |
|---|---|
| Revision Date: | Revision Date: |

Pivot sets provide the best possible means of hanging a door. They are designed to work with the laws of physics to provide long-lasting performance and reliability.

- The weight of the door is supported at the bottom by the floor
  - Uses principles of gravity to its advantage
  - Door swings with less resistance
  - Heavier doors can be accommodated
- Reduced stress on frame
  - Fasteners are in shear, not tension
  - Eliminates door sag
  - Vertically adjustable
- Heavy-duty hardened steel spindles
  - Thrust bearing supports vertical load
  - Needle bearings and bushings for lateral force
  - Extra heavy-duty models also have an additional surface applied thrust bearing to handle heavier or high-traffic doors
- Offset pivots provide better weight distribution and can accommodate taller doors
- Intermediate pivots are used for alignment and to ensure proper installation of bottom pivot or floor closer
- Center hung pivots are used for aesthetics or if the pivot point is going to be moved nearer the lock edge of the door
- PIVOTS DO NOT RETURN DOORS TO CENTER. Pivots in this section are for door hanging means only. For door control see door closer catalog sections.

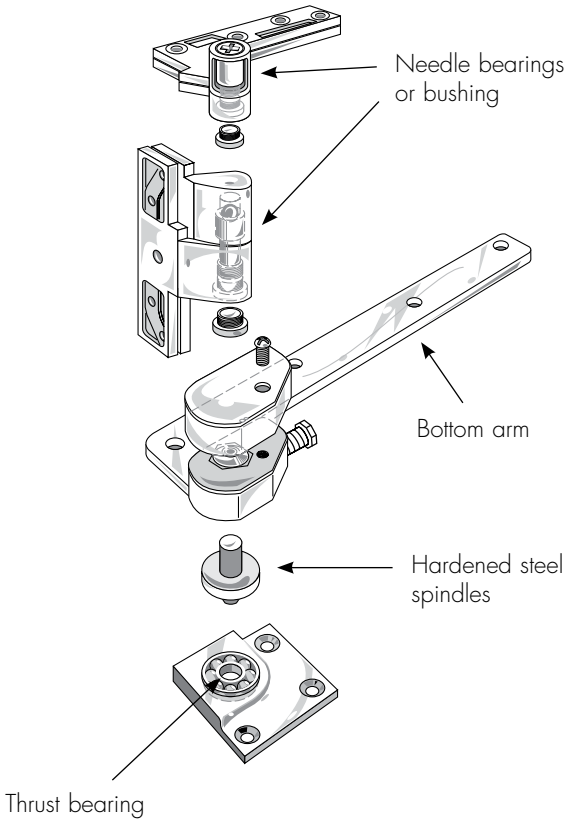


147 Pivot set and M19 Intermediate pivot shown (recommended)


Copyright © 2001-2016, Yale Security Inc., an ASSA ABLOY Group company. All rights reserved.
Reproduction in whole or in part without the express written permission of Yale Security Inc. is prohibited.

## 1. OFFSET VS. CENTER HUNG APPLICATION

| HW-019 | HW-020 |
|---|---|
| Revision Date: | Revision Date: |

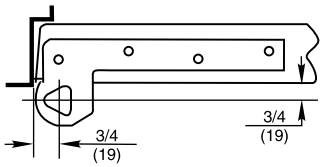


**3/4" Offset**

Pivot point located 3/4" from the heel edge of the door and 3/4" from face of door

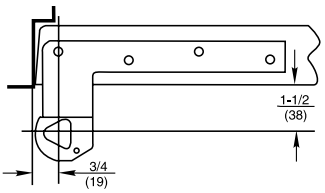


**1-1/2"Offset**

Pivot point located 3/4" from the heel edge of the door and 1-1/2" from face of door. Extended offsets should be used when there is cladding on the face of door or trim on the frame

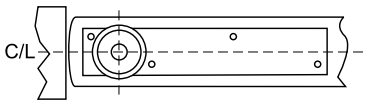


**Center Hung**

Pivot point centered in thickness of door.

## 2. SIZE OF DOOR (WIDTH, HEIGHT, THICKNESS)

Estimated door weights pounds per square foot (PSF)

| | DOOR THICKNESS | | |
|---|---|---|---|
| **DOOR MATERIAL** | **1-3/4"** | **2-1/4"** | **3"** |
| Hollow Metal | 6.5 | 7 | — |
| Solid Core Wood | 7 | 9 | 11.5 |
| Aluminum/Glass Storefront | 3.5 | 4 | — |
| Bullet Resistent | 20 | 21 | — |
| MDF | 7 | 9 | 11.5 |
| **TEMPERED GLASS** | **GLASS THICKNESS** | | |
| | **3/8"** | **1/2"** | **3/4"** |
| | 5 | 7 | 9.75 |
| **LEAD LINING** (add to door weight) | **LEAD THICKNESS** | | |
| | **1/16"** | **1/8"** | **1/4"** |
| | 5 | 8 | 9.75 |
| **3/4" CLADDING** (add to door weight) | **CLADDING MATERIAL** | | |
| | **Wood** | **Stone** | **Bronze** |
| | 3 | 10.5 | 28 |

**Example: 3/6 X 8/0 X 1/2" Tempered Glass Door**
Door: 28sq ft x 7lb./sq ft = 196lbs
**For doors of other sizes, consult factory**

**Example: 3/0 X 7/0 X 1-3/4" WD X 1/4" Lead lining**
Door: 21sq ft x 7lb./sq ft = 147lbs
Lead Lining: 9.75 = 204.75lbs
Total Door weight: 351.75lbs

## 2. SIZE OF DOOR (WIDTH, HEIGHT, THICKNESS)

| Application | Daily Cycles | Yearly Cycles | |
|---|---|---|---|
| Large department store entrance | 5,000 | 1,500,000 | |
| Large office building entrance | 4,000 | 1,200,000 | |
| Theater entrance | 1,000 | 365,000 | |
| School entrance | 1,250 | 225,000 | High |
| School restroom door | 1,250 | 225,000 | |
| Store or bank entrance | 500 | 150,000 | |
| Office building restroom door | 400 | 118,000 | |
| School corridor door | 80 | 15,000 | |
| Office building corridor door | 75 | 22,000 | Average |
| Store restroom door | 60 | 18,000 | |
| Residential entrance door | 40 | 15,000 | |
| Residential restroom door | 25 | 9,000 | |
| Residential hallway door | 10 | 3,600 | Low |
| Residential closet door | 6 | 2,200 | |



Copyright © 2001-2016, Yale Security Inc., an ASSA ABLOY Group company. All rights reserved.
Reproduction in whole or in part without the express written permission of Yale Security Inc. is prohibited.

| HW-019 | HW-020 |
|---|---|
| Revision Date: | Revision Date: |

**Fire Rated – Prefix F**
Pivots for fire rated doors (**up to 3 hours**) include a steel top pivot and must have additional steel intermediate pivots. For F519 pocket pivot, door assemblies must have been tested with pocket pivots.

**Twenty-minute label – Suffix - 20**
This UL rating is for 20-minute assemblies. Product with this rating has an authorized label.

**Handing**
All offset pivots and pivot sets are handed. Suffix RH or LH.

**Extended Spindle – Suffix extra length needed**
Any special coverings or severe door undercuts will affect the spindle height. In these applications, an extended spindle may be required. Most standard spindle heights accommodate door undercuts up to 1/2". Extended spindles available in 1/2" increments up to 2" longer than standard. See template.

**1-1/2" Offset – Suffix 1-1/2**
Offset is the distance from the face of the door to the pivot point. Extended offsets should not be used unless there is cladding on the face of the door or there is trim to clear on the frame. 1-1/2" offset arms and pivots are for doors with cladding or trim that project 3/4" from the face of the door. The greater the offset the less weight can be carried by the pivot.

**Less Top Pivot – Suffix LTP**
For conditions requiring special top pivots or for arch top doors, the pivot set should be ordered less top pivot – LTP. For offset installations, an additional load bearing intermediate (side jamb) M190 pivot is required. All intermediate pivots for that opening should be M190's, not M19's.

**Special Layouts – Suffix SPLO#**
Unique installations or specially engineered products are called special layouts. These numbers must be assigned by the technical support department and they must be called out specifically by their number when ordering.

**Door Thickness – Suffix 1-3/4", 2", 2-1/4", 2-1/2" or 3"**
When ordering L series pivot for lead-lined doors, the thickness of the door must be given. The purpose of the L product is to have screws spaced so they straddle the lead in the center of the door. Also used when lead lining is under the skins of the door. Recommended for use on extra heavy or high traffic doors.

**ElectroLynx® Connectors – Suffix QC – Number of Wires**
The plug-in connectors, with easy color coded wire system, eliminate matching wires. Must be used with ASSA ABLOY doors, frames and hardware. Available 4, 6, 8 or 12 wires for most products.

*Hardwiring Made Easy®*

## CERTIFICATIONS

All Rixson® pivots and pivot sets are in compliance with ANSI/BHMA A156.4 Standards. See individual products for sub sections.

## LIMITED WARRANTY

**Rixson** pivot sets are warranted for 2 years for defect. See **Rixson** Price Book for specific details of the limited warranty.

## SPECIFICATIONS

All pivots and pivot sets shall be of one manufacturer. All heavy-duty pivots shall have a minimum of 2 bearings internal to the bottom pivot. One shall be a thrust bearing and the other a needle bearing. Separate bearing surfaces shall be in the top pivot. Lead-lined door units and high traffic pivots shall have additional thrust bearing. Fire rated pivot sets shall have steel top pivots. Fire rated doors require steel intermediate pivots.


Copyright © 2001-2016, Yale Security Inc., an ASSA ABLOY Group company. All rights reserved.
Reproduction in whole or in part without the express written permission of Yale Security Inc. is prohibited.

RIXSON
ASSA ABLOY

## MODEL 117-1/4

| HW-019 | HW-020 |
|---|---|
| Revision Date: | Revision Date: |

### Application

- Interior Doors
- Weight to 250 lbs.*
- Door Width up to 3'6" (1067mm)
- Handed

ANSI /C07172

* Door size & weight guidelines are determined using the appropriate number of intermediate pivots

### Product Description & Features

- Standard top pivot 180 included
- 119 intermediate pivot recommended (order separately); see page 18
- Bottom pivot mortised into side jamb
- Not available for fire-rated doors
- Non-ferrous base material
- Doors 60" (1524mm) to 90" (2286mm) in height should use one intermediate pivot. Each additional 30" (762mm) of door height warrants another intermediate pivot
- 3/4" (19mm) offset (measured from centerline of pivot to face of door)
- Door edges must be beveled 1/8" in 2"
- Weight of door borne by floor
- Furnished with wood and machine screws
- Extended spindles available in 1/2" (13mm) increments up to 2" (51mm) longer than standard

### Technical Information

Frame stop required

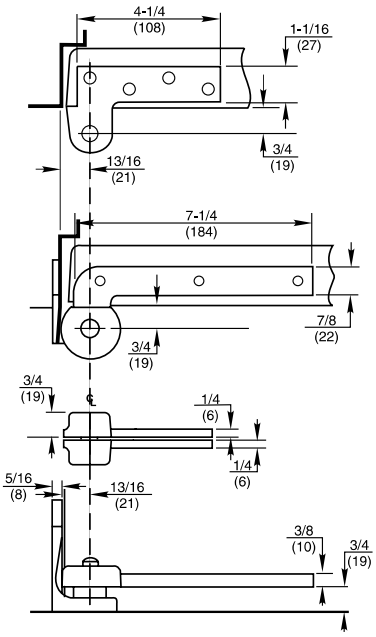


## MODEL 117

### Application

- Interior Doors
- Weight to 300 lbs.*
- Door Width up to 3'6" (1067mm)
- Handed

ANSI/C07162/C07202

* Door size & weight guidelines are determined using the appropriate number of intermediate pivots

### Product Description & Features

- Standard top pivot 180 included
- 119 intermediate pivot recommended (order separately); see page 18
- Bottom pivot mortised into floor
- Available for fire door assemblies up to three hours – specify F117. Intermediate pivot required by UL. Specify FM19, (order separately), see page 18
- For 20-minute label suffix "–20" to the part number
- Non-ferrous base material
- Doors up to 90" (2286mm) in height should use one intermediate pivot. Each additional 30" (762mm) of door height warrants another intermediate pivot
- 3/4" (19mm) offset (measured from centerline of pivot to face of door)
- Available for 1-1/2" (38mm) offset (door weight 150 lbs) for doors with cladding or frame molding.
- Door edges must be beveled 1/8" in 2"
- Furnished with wood and machine screws
- Extended spindles available in 1/2" (13mm increments up to 2" (51mm) longer than standard
- Doors will swing 180°, trim permitting

### Technical Information

Frame stop required

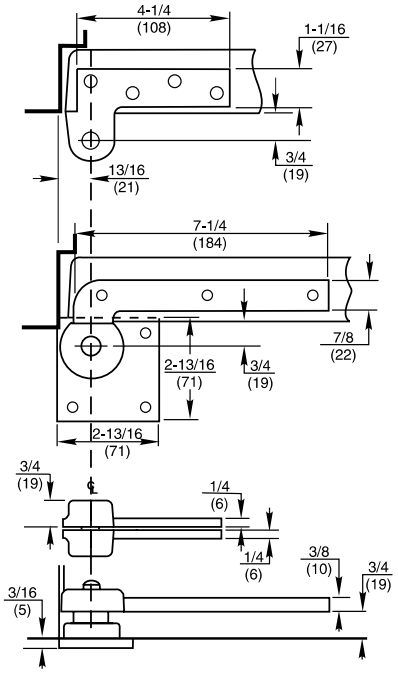




Copyright © 2001-2016, Yale Security Inc., an ASSA ABLOY Group company. All rights reserved.
Reproduction in whole or in part without the express written permission of Yale Security Inc. is prohibited.

## MODEL 173

| HW-019 | HW-020 |
|---|---|
| Revision Date: | Revision Date: |

### Application

- Interior Doors
- Weight 150 lbs
- Door Sizes up to 3'0" x 8'0" x 1-3/4"
- Handed

ANSI/C07162/C07202

### Product Description & Features

- Standard top pivot 180 included
- 119 intermediate pivot recommended for all doors over 6'8" (order separately) see page 18
- Bottom pivot mounts directly to concrete floor
- Uses same arm and cap as 117 pivot set
- Non-ferrous base metal
- 3/4" offset only (measured from centerline of pivot to face of door)
- Available for 1-1/2" (38mm) offset **(door weight 100 lbs)** for doors with cladding or frame molding
- Door edges must be beveled 1/8" in 2"
- Furnished with wood and metal screws
- 3/8" vertical adjustment
- No spindle extensions available
- Door will swing 180°, trim permitting

### Technical Information

Frame stop required

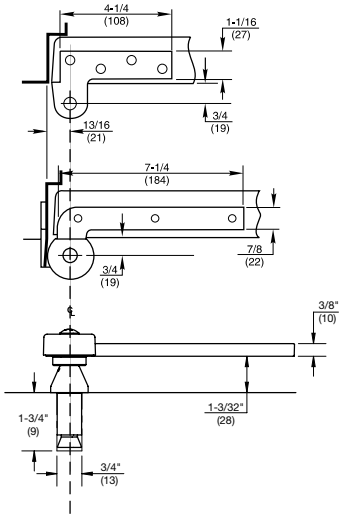


## MODEL 147

### Application

- Exterior or Interior Doors
- Weight to 600 lbs.*
- Door Width up to 4'0" (1219mm)
- Handed

ANSI/C07162/C07202

* Door size & weight guidelines are determined using the appropriate number of intermediate pivots

### Product Description & Features

- Standard top pivot 180 included
- M19 intermediate pivot required (order separately); see page 18
- Bottom pivot mounts directly to floor
- Uses same arm and cap as 27 floor closer
- Available for fire door assemblies up to three hours (ferrous material) – specify F147. Intermediate pivot required by UL. Specify FM19 (order separately), see page 18
- For 20-minute label suffix "–20" to the part number
- Non-ferrous base material
- Doors 60" (1524mm) to 90" (2286mm) in height should use one intermediate pivot. Each additional 30" (762mm) of door height warrants another intermediate pivot
- 3/4" (19mm) offset (measured from centerline of pivot to face of door)
- Available for 1-1/2" (38mm) offset (**door weight 350 lbs.**) for doors with cladding or frame molding
- Door edges must be beveled 1/8" in 2"
- Furnished with wood and machine screws
- Extended spindles available in 1/2" (13mm) increments up to 2" (51mm) longer than standard
- Doors will swing 180°, trim permitting

### Technical Information

Frame stop required

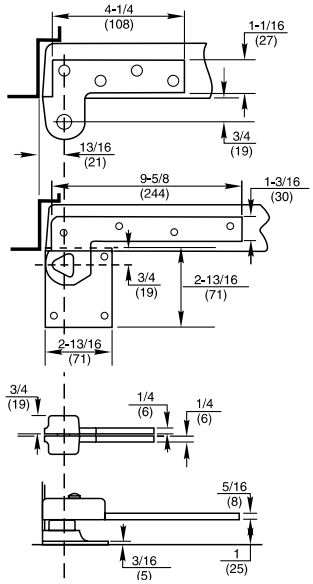




Copyright © 2001-2016, Yale Security Inc., an ASSA ABLOY Group company. All rights reserved.
Reproduction in whole or in part without the express written permission of Yale Security Inc. is prohibited.

RIXSON
ASSA ABLOY

## MODEL L147

| HW-019 | HW-020 |
|---|---|
| Revision Date: | Revision Date: |

### Application

- Exterior or Interior Doors
- Lead-Lined/Heavy/High Traffic Doors
- Weight to 800 lbs.
- Door Width up to 4'0" (1219mm) Handed

ANSI/C07162/C07202

### Product Description & Features

- Standard top pivot L180 included
- ML19 intermediate pivot required (order separately), see page 19
- Bottom pivot mounts directly to floor
- Doors with lead lining under the skin should also use this product.
- Screw holes in top pivot and bottom arm spaced to straddle lead lining in the middle of the door
- Available for fire door assemblies up to three hours for 1-3/4" (44mm) doors only (ferrous material) – specify FL147. Intermediate pivot required by UL. Specify FML19 (order separately), see page 19
- For 20-minute label suffix "–20" to the part number
- Non-ferrous base material
- Doors 60" (1524mm) to 90" (2286mm) in height should use one intermediate pivot. Each additional 30" (762mm) of door height warrants another intermediate pivot
- Available to accommodate lead in door thicknesses 1-3/4" (44mm), 2" (51mm), 2-1/4" (57mm), 2-1/2" (64mm), or 3" (76mm) – specify when ordering
- 3/4" (19mm) offset (measured from centerline of pivot to face of door)
- Door edges must be beveled 1/8" in 2"
- Furnished with wood and machine screws
- Extended spindles available in 1/2" (13mm) increments up to 2" (51mm) longer than standard
- Doors will swing 180°, trim permitting

### Technical Information

Frame stop required

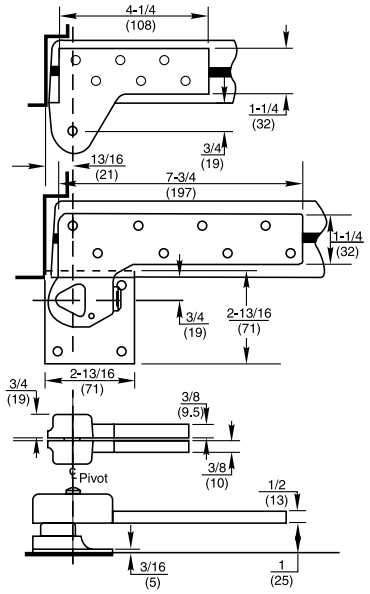


1-3/4" door shown



Copyright © 2001-2016, Yale Security Inc., an ASSA ABLOY Group company. All rights reserved.
Reproduction in whole or in part without the express written permission of Yale Security Inc. is prohibited.

| HW-019 | HW-020 |
|---|---|
| Revision Date: | Revision Date: |

## MODEL 547

### Application

- Exterior or Interior Doors
- For Arch Top Doors or Overhead
- Concealed Closers
- Weight to 500 lbs.
- Door Width up to 3'6" (1067mm)
- Handed

ANSI/C07162 (modified)/C07202

### Product Description & Features

- Set consists of two each M190 intermediate pivots and bottom pivot
- Bottom pivot mounts directly to floor
- Available for fire door assemblies up to three hours. Specify F547. Intermediate pivots FM190 included
- For 20-minute label suffix "–20" to the part number
- Non-ferrous base material
- Doors 60" (1524) to 90" (2286mm) in height have two intermediate pivots. Each additional 30" (762mm) of door height warrants another intermediate pivot
- 3/4" (19mm) offset (measured from centerline of pivot to face of door)
- Door edges must be beveled 1/8" in 2"
- Furnished with wood and machine screws
- Extended spindles available in 1/2" (13mm) increments up to 2" (51mm) longer than standard
- Doors will swing 180°, trim permitting

### Technical Information

Frame stop required

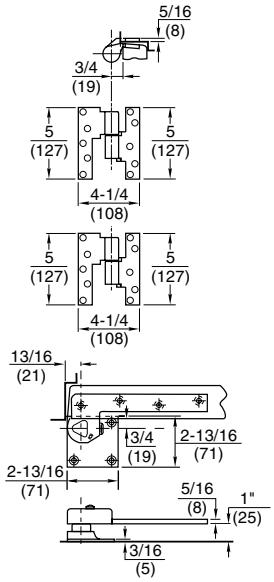


## MODEL 165

### Application

- Exterior or Interior Doors
- For Doors Without Bottom Pivots
- Weight to 300 lbs.
- Door Width up to 3'6" (1067mm)
- Handed

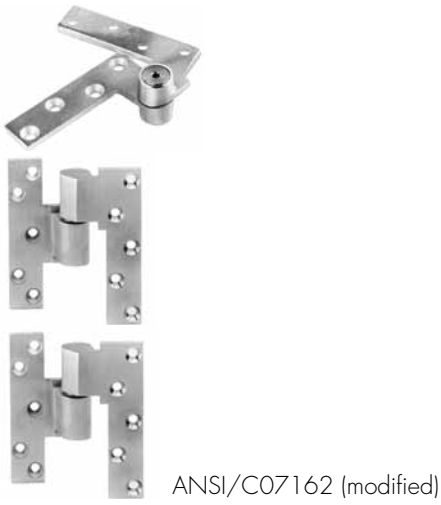

ANSI/C07162 (modified)

### Product Description & Features

- Set consists of one H180 top pivot and two each M190 intermediate pivots
- Not available for fire door assemblies
- Non-ferrous base material
- Doors 60" (1524mm) to 90" (2286mm) in height have two intermediate pivots. Each additional 30" (762mm) of door height warrants another intermediate pivot
- 3/4" (19mm) offset (measured from centerline of pivot to face of door)
- Door edges must be beveled 1/8" in 2"
- Furnished with wood and machine screws
- Doors will swing 180°, trim permitting

### Technical Information

Frame stop required

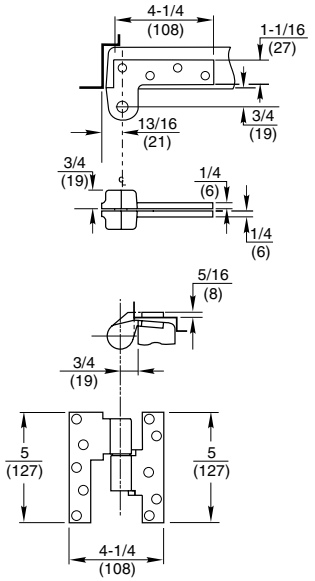




Copyright © 2001-2016, Yale Security Inc., an ASSA ABLOY Group company. All rights reserved.
Reproduction in whole or in part without the express written permission of Yale Security Inc. is prohibited.

RIXSON
ASSA ABLOY

## MODEL 195

| HW-019 | HW-020 |
|---|---|
| Revision Date: | Revision Date: |

### Application

- Exterior or Interior Doors
- Weight to 450 lbs.*
- Door Width up to 4'0" (1219mm) Handed

ANSI/C07172

* Door size & weight guidelines are determined using the appropriate number of intermediate pivots

### Product Description & Features

- Standard top pivot 180 included
- 119 or M19 intermediate pivots are recommended (order separately), see page 18
- Bottom pivot mortised into side jamb
- Pivot set can be vertically adjusted up to 3/16" (5mm) after installation without the use of shims
- Doors 60" (1524mm) to 90" (2286mm) in height should use one intermediate pivot. Each additional 30" (762mm) of door height warrants another intermediate pivot
- Non-ferrous base material
- Available for fire door assemblies up to three hours. Specify F195. Intermediate pivot required by UL. Specify FM19 (order separately), see page 18
- 3/4" (19mm) offset (measured from centerline of pivot to face of door)
- Door edges must be beveled 1/8" in 2"
- Weight of door is borne by floor portion
- Furnished with wood and machine screws
- Extended spindles available in 1/2" (13mm) increments up to 2" (51mm) longer than standard
- Doors will swing 180°, trim permitting

### Technical Information

Frame stop required

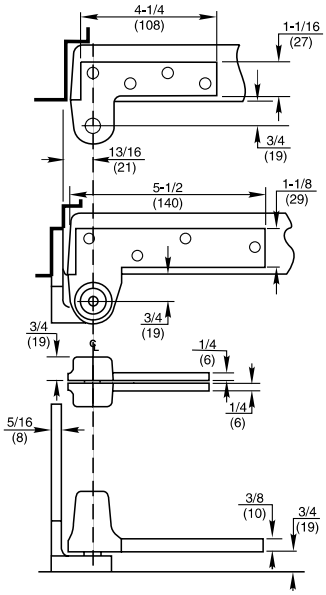




Copyright © 2001-2016, Yale Security Inc., an ASSA ABLOY Group company. All rights reserved.
Reproduction in whole or in part without the express written permission of Yale Security Inc. is prohibited.

## MODEL 117-1/2

| HW-019 | HW-020 |
|---|---|
| Revision Date: | Revision Date: |

### Application

- Exterior or Interior Doors
- Weight to 650 lbs.*
- Door Width up to 4'0" (1219mm)
- Handed

ANSI/C07121/C07202

* Door size & weight guidelines are determined using the appropriate number of intermediate pivots

### Product Description & Features

- Standard top pivot 180 included
- M19 intermediate pivot required (order separately), see page 18
- Bottom pivot mortised into floor
- Available for fire door assemblies up to three hours (ferrous material) – specify F117-1/2. Intermediate pivot required by UL. Specify FM19 (order separately), see page 18
- For 20-minute label suffix "–20" to the part number
- Non-ferrous base material
- Doors 60" (1524mm) to 90" (2286mm) in height should use one intermediate pivot. Each additional 30" (762mm) of door height warrants another intermediate pivot
- 3/4" (19mm) offset (measured from centerline of pivot to face of door)
- Available for 1-1/2" (38mm) offset (**door weight 350 lbs.**) for doors with cladding or frame molding
- Door edges must be beveled 1/8" in 2"
- Furnished with wood and machine screws
- Extended spindles available in 1/2" (13mm) increments up to 2" (51mm) longer than standard
- Doors will swing 180°, trim permitting

### Technical Information

Frame stop required

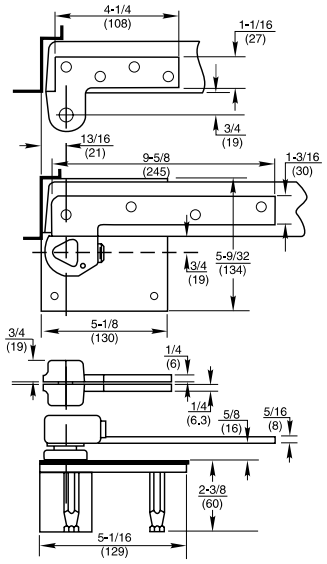




Copyright © 2001-2016, Yale Security Inc., an ASSA ABLOY Group company. All rights reserved.
Reproduction in whole or in part without the express written permission of Yale Security Inc. is prohibited.

RIXSON
ASSA ABLOY

## MODEL L117

| HW-019 | HW-020 |
|---|---|
| Revision Date: | Revision Date: |

### Application

- Exterior or Interior Doors
- Lead-Lined/Heavy/High Traffic Doors
- Weight to 1,750 lbs.*
- Door Width up to 4'0" (1219mm)
- Handed

ANSI/C07111

* Door size & weight guidelines are determined using the appropriate number of intermediate pivots

### Product Description & Features

- Standard top pivot L180 included
- ML19 intermediate pivot required (order separately), see page 19
- Bottom pivot mortised into floor
- Available for fire door assemblies up to three hours (ferrous material). Specify FL117. Intermediate pivot required by UL. Specify FML19 (order separately), see page 19. Note: UL listing for 1-3/4" thick doors only
- Available to accommodate lead in door thicknesses 1-3/4" (44mm), 2" (51mm), 2-1/4" (57mm), 2-1/2" (64mm), or 3" (76mm) – specify when ordering
- Additional thrust bearing for greater load capacity
- Doors 60" (1524mm) to 90" (2286mm) in height should use one intermediate pivot. Each additional 30" (762mm) of door height warrants another intermediate pivot
- For 20-minute label suffix "–20" to the part number
- Non-ferrous base material for top pivot
- 3/4" (19mm) offset (measured from centerline of pivot to face of door)
- Door edges must be beveled in 1/8" in 2"
- Furnished with wood and machine screws
- Extended spindles available in 1/2" (13mm) increments up to 2" (51mm) longer than standard
- Doors will swing 180°, trim permitting

### Technical Information

Frame stop required

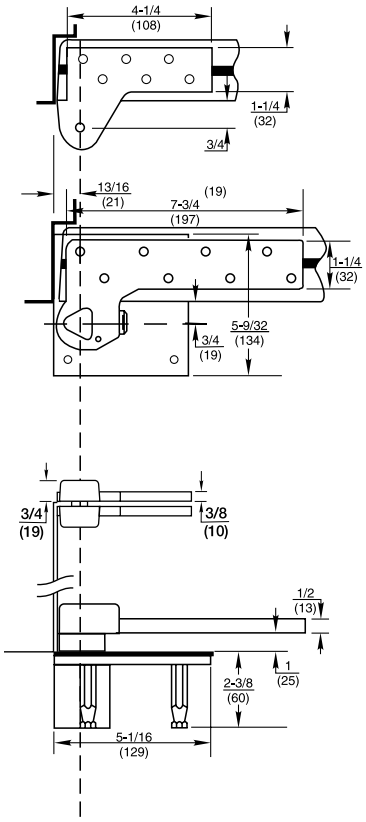


Pivot for 1-3/4" door shown



Copyright © 2001-2016, Yale Security Inc., an ASSA ABLOY Group company. All rights reserved.
Reproduction in whole or in part without the express written permission of Yale Security Inc. is prohibited.

## MODEL 180

| HW-019 | HW-020 |
|---|---|
| Revision Date: | Revision Date: |

### Application

- Full Mortise
- Non-handed

### Product Description & Features

- Standard top pivot for most offset pivot sets and floor closers
- Oil-impregnated sintered bronze bushing
- Non-ferrous base material
- Available for fire door assemblies (ferrous material) – specify F180 or FH180
- For 20-minute label suffix "–20" to the part number
- 3/4" (19mm) offset (measured from centerline of pivot to face of door)
- Available for 1-1/2" (38mm) offset
- Furnished with wood and machine screws
- Available with longer than standard pivot pins. Increments are 1/4" (6mm), 1/2" (13mm), 3/4" (19mm) only
- For extra wide or high traffic prefix "H" – H pivots have heavy-duty needle bearings; available in 1-1/2" (38mm) offset

### Technical Information

Frame stop required

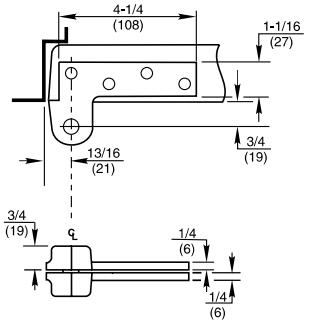


## MODEL 180 X 102

### Application

- Full Mortise
- Handed

### Product Description & Features

- Special top pivot for doors in deep reveals or unusual door details where one leaf is too long for the normal door or frame portion
- Oil-impregnated sintered bronze bushings
- Non-ferrous base metal
- Available for 1-1/2" (38mm) offset
- May be inverted
- Furnished with wood and machine screws
- Available with longer than standard pivot pins. Increments are 1/4" (6mm), 1/2" (13mm), 3/4" (19mm) only

### Technical Information

Frame stop required

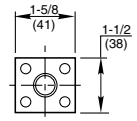


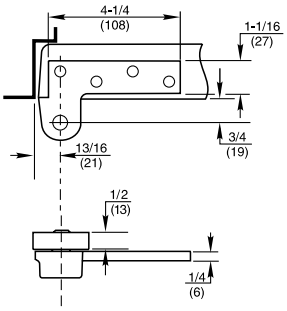




Copyright © 2001-2016, Yale Security Inc., an ASSA ABLOY Group company. All rights reserved.
Reproduction in whole or in part without the express written permission of Yale Security Inc. is prohibited.

RIXSON
ASSA ABLOY

| HW-019 | HW-020 |
|---|---|
| Revision Date: | Revision Date: |

## MODEL L180

### Application

- Lead-Lined/Heavy/High
- Traffic Doors
- Full Mortise
- Non-handed

### Product Description & Features

- Standard top pivot for L147, L117 pivots and L27 floor closers
- Doors with lead lining under the skin should also use this product
- Screw holes spaced to straddle lead in the middle of the door
- Available to accommodate lead lined door thicknesses: 1-3/4" (44mm), 2" (51mm), 2-1/4" (57mm), 2-1/2" (64mm), or 3" (76mm) – specify when ordering
- Available for fire door assemblies for 1-3/4" (19mm) doors only (ferrous material). Specify FL180
- For 20-minute label suffix "–20" to the part number
- Non-ferrous base material
- 3/4" (19mm) offset (measured from centerline of pivot to face of door)
- Furnished with wood and machine screws
- Available with longer than standard pivot pins. Increments are 1/4" (6mm), 1/2" (13mm), 3/4" (19mm) only

### Technical Information

Frame stop required

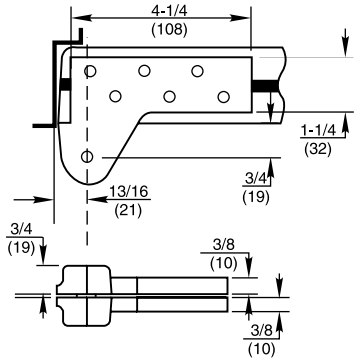


1-3/4" door shown

## MODEL FA180

### Application

- Asylum Design
- Full Mortise
- Handed

### Product Description & Features

- Standard top pivot for SEC27-180 floor closer packages
- Optional top pivot for institutional use or installations where flat surfaces are objectionable
- For fire door assemblies
- Ferrous base material
- 3/4" (19mm) offset (measured from centerline of pivot to face of door)
- Furnished with wood and machine Torx® screws
- Available with longer than standard pivot pins. Increments are 1/4" (6mm), 1/2" (13mm), 3/4" (19mm) only

### Technical Information

Frame stop required

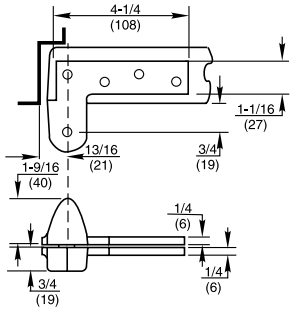




Copyright © 2001-2016, Yale Security Inc., an ASSA ABLOY Group company. All rights reserved.
Reproduction in whole or in part without the express written permission of Yale Security Inc. is prohibited.

## MODEL 280

| HW-019 | HW-020 |
|---|---|
| Revision Date: | Revision Date: |

### Application

- Half Surface
- Handed

ANSI/C07501

### Product Description & Features

- Flush door and frame application only
- Optional top pivot where door portion cannot be mortised
- Available for fire door assemblies (ferrous material) – specify F280
- Non-ferrous base material
- 3/4" (19mm) offset (measured from centerline of pivot to face of door)
- 1-3/4" door only
- Contact factory if door is not flush
- Furnished with wood and machine screws
- Available with longer than standard pivot pins. Increments are 1/4" (6mm), 1/2" (13mm), 3/4" (19mm) only

### Technical Information

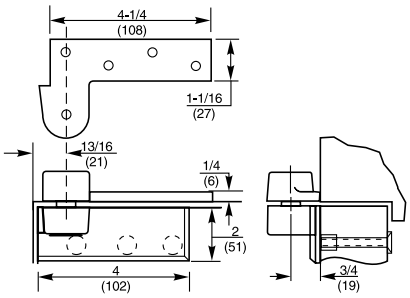


## MODEL 380

### Application

- Half Mortise
- Handed

ANSI/C07511

### Product Description & Features

- Flush door and frame application only
- Optional top pivot where jamb portion cannot be mortised
- Designed for channel iron door frames with aluminum, hollow metal or wood doors
- Available for fire door assemblies (ferrous material) – specify F380
- Door portion from L180 pivot is available if lead-lined doors are used – specify L380 and door thickness
- Non-ferrous base material
- 3/4" (19mm) offset (measured from centerline of pivot to face of door)
- Furnished with wood and machine screws
- Available with longer than standard pivot pins. Increments are 1/4" (6mm), 1/2" (13mm), 3/4" (19mm) only

### Technical Information

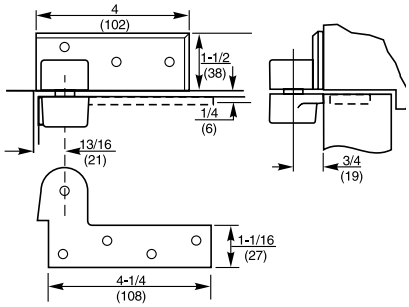



Copyright © 2001-2016, Yale Security Inc., an ASSA ABLOY Group company. All rights reserved.
Reproduction in whole or in part without the express written permission of Yale Security Inc. is prohibited.

RIXSON
ASSA ABLOY

## MODEL 480

| HW-019 | HW-020 |
|---|---|
| Revision Date: | Revision Date: |

### Application

- Full Surface
- Handed

ANSI/C07521

### Product Description & Features

- Flush door and frame application only
- Optional top pivot where door and jamb portion cannot be mortised
- Designed for channel iron door frames and any door where thru-bolting is advantageous
- Available for fire door assemblies (ferrous material) – specify F480
- Non-ferrous base material
- 3/4" (19mm) offset (measured from centerline of pivot to face of door)
- 1-3/4" door only
- Furnished with wood and machine screws
- Available with longer than standard pivot pins. Increments are 1/4" (6mm), 1/2" (13mm), 3/4" (19mm) only

### Technical Information

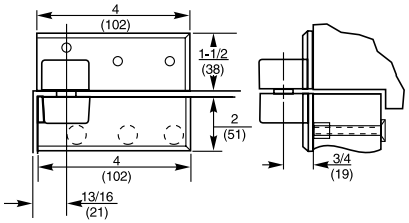


## MODEL 680

### Application

- Side Jamb Mounted
- Frame Portion
- Handed

### Product Description & Features

- Used where no frame exists above door, or where it is not possible to anchor pivot into header of frame
- Side jamb portion can be surface mounted or mortised
- Non-ferrous base material
- 3/4" (19mm) offset (measured from centerline of pivot to face of door)
- Door edges must be beveled in 1/8" in 2"
- Furnished with wood and machine screws

### Technical Information

Frame stop required

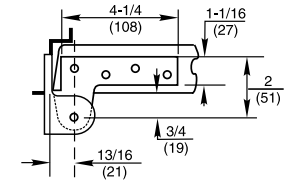


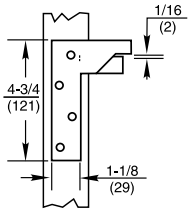


### Technical Information

Surface Mount Jamb Double Mortise Door

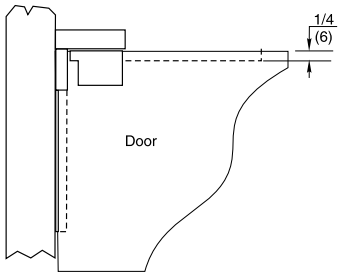


Mortise Jamb, Header and Door

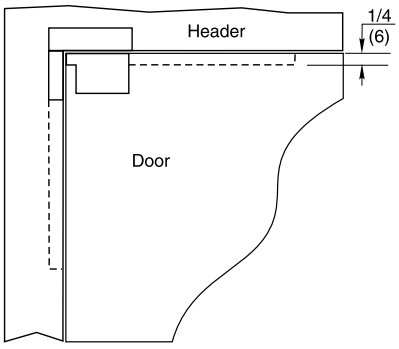


Mortise Jamb and Door

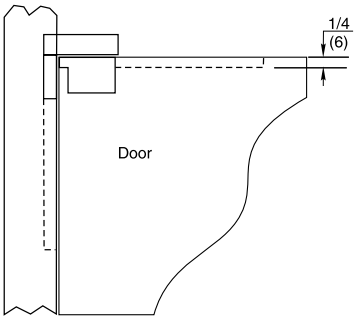




Copyright © 2001-2016, Yale Security Inc., an ASSA ABLOY Group company. All rights reserved.
Reproduction in whole or in part without the express written permission of Yale Security Inc. is prohibited.

| HW-019 | HW-020 |
|---|---|
| Revision Date: | Revision Date: |

## MODEL 119

### Application
- Full Mortise
- Handed

ANSI/C07382

### Product Description & Features
- Not load-bearing
- Maintains door alignment
- Available 3/4" (19mm) offset only
- Non-ferrous base material
- Doors 60" (1524mm) to 90" (2286mm) in height should use one intermediate pivot. Each additional 30" (762mm) of door height warrants another intermediate pivot
- Door edges must be beveled in 1/8" in 2"
- Used with 117, 117-1/4, 195 pivot sets and 127 and 427 floor closers
- Furnished with wood and machine screws

### Technical Information

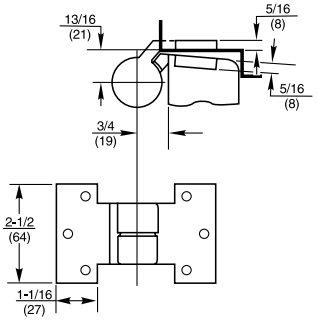


## MODEL M19

### Application
- Full Mortise
- Handed

ANSI/C07321/C07371

### Product Description & Features
- Not load-bearing
- Maintains door alignment
- Aids in installing floor closers and bottom pivots
- For 20-minute label suffix "–20" to the part number
- Non-ferrous base metal
- 3/4" (19mm) offset
- Available for 1-1/2" (38mm) offset
- Available for fire door assemblies (ferrous material) – specify FM19
- Doors 60" (1524mm) to 90" (2286mm) in height should use one intermediate pivot. Each additional 30" (762mm) warrants another intermediate pivot
- Door edges must be beveled in 1/8" in 2"
- Furnished with wood and machine screws

### Technical Information

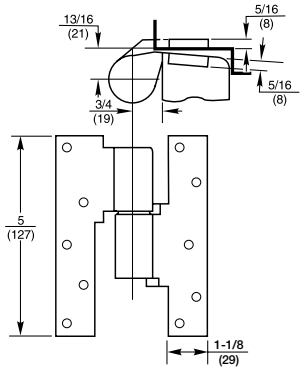


## MODEL M190

### Application
- Heavy-Duty Full Mortise
- Handed

ANSI/CO7321/CO7371

### Product Description & Features
Used when frame condition does not allow standard top pivot
- Lateral load-bearing
- Maintains door alignment
- Aids in installing floor closers and bottom pivots
- Heavy-duty needle bearing
- Non-ferrous base metal
- 3/4" (19mm) offset standard
- Available for 1-1/2" (38mm) offset
- Available for fire door assemblies (ferrous material) – specify FM190
- For 20-minute label suffix "–20" to part number
- Doors 60" (1524mm) to 90" (2286mm) in height should use one intermediate pivot. Each additional 30" (762mm) warrants another intermediate pivot
- Door edges must be beveled in 1/8" in 2"
- Furnished with wood and machine screws

### Technical Information

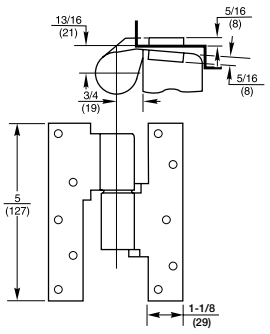



Copyright © 2001-2016, Yale Security Inc., an ASSA ABLOY Group company. All rights reserved.
Reproduction in whole or in part without the express written permission of Yale Security Inc. is prohibited.

RIXSON
ASSA ABLOY

## MODEL ML19

| HW-019 | HW-020 |
|---|---|
| Revision Date: | Revision Date: |

### Application

- Full Mortise
- Lead-Lined, Heavy or High Traffic Doors
- Handed

ANSI/C07311

### Product Description & Features

Screw holes spaced to straddle lead lining in center of door. Also use on extra heavy or high traffic door

- Load-bearing
- Maintains door alignment
- Aids in installing closers and pivots
- For 20-minute label suffix "–20" to the part number
- Available to accommodate door thicknesses 1-3/4" (44mm), 2" (51mm), 2-1/4" (57mm), 2-1/2" (64mm), or 3" (76mm) – specify thickness when ordering
- Non-ferrous base material
- Available for fire door assemblies – 1-3/4" (44mm) door only – specify FML19
- Doors 60" (1524mm) to 90" (2286mm) in height should use one intermediate pivot. Each additional 30" (762mm) warrants another intermediate pivot
- Door edges must be beveled in 1/8" in 2"
- Furnished with wood and machine screws

### Technical Information

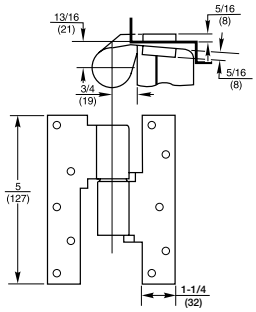


## MODEL FA19

### Application

- Full Mortise
- Asylum or High Security Applications
- Handed

ANSI/C07361

### Product Description & Features

Optional intermediate pivot for institutional use or installations where flat surfaces are objectionable

- Maintains door alignment
- Aids in installing bottom pivots
- 3/4" (19mm) offset
- May be used with fire door assemblies
- Ferrous base material
- Doors 60" (1524mm) to 90" (2286mm) in height should use one intermediate pivot. Each additional 30" (762mm) warrants another intermediate pivot
- Door edges must be beveled in 1/8" in 2"
- Furnished with wood and machine Torx® screws

### Technical Information

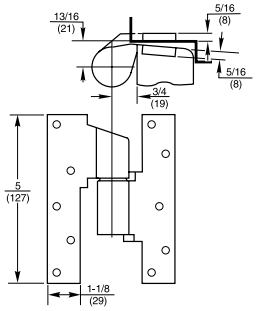




Copyright © 2001-2016, Yale Security Inc., an ASSA ABLOY Group company. All rights reserved.
Reproduction in whole or in part without the express written permission of Yale Security Inc. is prohibited.

## MODEL 219

| HW-019 | HW-020 |
|---|---|
| Revision Date: | Revision Date: |

### Application
- Half Surface
- Handed

ANSI/C07331

### Product Description & Features
- Flush door and frame applications only
- Optional intermediate pivot where door portion cannot be mortised
- Maintains door alignment
- Non-ferrous base material
- 3/4" (19mm) offset only
- 1-3/4" door only
- Doors up to 90" (2286mm) in height should use one intermediate pivot. Each additional 30" (762mm) warrants another intermediate pivot
- Door edges must be beveled in 1/8" in 2"
- Furnished with wood and machine screws

### Technical Information

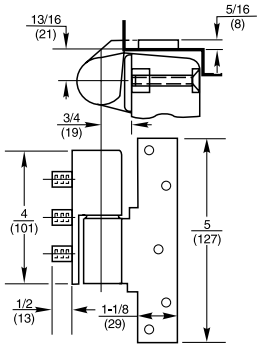


## MODEL 319

### Application
- Half Mortise
- Handed

ANSI/C07341

### Product Description & Features
- Flush door and frame applications only
- Optional intermediate pivot where jamb portion cannot be mortised
- Door portion from ML19 pivot is available if lead-lined door is used – specify L319 and door thickness
- Maintains door alignment
- Non-ferrous base material
- 3/4" (19mm) offset only
- Doors up to 90" (2286mm) in height should use one intermediate pivot. Each additional 30" (762mm) warrants another intermediate pivot
- Door edges must be beveled in 1/8" in 2"
- Furnished with wood and machine screws

### Technical Information

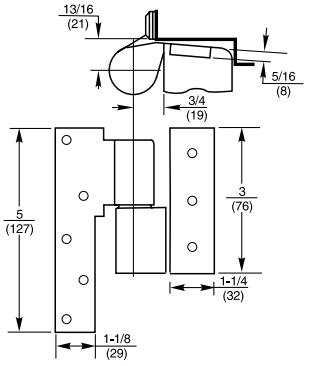


## MODEL 419

### Application
- Full Surface
- Handed

ANSI/C07351

### Product Description & Features
- Flush door and frame applications only
- Optional intermediate pivot where door and jamb portion cannot be mortised
- Maintains door alignment
- Non-ferrous base material
- 3/4" (19mm) offset only
- 1-3/4" door only
- Doors up to 90" (2286mm) in height should use one intermediate pivot. Each additional 30" (762mm) warrants another intermediate pivot
- Furnished with wood and machine screws

### Technical Information

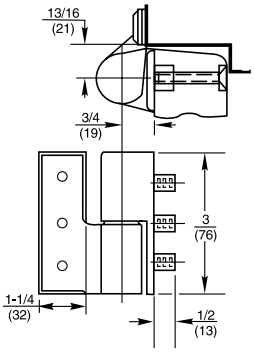



Copyright © 2001-2016, Yale Security Inc., an ASSA ABLOY Group company. All rights reserved.
Reproduction in whole or in part without the express written permission of Yale Security Inc. is prohibited.

RIXSON
ASSA ABLOY

## MODEL E-M19

| HW-019 | HW-020 |
|---|---|
| Revision Date: | Revision Date: |

### Application

- Offset Hung
- Electric Pivot for Power Transfer
- Handed

Whenever power transfer pivots are used, the leaves must not be separated

### Product Description & Features

- Not load-bearing
- Door and jamb portion are factory assembled and cannot be separated
- Always use M19 intermediate pivot to install door
- Specify four, six, eight or twelve wires
- ElectroLynx® option available, suffix "QC#" (number of wires)
- 24-gauge wire is rated at 2 amps for low voltage, class II wiring applications
- Available for fire door assemblies (ferrous material) – specify E-FM19
- For 20-minute label, suffix "–20" to the part number
- 3/4" (19mm) offset
- Available 1-1/2" offset
- Door edges must be beveled in 1/8" in 2"
- Furnished with wood and machine screws

### Technical Information

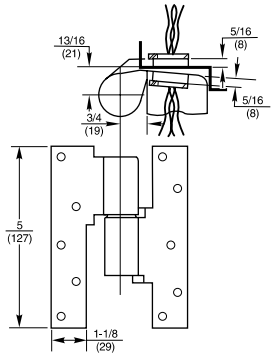


Hardwiring Made Easy®
ElectroLynx

## MODEL E-M19U

### Application

- Offset Hung
- Electric Pivot for Power Transfer
- Handed
- For Electrified Panic Devices with Large Inrush Current

Whenever power transfer pivots are used, the leaves must not be separated

### Product Description & Features

- Not load-bearing
- Always use M19 intermediate pivot to install door
- Door and jamb portion are factory assembled and cannot be separated
- Junction boxes are supplied with pivots
- Two each 18 gauge wires. Each wire is rated at 2 amps continuously. UL listed for 24-volt, Class I wiring
- ElectroLynx® option not available
- Not available in ferrous material
- 3/4" (19mm) offset
- Door edges must be beveled in 1/8" in 2"
- Furnished with wood and machine screws

### Technical Information

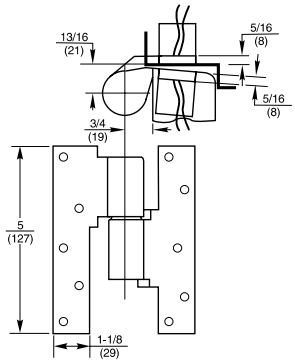




Copyright © 2001-2016, Yale Security Inc., an ASSA ABLOY Group company. All rights reserved.
Reproduction in whole or in part without the express written permission of Yale Security Inc. is prohibited.

## MODEL E-ML19

| HW-019 | HW-020 |
|---|---|
| Revision Date: | Revision Date: |

### Application

- Offset Hung
- Lead Lined or Extra Heavy Doors
- Electric Pivot for Power Transfer
- Handed

Whenever power transfer pivots are used, the leaves must not be separated

### Product Description & Features

- Not load-bearing
- Always use ML19 intermediate pivot to install door
- Door and jamb portion are factory assembled and cannot be separated
- Specify four, six, eight or twelve wires
- ElectroLynx® option available, suffix "QC#" (number of wires)
- 24-gauge wire is rated at 2 amps for low voltage, class II wiring applications
- Available for fire door assemblies (ferrous base material) specify E-FML19
- For 20-minute label, suffix "–20" to the part number
- 3/4" (19mm) offset
- Available 1-3/4" doors only
- Door edges must be beveled in 1/8" in 2"
- Furnished with wood and machine screws

### Technical Information

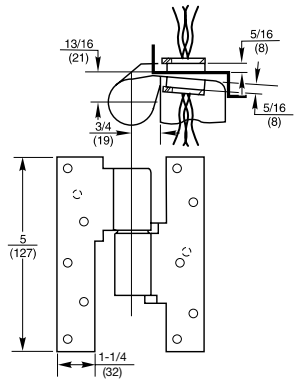


Hardwiring Made Easy®
ElectroLynx®

## MODEL CS-M19

### Application

- Offset Hung
- Electric Pivot for Door Position Monitoring
- Handed

### Product Description & Features

- Magnetically activated reed switch in frame leaf of pivot monitors door position
- Always use M19 intermediate pivot to install door
- Not load-bearing
- Adjusting screw is easy to set on-site after installation. Screw is disguised as an installation screw
- Switch rated at 0.3 amps and 28 volts maximum, three each 22-gauge wires
- ElectroLynx® option not available
- 3/4" (19mm) offset
- Available 1-1/2" offset
- Door edges must be beveled in 1/8" in 2"
- Furnished with wood and machine screws

### Technical Information

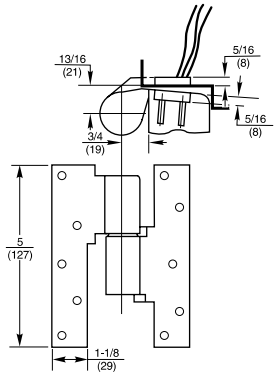



Copyright © 2001-2016, Yale Security Inc., an ASSA ABLOY Group company. All rights reserved.
Reproduction in whole or in part without the express written permission of Yale Security Inc. is prohibited.

RIXSON
ASSA ABLOY

## CS-E-M19

| HW-019 | HW-020 |
|---|---|
| Revision Date: | Revision Date: |

### Application

- Offset Hung
- Electric Pivot for Door Position Monitoring + Power Transfer
- Handed

Whenever power transfer pivots are used, the leaves must not be separated

### Product Description & Features

- Always use M19 intermediate pivot to install door
- Not load-bearing
- Magnetically activated reed switch in frame leaf of pivot monitors door position
- Adjusting screw is easy to set on-site after installation. Screw is disguised as an installation screw
- Door and jamb portion are factory assembled and cannot be separated
- For power transfer specify four, six, eight or twelve wires. 24-gauge wire is rated @ 2 amps for low voltage, class II wiring application
- Switch rated at 0.3 amps and 28 volts maximum. Three each 22 gauge wires only
- ElectroLynx® option available for power transfer only, suffix "QC#" (number of wires) – Specify four, six, eight or twelve wires
- Not available in ferrous material
- 3/4" (19mm) offset
- For 20-minute label, suffix –20
- Available 1-1/2" offset
- Door edges must be beveled in 1/8" in 2"
- Furnished with wood and machine screws

### Technical Information

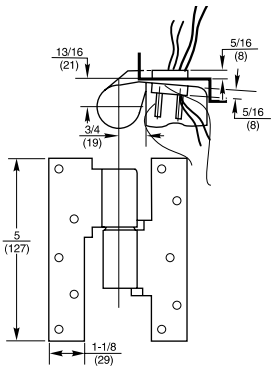


Hardwiring Made Easy®
ElectroLynx

## CS-ML19

### Application

- Offset Hung
- Lead Lined or Extra Heavy Doors
- Electric Pivot For Door Position Monitoring
- Handed

### Product Description & Features

- Always use ML19 intermediate pivot to install door
- Not load-bearing
- Door and jamb portion are factory assembled and cannot be separated
- Magnetically activated reed switch in frame leaf of pivot monitors door position
- Adjusting screw is easy to set on-site after installation. Screw is disguised as an installation screw
- Switch rated at 0.3 amps and 28 volts maximum, three each 22 gauge wires
- ElectroLynx® option not available
- 3/4" (19mm) offset
- 1-3/4" door only
- Door edges must be beveled in 1/8" in 2"
- Furnished with wood and machine screws

### Technical Information

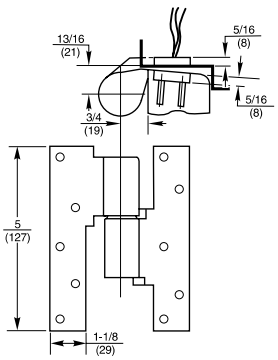




Copyright © 2001-2016, Yale Security Inc., an ASSA ABLOY Group company. All rights reserved.
Reproduction in whole or in part without the express written permission of Yale Security Inc. is prohibited.

## MODEL F519

| HW-019 | HW-020 |
|---|---|
| Revision Date: | Revision Date: |

### Application

- Pocket Door Pivot
- Non-handed

ANSI/C07611

### Product Description & Features

- Full mortise, non-handed pivot for pocket door applications
- Heavy-duty steel pivot with ball bearings
- Allows doors to swing 90°
- Minimum three pocket pivots per door
- Doors 60" (1524mm) to 90" (2286mm) in height require four pocket pivots. Every additional 30" (762mm) of door height warrants another pocket pivot
- UL listed for all labeled pocket fire-door assemblies up to and including 3 hours
- Fire-rated door assemblies must have been tested with pocket pivots
- Furnished with wood and machine screws

### Technical Information

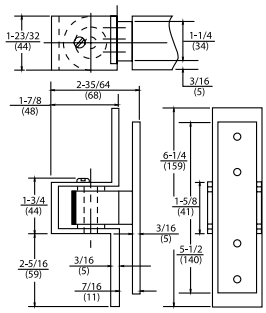


## MODEL E-F519

### Application

- Pocket Door Pivot
- Electric Pivot for Power Transfer
- Non-handed

### Product Description & Features

- Full mortise, non-handed pivot for pocket door applications
- Always use as middle pivot
- Available with four wires only
- ElectroLynx® option available, suffix "QC4"
- 24-gauge wire is rated at 2 amps for low voltage, class II wiring applications
- Heavy-duty steel pivot with ball bearings
- Allows doors to swing 90°
- Door and jamb portions are factory assembled and cannot be separated
- Minimum three pocket pivots per door
- Doors over 90" (2286mm) in height require four pocket pivots. Every additional 30" (762mm) of door height warrants another pocket pivot
- Fire-rated door assemblies must have been tested with pocket pivots
- Furnished with wood and machine screws

### Technical Information

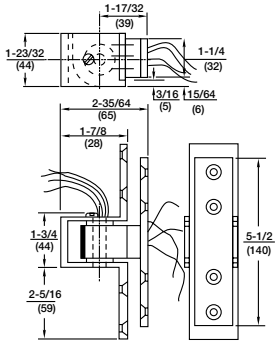


Hardwiring Made Easy®
ELECTRO Lynx®


Copyright © 2001-2016, Yale Security Inc., an ASSA ABLOY Group company. All rights reserved.
Reproduction in whole or in part without the express written permission of Yale Security Inc. is prohibited.

RIXSON
ASSA ABLOY

## MODEL 127-3/4

| HW-019 | HW-020 |
|---|---|
| Revision Date: | Revision Date: |

### Application

- Interior Doors
- Weight to 200 lbs.
- Door Sizes up to 3'6"x 8'6" (1067 x 2591mm)
- Non-handed

ANSI/C07042

Center hung pivots are door hanging means only. To close doors, see floor closer sections of the catalogs.

### Product Description & Features

- Standard top pivot 320 included
- Bottom pivot mortised into side jamb
- Weight of door borne by floor
- Pivot point centered in thickness of door
- Door must have radius on pivot edge
- Not allowed for use on labeled doors and frames
- Pivot point remains constant at 1-1/4 from the edge of the door
- Furnished with wood and machine screws
- Available with extended spindles in 1/2" (13mm) increments up to 2" (51mm) longer than standard

### Technical Information

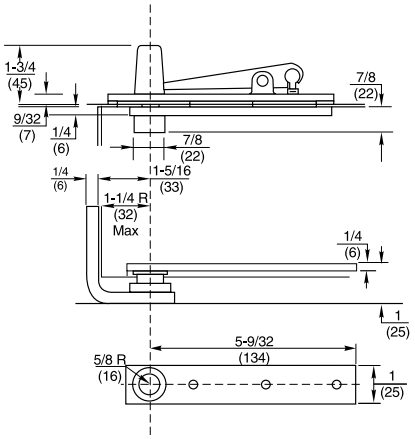


## MODEL 128-3/4

### Application

- Interior Doors
- Weight to 250 lbs.
- Door Sizes up to 3'6"x 8'6" (1067 x 2591mm)
- Non-handed

ANSI/C07032

Center hung pivots are door hanging means only. To close doors, see floor closer sections of the catalogs.

### Product Description & Features

Identical to the 127-3/4 except:

- Bottom pivot mounts directly to floor

### Technical Information

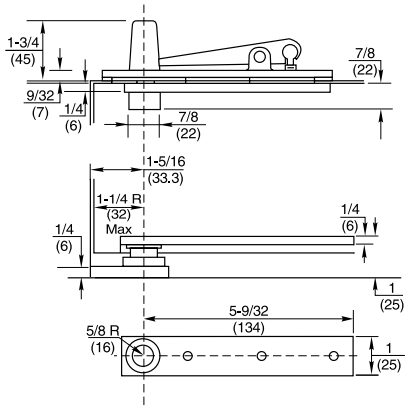




Copyright © 2001-2016, Yale Security Inc., an ASSA ABLOY Group company. All rights reserved.
Reproduction in whole or in part without the express written permission of Yale Security Inc. is prohibited.

## MODEL 370

| HW-019 | HW-020 |
|---|---|
| Revision Date: | Revision Date: |

### Application

- Exterior or Interior Doors
- Weight to 500 lbs.
- Door Sizes up to 3'8"x 8'6"* (1118 x 2591mm)
- Non-handed

ANSI NO/C07032

Center hung pivots are door hanging means only. To close doors, see floor closer sections of the catalogs.

* For doors taller than 8'6" use top pivot 345 in lieu of 340

### Product Description & Features

- Standard top pivot 340 included
- Bottom pivot mounts directly to floor
- Pivot point centered in thickness of door
- Door must have radius on pivot edge
- Pivot set features sealed bearings for protection against weather and debris
- Not allowed for use on labeled doors and frames
- Furnished with wood and machine screws
- Available with extended spindles in 1/2" (13mm) increments up to 2" (51mm) longer than standard

### Technical Information

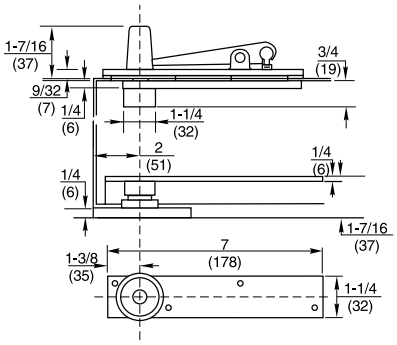


## MODEL 117-3/4

### Application

- Exterior or Interior Doors
- Weight to 600 lbs.
- Door Sizes up to 4'0"x 8'6"* (1219 x 2591mm)
- Non-handed

Center hung pivots are door hanging means only. To close doors, see floor closer sections of the catalogs.

* For doors taller than 8'6" use top pivot 345 in lieu of 340

### Product Description & Features

- Standard top pivot 340 included
- Bottom pivot is mortised into floor
- Pivot point centered in thickness of door
- Door must have radius on pivot edge
- Heavy-duty bearings
- Pivot set features sealed bearings for protection against weather and debris
- Not allowed for use on labeled doors and frames
- Furnished with wood and machine screws
- Available with extended spindles in 1/2" (13mm) increments up to 2" (51mm) longer than standard

### Technical Information

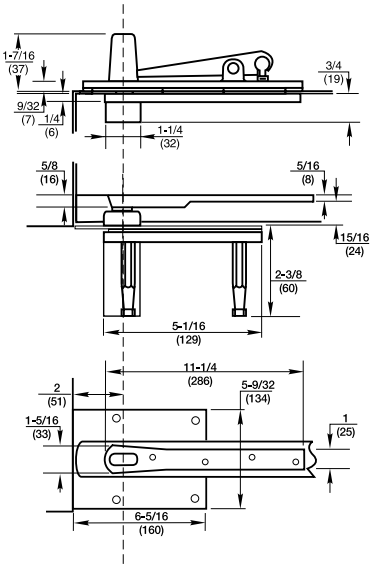




Copyright © 2001-2016, Yale Security Inc., an ASSA ABLOY Group company. All rights reserved.
Reproduction in whole or in part without the express written permission of Yale Security Inc. is prohibited.

RIXSON
ASSA ABLOY

## MODEL H117-3/4

| HW-019 | HW-020 |
|---|---|
| Revision Date: | Revision Date: |

### Application

- Exterior or Interior Doors
- Weight to 1,000 lbs.
- Door Sizes up to 4'0"x 8'6"* (1219 x 2591mm)
- Non-handed

ANSI/C07011

Center hung pivots are door hanging means only. To close doors, see floor closer sections of the catalogs.

* For doors taller than 8'6" use top pivot H345 in lieu of H340

### Product Description & Features

- Standard top pivot H340 included
- Bottom pivot is mortised into floor
- End load arm for minimum 2" (51mm) thick doors
- Pivot point centered in thickness of door
- Additional surface applied thrust bearing
- Door must have radius on pivot edge
- Pivot point remains constant at 2-3/4 from the edge of the door
- Pivot set features sealed bearings for protection against weather and debris
- Not allowed for use on labeled doors and frames
- Furnished with wood and machine screws
- Available with extended spindles in 1/2" (13mm) increments up to 2" (51mm) longer than standard

### Technical Information

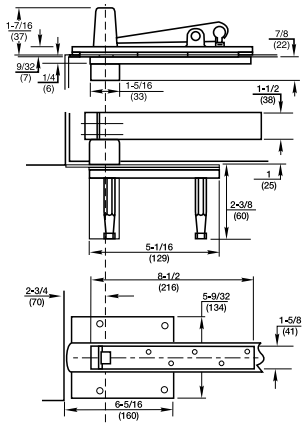


## MODEL H117-3/4 X 587 ARM

ANSI/C07011

Center hung pivots are door hanging means only. To close doors, see floor closer sections of the catalogs.

* For doors taller than 8'6" use top pivot H345 in lieu of H340

### Product Description & Features

- Standard top pivot H340 included
- Bottom pivot is mortised into floor
- Special side load arm for 1-3/4" thick doors or for moving pivot point toward lock edge of door
- Pivot point centered in thickness of door
- Additional surface applied thrust bearing
- Door must have radius on pivot edge
- Pivot set features sealed bearings for protection against weather and debris
- Not allowed for use on labeled doors and frames
- Furnished with wood and machine screws
- Available with extended spindles in 1/2" (13mm) increments up to 2" (51mm) longer than standard

### Technical Information

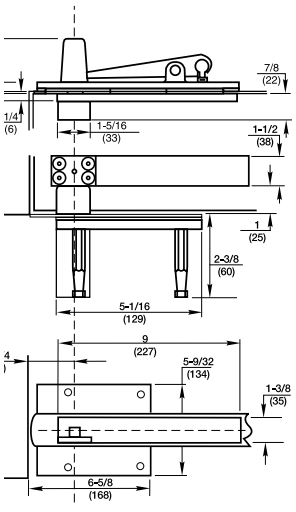




Copyright © 2001-2016, Yale Security Inc., an ASSA ABLOY Group company. All rights reserved.
Reproduction in whole or in part without the express written permission of Yale Security Inc. is prohibited.

## MODEL 176

| HW-019 | HW-020 |
|---|---|
| Revision Date: | Revision Date: |

### Application

- Interior Doors
- Weight up to 150 lbs.
- Door Sizes up to 3'0" x 8'0"
- Door Thickness 1-3/8 to 1-3/4
- Non Handed

ANSI/CO7032

### Product Description & Features

- Standard top pivot 320 included
- Bottom pivot mounts directly into concrete floor
- Pivot point centered in thickness of the door
- Door must have radius on pivot edge
- Not allowed for use on labeled doors and frames
- Furnished with wood and machine screws
- 3/8" vertical adjustment
- No spindle extensions available

### Technical Information

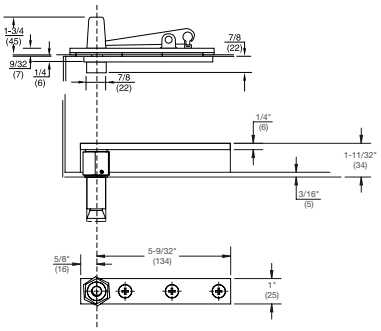


## MODEL 178

### Application

- Interior Doors
- Weight to 175 lbs.
- Door Sizes up to 3'0" x 8'0" (914 x 2591mm)
- Non Handed

### Product Description & Features

- Used on full glass doors
- Doors do not return to center
- Accommodates glass thicknesses 3/8"-1/2"
- Includes special floor portion, top and bottom patch fittings and walking beam top pivot

### Technical Information

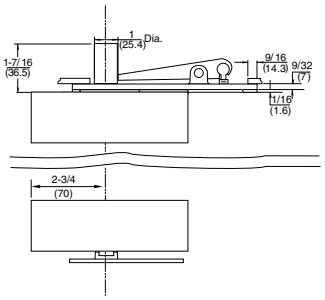


Center hung pivots are door hanging means only. To close doors see closer sections of the catalogs.*



Copyright © 2001-2016, Yale Security Inc., an ASSA ABLOY Group company. All rights reserved.
Reproduction in whole or in part without the express written permission of Yale Security Inc. is prohibited.

RIXSON
ASSA ABLOY

| HW-019 | HW-020 |
|---|---|
| Revision Date: | Revision Date: |

## MODEL 320

### Application
- Fully Concealed
- Non-handed

### Product Description & Features
- Standard top pivot for Models 127-3/4, 128-3/4, and 176 pivot sets
- Walking beam-type pivot – 1/2" (13mm) diameter pivot pin with 3/4" (19mm) engagement
- Oil-impregnated sintered bronze bushing
- Completely concealed when door is closed
- Furnished with wood and machine screws
- Available with longer than standard pivot pins. Increments are 1/4" (6mm), 1/2" (13mm), 3/4" (19mm) only

### Technical Information

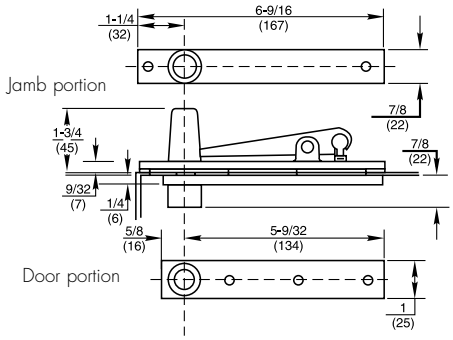


## MODEL 340

### Application
- Fully Concealed
- Non-handed

### Product Description & Features
- Standard top pivot for Models 370 and 117-3/4 pivot sets. Also used for 28, 30, 40 and 50 Series floor closers
- Walking beam-type pivot – 1/2" (13mm) diameter pivot pin with 3/4" (19mm) engagement
- Oil-impregnated sintered bronze bushing
- Completely concealed when door is closed
- Furnished with wood and machine screws
- Available with longer than standard pivot pins. Increments are 1/4" (6mm), 1/2" (13mm), 3/4" (19mm) only

### Technical Information

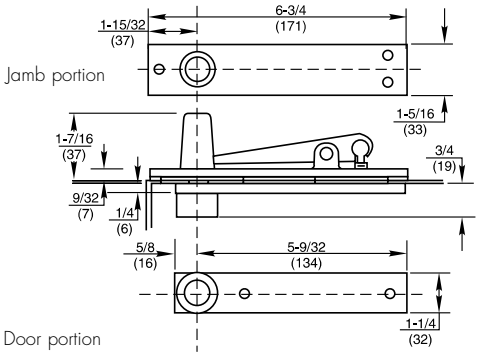


## MODEL H340

### Application
- Fully Concealed
- Heavy-Duty
- Non-handed

### Product Description & Features
- Standard top pivot for Model H117-3/4 pivot set. Also used for H28 and H40 Series floor closers
- Can be used with any floor closer or pivot set with pivot point 2-3/4, or greater, from edge of the door
- Walking beam-type pivot – 11/16" (17mm) diameter pivot pin with 3/4" (19mm) engagement
- Heavy-duty needle bearing
- Completely concealed when door is closed
- Furnished with wood and machine screws
- Available with longer than standard pivot pins. Increments are 1/4" (6mm), 1/2" (13mm), 3/4" (19mm) only

### Technical Information

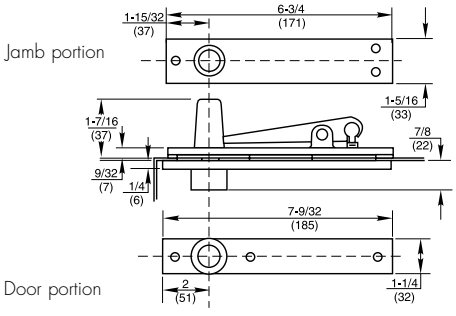




Copyright © 2001-2016, Yale Security Inc., an ASSA ABLOY Group company. All rights reserved.
Reproduction in whole or in part without the express written permission of Yale Security Inc. is prohibited.

## MODEL 345

| HW-019 | HW-020 |
|---|---|
| Revision Date: | Revision Date: |

### Application

- Fully Concealed
- Center Hung
- Non-handed
- Earthquake Tolerant
- Taller Doors

### Product Description & Features

- Optional top pivot
- Ideal for locations where there is a fear of dramatic building settling or for doors over 8'6" in height
- Long pivot pin engages in top of door 1-3/4" (44mm)
- Can be used with any center hung bottom pivot or floor closer. Order pivot set or floor closer LTP (less top pivot) with 345 on separate line item
- Walking beam-type pivot –1/2" (13mm diameter pivot pin
- Oil-impregnated sintered bronze bushing
- Completely concealed when door is closed
- Furnished with wood and machine screws

### Technical Information

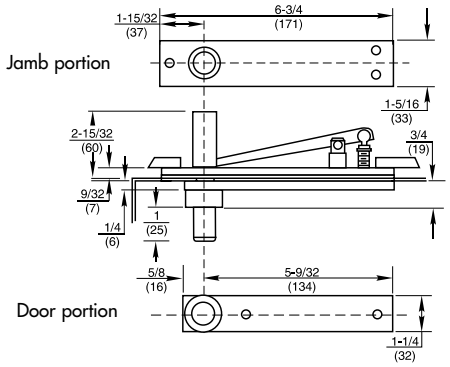


## MODEL H345

### Application

- Fully Concealed
- Center Hung
- Non-handed
- Earthquake Tolerant
- Taller Doors

### Product Description & Features

- Ideal for locations where there is a fear of dramatic building settling or for doors over 8'6" in height
- Long pivot pin engages in top of door 1-3/4"(44mm)
- Can be used with any center hung bottom pivot or floor closer whose pivot point is 2-3/4, or greater, from the edge of the door. Order pivot set or floor closer LTP (less top pivot) with H345 on separate line item
- Walking beam-type pivot – 11/16" (17mm) diameter pivot pin
- Heavy-duty needle bearing
- Completely concealed when door is closed
- Furnished with wood and machine screws

### Technical Information

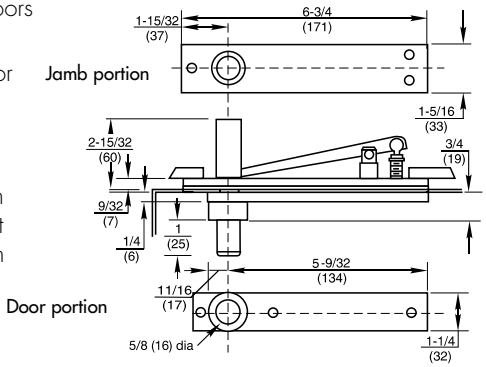




Copyright © 2001-2016, Yale Security Inc., an ASSA ABLOY Group company. All rights reserved.
Reproduction in whole or in part without the express written permission of Yale Security Inc. is prohibited.

RIXSON
ASSA ABLOY

## MODEL 340 X 102

| HW-019 | HW-020 |
|---|---|
| Revision Date: | Revision Date: |

### Application

- Fully Concealed
- Non-handed

### Product Description & Features

- Optional top pivot for doors or frames that have conflicts with other hardware
- Can be inverted. The walking beam portion would be installed the header of the frame
- No finish plate supplied
- If inverted, finish plate should be ordered and priced separately (see page 43 for 340 or 320 plate part numbers)
- Oil-impregnated sintered bronze bushing
- Completely concealed when door is closed
- Available with longer than standard pivot pins. Increments are 1/4" (6mm) up to 3/4" (19mm)
- Furnished with wood and machine screws
- For lighter weight doors use 320 x 102

### Technical Information

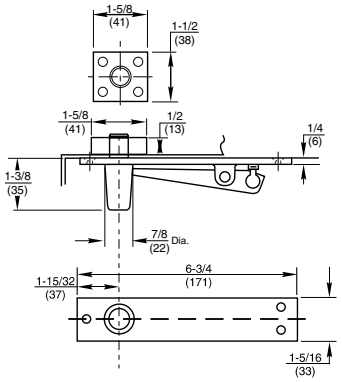


340 x 102 shown

## MODEL 340 X AP3

### Application

- Surface mounted
- Handed doors up to 3'6" wide

### Product Description & Features

- Used where no frame exists above door, or where it is not possible to anchor pivot into header of frame
- Center hung applications only
- Furnished with 340 door portion
- Part is handed to keep installation plate to inside of room or building
- Furnished with wood and machine screws

### Technical Information

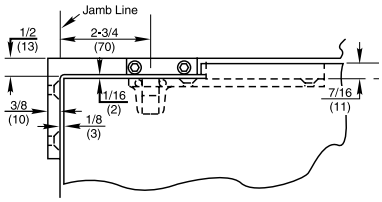




Copyright © 2001-2016, Yale Security Inc., an ASSA ABLOY Group company. All rights reserved.
Reproduction in whole or in part without the express written permission of Yale Security Inc. is prohibited.

## MODEL E-H340

| HW-019 | HW-020 |
|---|---|
| Revision Date: | Revision Date: |

### Application

- Center Hung
- Top Pivot for Power Transfer
- Non-handed

### Product Description & Features

- Walking beam type pivot –11/16" (17mm) diameter pivot pin with 3/4" (19mm) engagement
- Can be used with any center hung bottom pivot or floor closer. Order the pivot set LTP (less top pivot) with E-H340 as a separate line
- Heavy-duty needle bearing
- Specify two, four, six, eight or twelve wires
- Two-wire is available in 18 gauge and is not available ElectroLynx®
- Four, six, eight and twelve wires are 24 gauge and available in ElectroLynx®. Suffix QC# (number of wires)
- Completely concealed when door is closed
- Furnished with wood and machine screws

### Technical Information

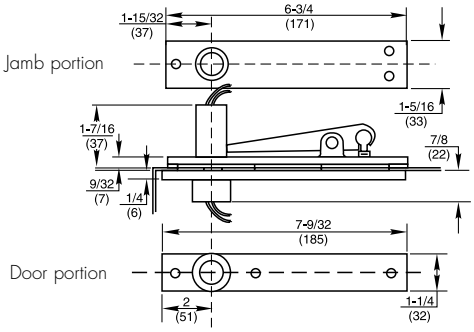


Hardwiring Made Easy®

ElectroLynx®

## MODEL E-H345

### Application

- Fully Concealed
- Center Hung
- Top Pivot for Power Transfer
- Non-handed
- Earthquake Tolerant
- Taller Doors

### Product Description & Features

- Walking beam-type pivot – 11/16" (17mm) diameter pivot pin
- Longer pivot pin throw engages in top of door 1-3/4" (44mm). Ideal for locations where there is a fear of dramatic building settling
- Can be used with any center hung bottom pivot or floor closer whose pivot point is 2-3/4", or greater, from the edge of the door. Order the pivot set LTP (less top pivot) with E-H345 as a separate line
- Used with heavy-duty pivots & floor closers
- Heavy-duty needle bearing
- For doors over 8'6" in height
- Specify two, four, six, eight or twelve wires
- Two-wire is available in 18 gauge and is not available with ElectroLynx®
- Four, six, eight and twelve wires are 24 gauge and available in ElectroLynx®. Suffix QC# (number of wires)
- Furnished with wood and machine screws

### Technical Information

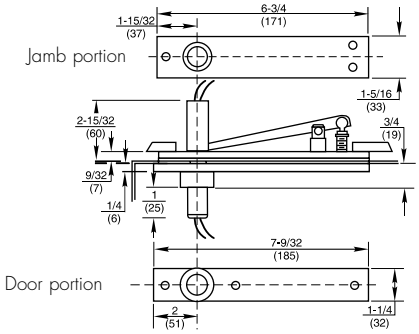


Hardwiring Made Easy®

ElectroLynx®



Copyright © 2001-2016, Yale Security Inc., an ASSA ABLOY Group company. All rights reserved.
Reproduction in whole or in part without the express written permission of Yale Security Inc. is prohibited.

RIXSON
ASSA ABLOY

| HW-019 | HW-020 |
|---|---|
| Revision Date: | Revision Date: |

## MODEL CS-340

### Application

- Center Hung
- Door Position Monitoring
- Non-handed

### Product Description & Features

- Walking beam type pivot
- Magnetically activated reed switch in frame of pivot monitors door position
- Adjusting screw is easy to set on-site after installation screw is concealed by cover plate
- Oil-impregnated sintered bronze bearing
- Completely concealed when door is closed
- Switch rated at 0.3 amps and 28 volts maximum, three wires, 22 gauge
- ElectroLynx® option not available
- Furnished with wood and machine screws

### Technical Information

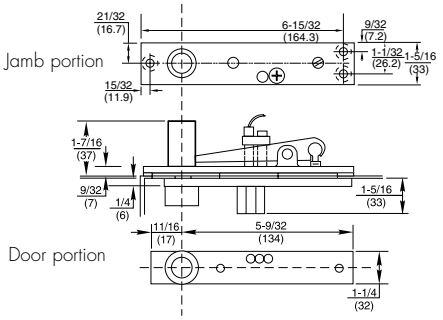


## MODEL CS-345

### Application

- Fully Concealed
- Center Hung
- Door Position Monitoring
- Non-handed
- Taller Doors

### Product Description & Features

- Longer pivot throw pin engages in top of door 1-3/4" (44mm). Ideal for locations where there is a fear of dramatic building settling or taller doors
- Can be used with any center hung bottom pivot or floor closer
- Magnetically activated reed switch monitors door position
- Adjusting screw is easy to set on-site after installation screw is concealed by cover plate
- Switch rated at 0.3 amps and 28 volts maximum, three wires, 22 gauge
- ElectroLynx® option not available
- Heavy-duty needle bearing
- Completely concealed when door is closed
- Furnished with wood and machine screws

### Technical Information

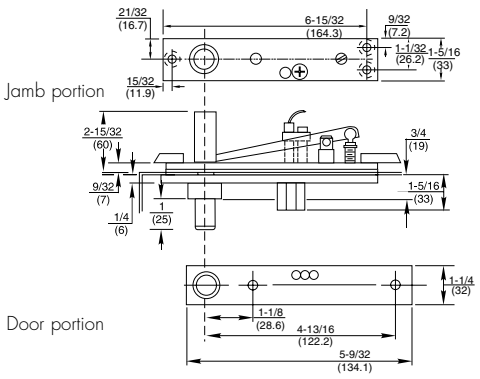




Copyright © 2001-2016, Yale Security Inc., an ASSA ABLOY Group company. All rights reserved.
Reproduction in whole or in part without the express written permission of Yale Security Inc. is prohibited.

| HW-019 | HW-020 |
|---|---|
| Revision Date: | Revision Date: |

| Prefix | Model | Offset | Center Hung | Standard Top Pivot | Available 3-Hour Fire Rated Doors | Handed | Maximum Door Weight** |
|---|---|---|---|---|---|---|---|
| | 117-1/4 | Yes | No | 180 | No | Yes | 250 |
| F | 117 | Yes | No | 180 | Yes | Yes | 300 |
| | 173 | Yes | No | 180 | No | Yes | 150 |
| | 173 x 1-1/2 | Yes | No | 180 | No | Yes | 100 |
| F | 117 x 1-1/2 | Yes | No | 180 | Yes | Yes | 150 |
| F | 147 | Yes | No | 180 | Yes | Yes | 600 |
| F | 147 x 1-1/2 | Yes | No | 180 | Yes | Yes | 350 |
| F* | L147 | Yes | No | L180 | Yes* | Yes | 800 |
| F | 547 | Yes | No | NA | Yes | Yes | 500 |
| | 165 | Yes | No | H180 | No | Yes | 300 |
| | 195 | Yes | No | 180 | No | Yes | 450 |
| F | 117-1/2 | Yes | No | 180 | Yes | Yes | 650 |
| F | 117-1/2 x1-1/2 | Yes | No | 180 | Yes | Yes | 450 |
| F* | L117 | Yes | No | L180 | Yes* | Yes | 1750 |
| | 127-3/4 | No | Yes | 320 | No | No | 200 |
| | 128-3/4 | No | Yes | 320 | No | No | 250 |
| | 370 | No | Yes | 340 | No | No | 500 |
| | 117-3/4 | No | Yes | 340 | No | No | 600 |
| | H117-3/4 | No | Yes | H340 | No | No | 1000 |
| | H117-3/4 x 587 | No | Yes | H340 | No | No | 1000 |
| | 176 | No | Yes | 320 | No | No | 150 |
| | 178 | No | Yes | Special | No | No | 175 |

*For 1-3/4" doors only

**Weight for offset product is based on 3/4" offset and the use of an intermediate pivot.

## HOW TO ORDER

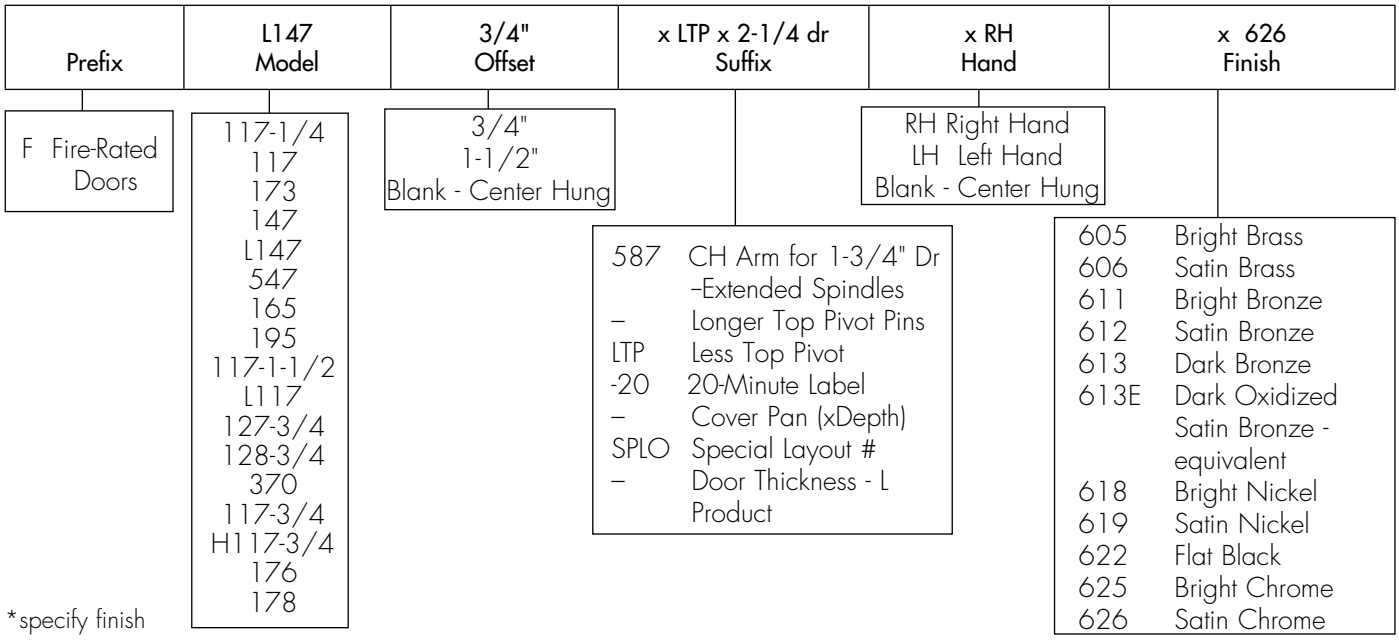




Copyright © 2001-2016, Yale Security Inc., an ASSA ABLOY Group company. All rights reserved.
Reproduction in whole or in part without the express written permission of Yale Security Inc. is prohibited.

| HW-019 | HW-020 |
|---|---|
| Revision Date: | Revision Date: |

## M19, M190, ML19, FA19, 219, 319, FM19, FM190, ALL ELECTRIFIED M19 INTERMED

| Model | Description |
|---|---|
| 107015-* | Metal Screws for One Leaf |
| 107115-* | Wood Screws for One Leaf |
| 181778-* | Hex Cap |
| **219, 319 and 419 Also Use:** | |
| 107059-* | Includes Screws and Backplate |
| | Torx® Available - Suffix "T" |

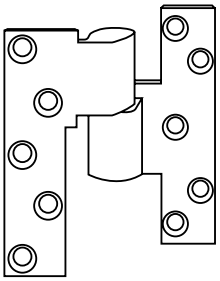

## 119 INTERMEDIATE PIVOT

| Model | Description |
|---|---|
| 107014-* | Metal Screws for One Leaf |
| 107114-* | Wood Screws for One Leaf |
| | Torx® Available - Suffix "T" |

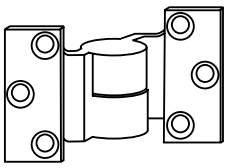

*specify finish



Copyright © 2001-2016, Yale Security Inc., an ASSA ABLOY Group company. All rights reserved.
Reproduction in whole or in part without the express written permission of Yale Security Inc. is prohibited.

| HW-019 | HW-020 |
|---|---|
| Revision Date: | Revision Date: |

## ANGLE PIVOT-3

| Model | Description |
|---|---|
| 107047* | Includes Screws and Stud |
| 30243 | Door Portion |
| 30814** | Frame Portion (handed) |

Torx® not available.

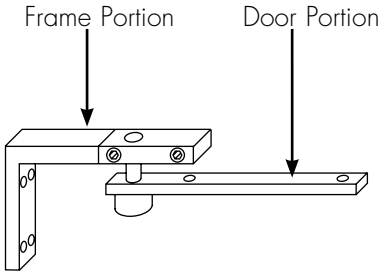


## TOP PIVOT 340 X 102 OR 320 X 102

| Model | Description |
|---|---|
| 10210 AS | Jamb Portion |
| 3065 | Door Portion |
| 640-ASY | Door Portion (320 x 102) |
| 107012* | Jamb Portion Screw Kit |
| 107329 | Door Potion Screw Kit |

Torx® not available.

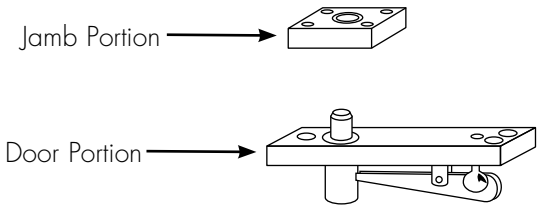


## F519 POCKET PIVOT

| Model | Description |
|---|---|
| 619005-* | Screw Kit |
| | Torx® Available |

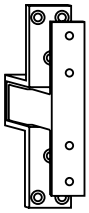

*specify finish


Copyright © 2001-2016, Yale Security Inc., an ASSA ABLOY Group company. All rights reserved.
Reproduction in whole or in part without the express written permission of Yale Security Inc. is prohibited.

## 117-1/4 PIVOT SET

| HW-019 | HW-020 |
|---|---|
| Revision Date: | Revision Date: |

Right Hand Shown
3/4" Offset Only

| |
|---|
| (A) Pivot Stud<br>181770-ASY |
| (B) Hex Cap<br>181778-* |
| (D) Arm Cap and Screw<br>12029-*AS |
| (E) Arm LH<br>11706LASY |
| (E) Arm RH<br>11705RASY |
| (F) Floor Portion Assy RH<br>17406R*AS |
| (F) Floor Portion Assy LH<br>17406L*AS |

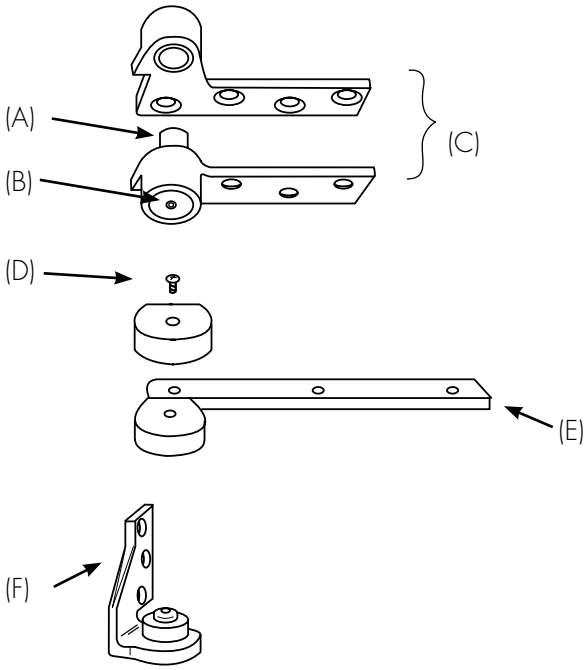


| |
|---|
| (C) 180 Top Pivot |

| Screw Kits |
|---|
| 180 Screw Kit<br>107014 - * Machine ( 2 req.)<br>107114 - * Wood (2 req.) |
| 117-1/4 Screw Kit<br>117127 - * |

## 117, F117 PIVOT SET

Right Hand Shown
3/4" and 1-1/2" Offset

| |
|---|
| (A) Pivot Stud<br>181770-ASY |
| (B) Hex Cap<br>181778-* |
| (D) Arm Cap and Screw<br>12029-*AS |
| (E) 3/4" Offset Arm LH<br>11706LASY |
| (E) 3/4" Offset Arm RH<br>11705RASY |
| (F) 117 Floor Portion Assy<br>17526-*AS<br>(F117 Floor Portion Assy<br>17559-*AS |

*specify finish

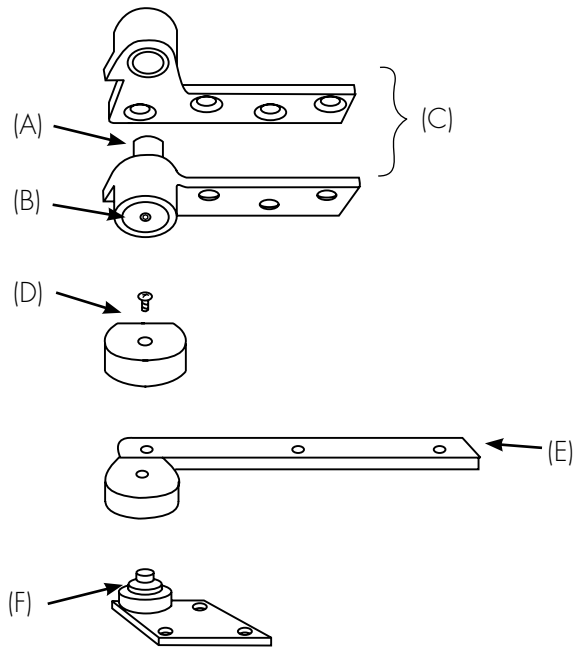


| |
|---|
| (C) 3/4" Offset Top Pivot Assembly<br>180 (standard)<br>F180 (Fire Rated)<br>180-20 (20 minutes) |

| 117 x 1-1/2 OS |
|---|
| (E) 1-1/2" Offset Arm LH<br>11706L15* |
| (E) 1-1/2" Offset Arm RH<br>11705R15* |

| Screw Kits |
|---|
| 180 Screw Kit<br>107014 - * Machine (2 req.)<br>107114 - * Wood (2 req.) |
| Bottom Pivot Screw Kit<br>117127 - * |



Copyright © 2001-2016, Yale Security Inc., an ASSA ABLOY Group company. All rights reserved.
Reproduction in whole or in part without the express written permission of Yale Security Inc. is prohibited.

## 147, F147 PIVOT SET

| HW-019 | HW-020 |
|---|---|
| Revision Date: | Revision Date: |

Right Hand Shown
3/4" and 1-1/2" Offset

| |
|---|
| (A) Pivot Stud<br>181770-ASY |
| (B) Hex Cap<br>181778-* |
| (D) Arm Cap & Screw<br>012142R*AS<br>(RH, BRS)<br>012142L*AS<br>(LH, BRS)<br>012144R*AS<br>(RH, SS)<br>012144L*AS<br>(LH, SS) |
| (E) Arm x Locking Screw<br>3/4" Offset 275177 RH<br>3/4" Offset 275176 LH |
| (F) Arm Lock Screw Pkg (5 per)<br>88905-PKG |
| (G) Arm Shims (2 per)<br>107071 |
| (H) Spindle Stud 14714 |
| (I) 147/F147 Floor Portion x Bearing 14721-*AS |

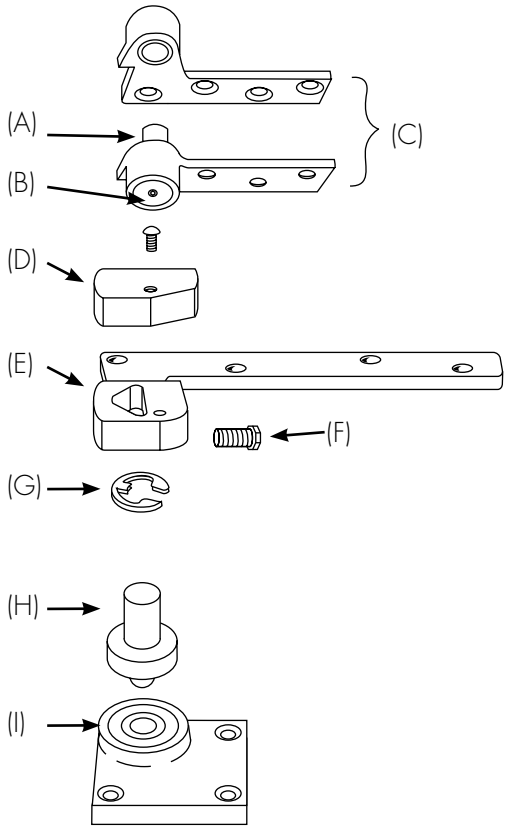


| |
|---|
| (C) 3/4" Offset Top Pivot Assembly<br>180 (standard)<br>F180 (Fire Rated)<br>180-20 (20 minutes) |

| 147 & F147 1-1/2 OS |
|---|
| (E) Arm x Locking Screw<br>1-1/2" Offset 275167-* |

| Screw Kits |
|---|
| 180/F180 Screw Kit<br>107014 - * Machine (2 req.)<br>107114 - * Wood (2 req.) |
| Arm Screw Kit<br>107044 Machine<br>107144 Wood |
| 147/F147 Bottom Pivot Screw Kit (includes "E" ring shims)<br>107062-* |

*specify finish


Copyright © 2001-2016, Yale Security Inc., an ASSA ABLOY Group company. All rights reserved.
Reproduction in whole or in part without the express written permission of Yale Security Inc. is prohibited.

## L147, FL147 PIVOT SET

| HW-019 | HW-020 |
|---|---|
| Revision Date: | Revision Date: |

Right Hand Shown
3/4" Offset Only

| |
|---|
| (A) Pivot Stud<br>181770-ASY |
| (B) Hex Cap<br>181778-* |
| (D) Arm Cap & Screw<br>012142R*AS (RH, BRS)<br>012142L*AS (LH, BRS)<br>012144R*AS (RH, SS)<br>012144L*AS (LH, SS) |
| (E) Arm x Locking Screw<br>1-3/4" Door 18550-Asy RH<br>18650-Asy LH |
| (E) Arm x Locking Screw<br>2" Door 18551-Asy RH<br>18651-Asy LH |
| (E) Arm x Locking Screw<br>2-1/4" Door 18552-Asy RH<br>18652-Asy LH |
| (E) Arm x Locking Screw<br>2-1/2" Door 18553-Asy RH<br>18653-Asy LH |
| (E) Arm x Locking Screw<br>3" Door 18554-Asy RH<br>18654-Asy LH |
| (F) Arm Lock Screw Pkg (5 per)<br>88905-PKG |

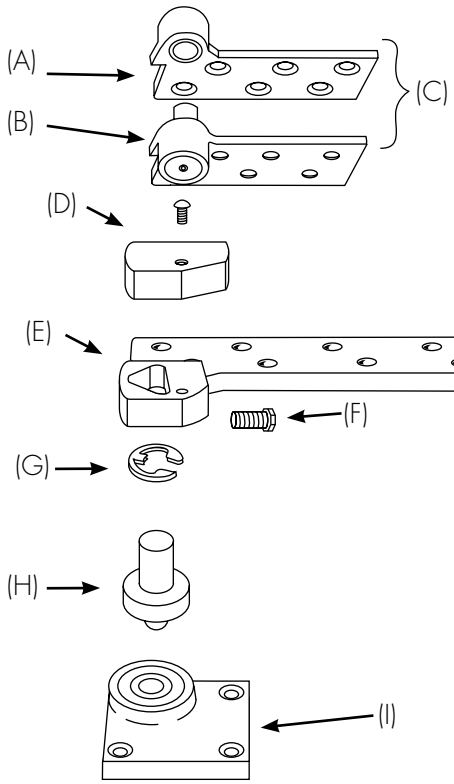


| |
|---|
| (C) 3/4" Offset Top Pivot Assembly<br>L180 (standard)<br>FL180 (Fire Rated)<br>L180-20 (20 minutes) |

| |
|---|
| (G) Arm Shims (2 per)<br>107071 |
| (H) Spindle Stud<br>14714 |
| (I) L147 Floor Portion x Bearing<br>14721-*AS |

| Screw Kits |
|---|
| 180/F180 Screw Kit<br>107016 - * Machine ( 2 req.)<br>107116 - * Wood (2 req.) |
| Arm Screw Kit<br>107048 Machine (2 req.)<br>107144 Wood (2 req.) |
| L147/F147 Bottom Pivot Screw Kit<br>(includes "E" ring shim)<br>107062-* |

Special Note: FL147 is available for 1-3/4" doors only

## 547/F547 PIVOT SET

Right Hand Shown
3/4" Offset Only

| |
|---|
| (B) Arm Cap & Screw<br>012142R*AS<br>(RH, BRS)<br>012142L*AS<br>(LH, BRS)<br>012144R*AS<br>(RH, SS)<br>012144L*AS<br>(LH, SS) |
| (C) Arm x Locking Screw<br>275177RH<br>275176LH |
| (D) Arm x Locking Screw<br>Pkg (5 per)<br>88905-Pkg |
| (E) Arm Shim Kit (2 per)<br>107071 |
| (F) Spindle Stud 14714 |
| (G) 147 Floor Portion x Bearing<br>14721-*AS |

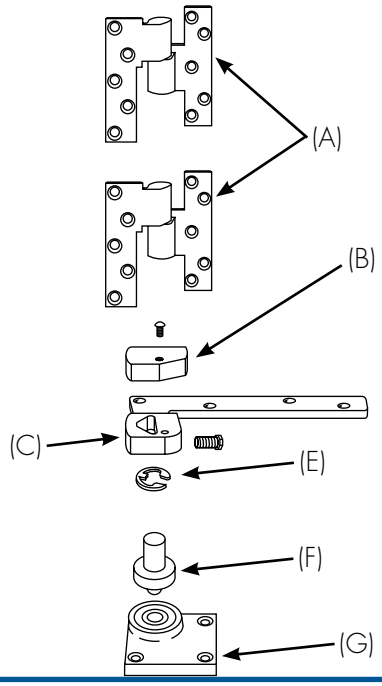


| |
|---|
| (A) M190 Intermediate Pivot<br>(For Fire-Rated<br>Doors order FM190) |

| |
|---|
| L147/F147 Bottom Pivot Screw Kit<br>(includes "E" ring shim)<br>107062-* |

*specify finish



Copyright © 2001-2016, Yale Security Inc., an ASSA ABLOY Group company. All rights reserved.
Reproduction in whole or in part without the express written permission of Yale Security Inc. is prohibited.

| HW-019 | HW-020 |
|---|---|
| Revision Date: | Revision Date: |

## 195 PIVOT SET

Right Hand Shown
3/4" Offset Only

| |
|---|
| (A) Pivot Stud<br>181770-ASY |
| (B) Hex Cap<br>181778-* |
| (D) Door Portion Asy RH<br>19503-*AS |
| (D) Door Portion Asy LH<br>19504-*AS |
| (E) Cap<br>19511-* |
| (F) Jamb Portion Asy RH<br>(Includes Stud)<br>19501-*AS |
| (F) Jamb Portion Asy LH<br>(Includes Stud)<br>19502-*AS |

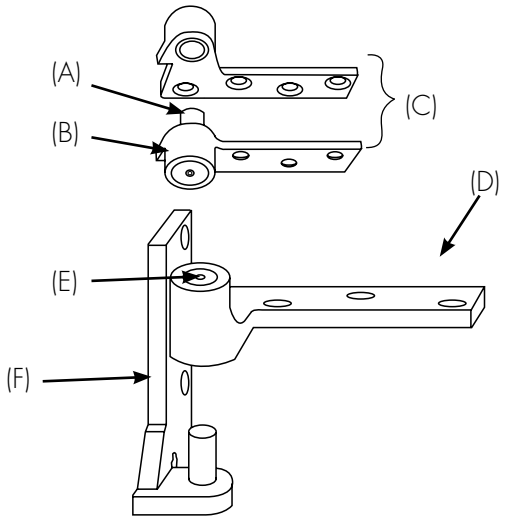


(C) 3/4" Offset Top Pivot Assembly
180 (standard)
F180 (Fire Rated)

| Screw Kits |
|---|
| 180 Screw Kit<br>107014 - * Machine (2 req.)<br>107114 - * Wood (2 req.) |
| 195 Screw Kit<br>107014 - * Machine (2 req.)<br>107114 - * Wood (2 req.) |

## 173 PIVOT SET

| |
|---|
| (A) Pivot Stud<br>181770-ASY |
| (B) Hex Cap<br>181778-* |
| (D) Arm Cap and Screw<br>12029-*AS |
| (E) Arm LH<br>11706L*AS<br>(E) Arm RH<br>11705R*AS |
| (F) Spindle Stud<br>173003 |
| (G) Spindle Collar<br>173001 |
| (H) Mounting Bolt<br>173002 |
| (J) Floor Anchor<br>173010 |

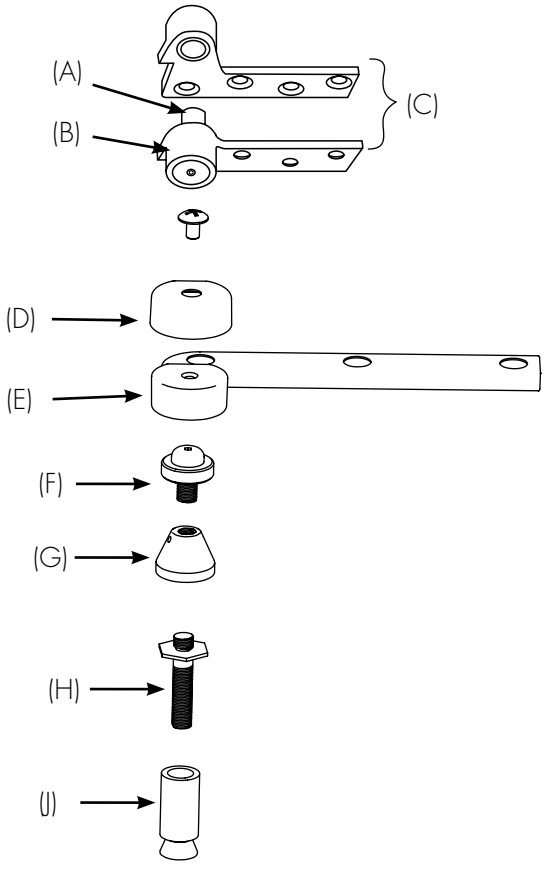


(C)180 Top Pivot

| Screw Kits |
|---|
| 180 Screw Kit<br>107014 - * Machine (2 req.)<br>107114 - * Wood (2 req.) |
| Bottom Arm Screw Kit<br>173176 Wood and Machine |

| 173 x 1-1/2OS |
|---|
| (E) 1-1/2" offset arm LH<br>11706L15*<br>(E) 1-1/2" offset arm RH<br>11705R15* |

*specify finish



Copyright © 2001-2016, Yale Security Inc., an ASSA ABLOY Group company. All rights reserved.
Reproduction in whole or in part without the express written permission of Yale Security Inc. is prohibited.

RIXSON
ASSA ABLOY

## 117-1/2, F117-1/2 PIVOT SET

| HW-019 | HW-020 |
|---|---|
| Revision Date: | Revision Date: |

Right Hand Shown
3/4" and 1-1/2" Offset

| |
|---|
| (A) Pivot Stud<br>181770-ASY |
| (B) Hex Cap<br>181778-* |
| (D) Arm Cap & Screw<br>012142R*AS (RH, BRS)<br>012142L*AS (LH, BRS)<br>012144R*AS (RH, SS)<br>012144L*AS (LH, SS) |
| (E) Arm x Locking Screw<br>3/4" Offset 275177 RH<br>3/4" Offset 275176 LH |
| (F) Arm Lock Screw Pkg (5 per)<br>88905-PKG |
| (G) Arm Shim Kit (5 per)<br>275065-PKG |
| (H) Spindle Shoulder Collar<br>16301* |
| (I) Floor Plate x Screws<br>1174050-* |
| (J) 117-1/2 & F117-1/2 Floor Portion Assembly<br>X01176350 |

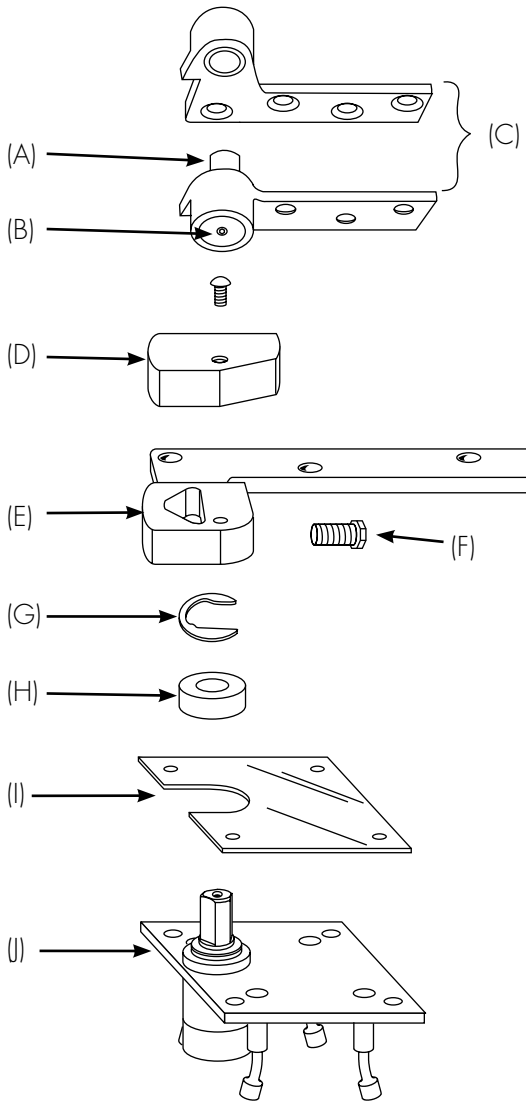


| |
|---|
| (C) 3/4" Offset Top Pivot Assembly<br>180 (standard)<br>F180 (Fire Rated)<br>180-20 (20 minutes) |

| |
|---|
| 1-1/2" Offset Arm<br>275167-* |

| Screw Kits |
|---|
| 180/F180 Screw Kit<br>107014 - * Machine (2 req.)<br>107114 - * Wood (2 req.) |
| Floor Plate Screw Kit<br>107004-* |
| Arm Screw Kit<br>107044 - * Machine<br>107144 - * Wood |

*specify finish



Copyright © 2001-2016, Yale Security Inc., an ASSA ABLOY Group company. All rights reserved.
Reproduction in whole or in part without the express written permission of Yale Security Inc. is prohibited.

## L117, FL117 PIVOT SET

| HW-019 | HW-020 |
|---|---|
| Revision Date: | Revision Date: |

Right Hand Shown
3/4" Offset Only

| |
|---|
| (A) Pivot Stud<br>181770-ASY |
| (B) Hex Cap<br>181778-* |
| (D) Arm Cap & Screw<br>012142R*AS (RH, BRS)<br>012142L*AS (LH, BRS)<br>012144R*AS (RH, SS)<br>012144L*AS (LH, SS) |
| (E) Arm x Locking Screw<br>1-3/4" Door 18550-ASY RH<br>18650-ASY LH |
| (E) Arm x Locking Screw<br>2" Door 18551-ASY RH<br>18651-ASY LH |
| (E) Arm x Locking Screw<br>2-1/4" Door 18552-ASY RH<br>18652-ASY LH |
| (E) Arm x Locking Screw<br>2-1/2" Door 18553-ASY RH<br>18653-ASY LH |
| (E) Arm x Locking Screw<br>3" Door 18554-ASY RH<br>18654-ASY LH |
| (F) Arm Lock Screw Pkg (5 per)<br>88905-PKG |
| (G) Arm Shim Kit (5 per)<br>275065-PKG |
| (H) Spindle Shoulder Collar<br>259500-* |
| (I) Heavy-Duty Thrust-Bearing<br>41204-PKG |
| (J) Floor Plate x Screws<br>1174050-* |
| (K) Floor Portion Assembly<br>X01176351<br>Includes 41204-PKG |

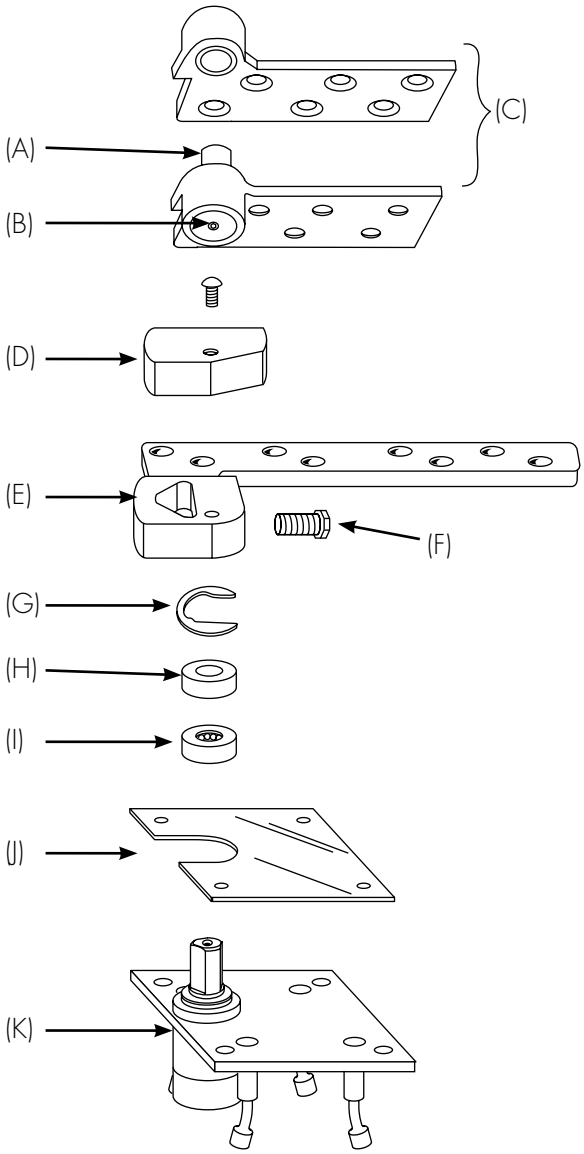


| |
|---|
| (C) 3/4" Offset Top Pivot Assembly<br>L180 (standard)<br>FL180 (Fire Rated)<br>L180-20 (20 minutes) |

Note: FL is available for 1-3/4" doors only

| Screw Kits |
|---|
| L180/FL180 Screw Kit<br>107016 - * Machine ( 2 req.)<br>107116 - * Wood (2 req.) |
| Arm Screw Kit<br>107048 - * Machine ( 2 req.)<br>107114 - * Wood (2 req.) |
| Floor Plate Screw Kit<br>107004 - * Machine ( 2 req.) |

Special Note: FL117 is available for 1-3/4" doors only

*specify finish


Copyright © 2001-2016, Yale Security Inc., an ASSA ABLOY Group company. All rights reserved.
Reproduction in whole or in part without the express written permission of Yale Security Inc. is prohibited.

## 127-3/4 & 128-3/4 PIVOT SETS

| HW-019 | HW-020 |
|---|---|
| Revision Date: | Revision Date: |

| |
|---|
| (A) Top Pivot Jamb Portion 640-ASY |
| (B) Top Pivot Plate x Screws 12724-*PK(SS) 12720-*PK (BRS) |
| (C) Top Pivot Door Portion 12716 |
| (E) Jamb Portion & Stud Assembly 127-3/4 Only 12711-* |
| (F) Arm & Bearing Assembly 12714 Door Portion |
| (G) Floor Pivot & Stud Assembly 128-3/4 Only 71521-*AS |

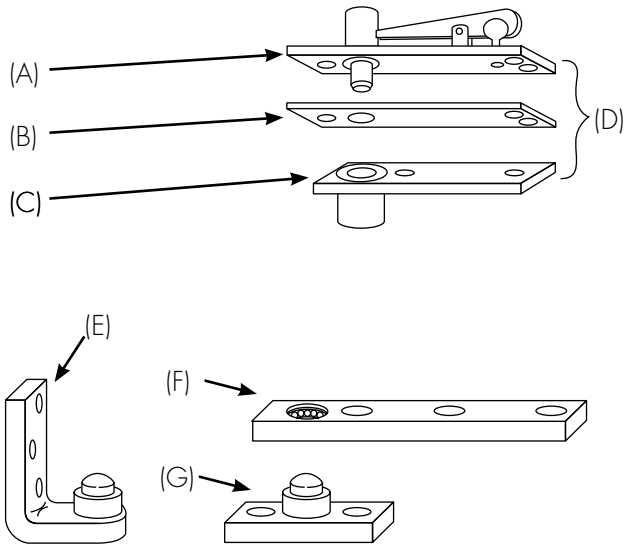


(D) 320 Top Pivot

| Screw Kits |
|---|
| 320 Screw Kit 107340 Machine & Wood |
| 127-3/4 & 128-3/4 Screw Kit 117127-* |

*specify finish

## 370 PIVOT SET

| |
|---|
| (A) Top Pivot Jamb Portion 3065 |
| (B) Finish Plate x Screws 012202-*PK (BRS) 012204-*PK (SS) |
| (C) Top Pivot Door Portion 30243 |
| (E) Arm 22131 |
| (G) Floor Portion and Stud 22121-* |

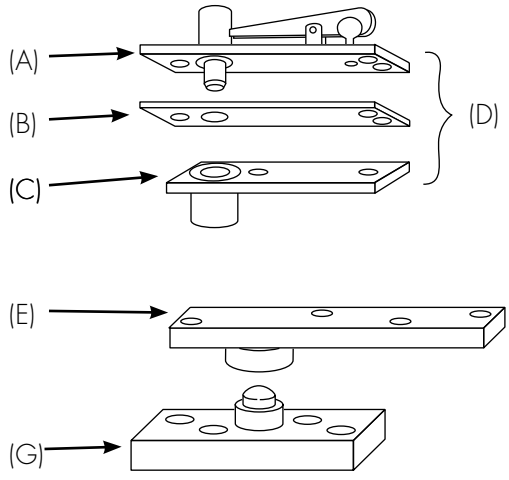


(D) 340 Top Pivot

| Screw Kits |
|---|
| 340 Top Pivot Screw Kit 107329 Machine & Wood |
| 370 Floor Portion 107370-* |

*specify finish


Copyright © 2001-2016, Yale Security Inc., an ASSA ABLOY Group company. All rights reserved.
Reproduction in whole or in part without the express written permission of Yale Security Inc. is prohibited.

## 117-3/4 PIVOT SET

| HW-019 | HW-020 |
|---|---|
| Revision Date: | Revision Date: |

| |
|---|
| (A) Top Pivot Jamb Portion 3065 |
| (B) Top Pivot Finish Plate 012202-*PK(BRS) 012204-*PK(SS) |
| (C) Top Pivot Door Portion 30243 |
| (E) Arm 185.75 |
| (F) Spindle Shoulder Collar 16301* |
| (G) Floor Plate x Screws 1174020-* |
| (H) Floor Portion Assembly X01176320 |

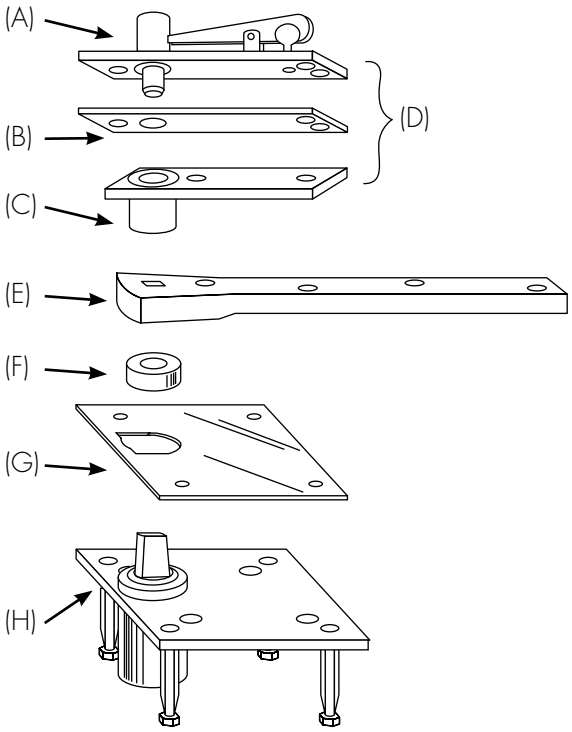


(D) 340 Top Pivot

| Screw Kits |
|---|
| 340 Top Pivot Screw Kit 107329 Machine & Wood |
| Floor Plate Screws 107004-* Machine and wood |
| Arm Screw Kit 107064 |

(D) Top Pivot 340

## H117-3/4 PIVOT SET

| |
|---|
| (A) Top Pivot Jamb Portion 308548 |
| (B) Top Pivot Finish Plate 012202-*PK(BRS) 012204-*PK(SS) |
| (C) Top Pivot Door Portion 30141 |
| (E) Standard End Load Arm Package 262022 |
| (F) Spindle Shoulder Collar 259500-* |
| (G) Heavy-Duty Thrust Bearing 41204-PKG |
| (I) Floor Plate x Screws 1174020-* |
| (J) Floor Portion Assembly X01176322 Includes 41204-PKG |

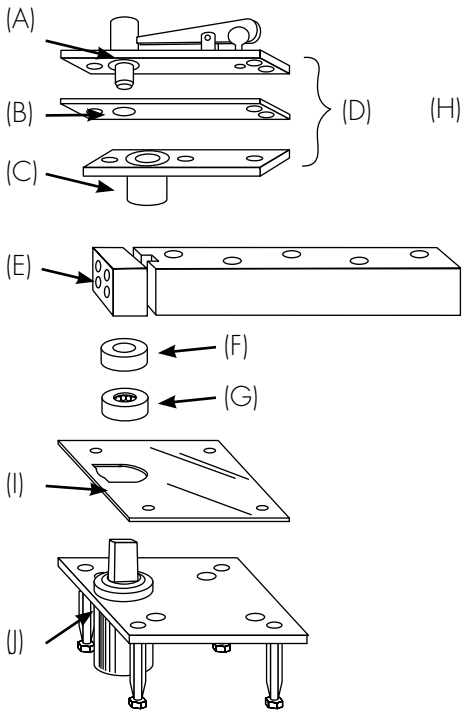


(D) 340 Top Pivot

(H) 587 Side Load Arm Package 262587

| Screw Kits |
|---|
| H340 Screw Kit 107329 Machine & Wood |
| Arm Screw Kit 107045 - Machine 107145 - Wood |
| 587 Arm Screw Kit 107077 Machine 107177 Wood |
| Arm Shim Screw Kit 107060 |
| Floor Plate Screw Kit 107004-* |

*specify finish


Copyright © 2001-2016, Yale Security Inc., an ASSA ABLOY Group company. All rights reserved.
Reproduction in whole or in part without the express written permission of Yale Security Inc. is prohibited.

| HW-019 | HW-020 |
|---|---|
| Revision Date: | Revision Date: |

## 178 PIVOT SETS

| |
|---|
| (A) Top Jamb Portion 42801 |
| (B) Finish Plate 012202-*PK (BRS) 012204-*PK (SS) |
| (C) Patch Fitting 7495-* |

| |
|---|
| Top Pivot Screw Kit 107329 |

*specify finish

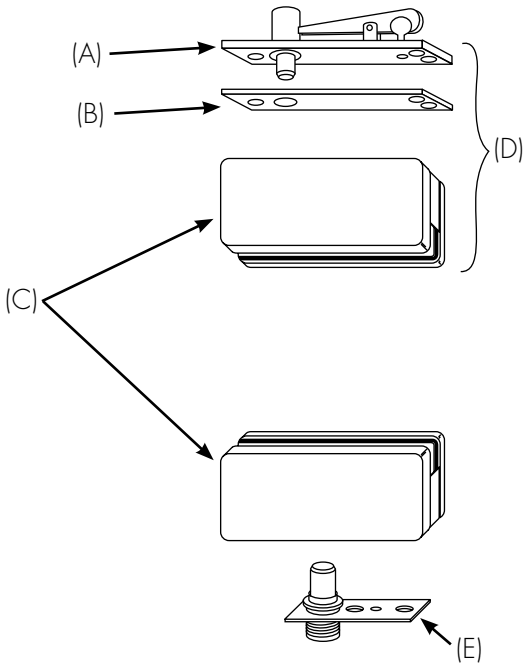


| |
|---|
| (D) Top Patch 7494-* PK |
| (E) Bottom Pivot Floor Portion 74104 |

## 176 PIVOT SETS

| |
|---|
| (A) Top Pivot Jamb Portion 640-ASY |
| (B) Top Pivot Plate x Screws 12724-*PK(SS) 12720-*PK (BRG) |
| (C) Top Pivot Door Portion 12716 |
| (E) Bottom Arm 12704 |
| (F) Sleeve 176001 |
| (G) Mounting Bolt 176002 |
| (H) Floor Anchor 173010 |

*specify finish

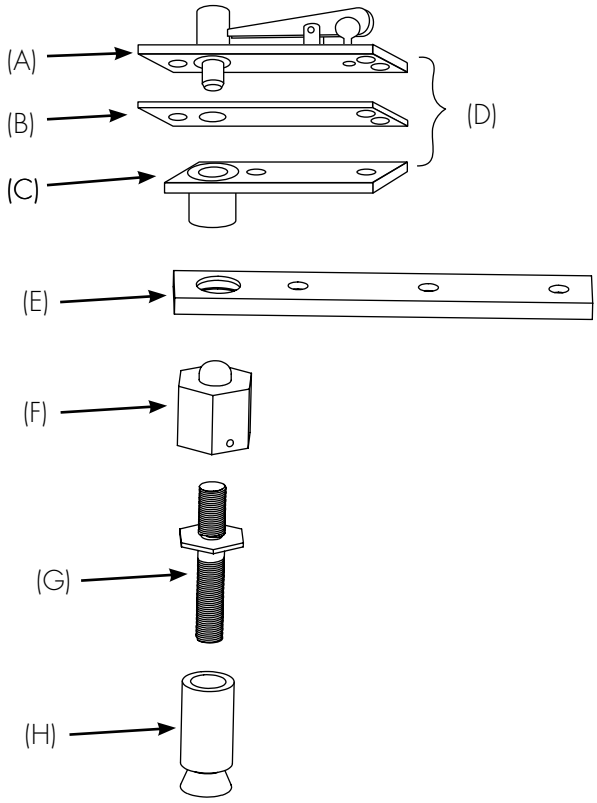


| Screw Kits |
|---|
| 320 Screw Kit 107340 Machine and Wood |
| Bottom Arm Screw Kit 173176 Machine and Wood |



Copyright © 2001-2016, Yale Security Inc., an ASSA ABLOY Group company. All rights reserved.
Reproduction in whole or in part without the express written permission of Yale Security Inc. is prohibited.

**HW-021**

Revision Date:

# Overhead Concealed Closers

RIXSON

ASSA ABLOY

ASSA ABLOY, the global leader in door opening solutions

Rixson Overhead Concealed closers offer an aesthetically appealing way to close a door. In situations where a closer is needed but concealment is required, Rixson offers several different series to meet your application demands. Concealed for minimal appearance, these offset hung or center hung (single or double acting) door closers provide control without sacrificing the aesthetics of the opening.

*Model 91 Shown*

| Series | Architecutral Grade | Commodity Grade | Single Acting | Double Acting | Handed | ADA Compliant Model Available | Grade 1 Certified | Door Weight |
|---|---|---|---|---|---|---|---|---|
| 90 | • | | • | | • | • | • | 250 lbs |
| 700 | • | | • | | • | | | 200 lbs |
| 800 | • | | | • | | | | 200 lbs |
| 0608 | | • | • | | | | | 200 lbs |
| 608 | | • | • | • | | | | 200 lbs |

## TABLE OF CONTENTS

General Information ..... 3
Specifications ..... 3
90 Series ..... 4-5
90 Parts List ..... 6-7
700/800 Series ..... 8-11
700/800 Parts List ..... 12-15
0608 Series ..... 16-17
0608 Parts List ..... 18-19
608 Series ..... 20-21
608 Parts List ..... 22-25



Copyright © 2001-2015, Yale Security Inc., an ASSA ABLOY Group company. All rights reserved.
Reproduction in whole or in part without the express written permission of Yale Security Inc. is prohibited.

## GENERAL INFORMATION

Non-Hold Open closers do not hold the door open. This feature cannot be changed in the field on the 608, 700, or 800 series closers.

Hold Open closers hold the door open. This feature cannot be changed in the field on the 608, 700, or 800 series closers.

The degree of swing must be specified on some closers (refer to specific product pages for requirements).

When the door closer must be concealed above the ceiling or drywall, a longer or extended spindle is required. Extended spindles are available 1/2" longer than standard. Closer adjustment valves must always be accessible.

End caps are used to cover the mortise edges for wood doors on center hung 608 and 700/800 models. Two 199 End Caps can be furnished; one for the top arm and one for the bottom pivot.

Mounting brackets or boxes for aluminum, wood or metal frames must be specified when ordering the 608 and 700/800 series.

800 Series Shown

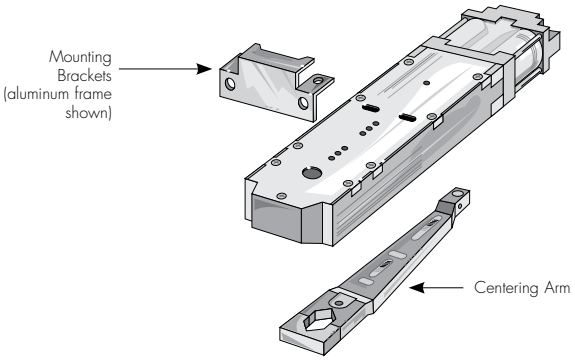


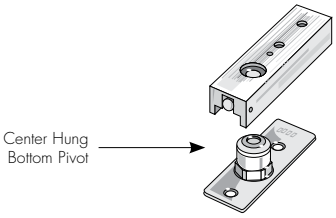


## SPECIFICATIONS

**Model 91:**
Model 91 shall be used for offset hung doors. Closer shall fit in a 1-3/4 x 4 aluminum tube. Closer shall have adjustable spring that complies to accessibility codes. Adjustable spring, backcheck, and closing speed valves must be accessible after door is installed. Where applicable, a hold open feature is achieved in the track. Closer shall be Grade 1 per ANSI A156.4. Closer shall be fire rated UL10C for doors tested for overhead concealed products up to 3 hours.

**Models 700/800**
Model 700 for single acting center hung doors. Hydraulic closer mechanism to fit in minimum 1-3/4" x 4" aluminum frame. Closer shall have a sized spring determined by the door width. Adjustable hydraulic backcheck and closing speed valves. Closers for single acting doors shall be handed and preloaded for positive closing action. Vertically adjustable center hung bottom pivot included. For double acting doors, use model 800 with adjustable closing speed for each swing direction. Hold open (option) is achieved through the closer body and degree called out.

**Model 608**
Compact cast iron body to fit in minimum 1-3/4 x 4" aluminum frame. Closer shall have separate and independent closing and latch speed control valves. Optional hold open at 90 or 105°. For center hung applications, arm shall have door centering adjustments and be directly connected to the closer spindle. Closer body is non-handed, single or double acting. Vertically adjustable center hung bottom pivot included. For independently hung doors use model 0608 with slide track arm and channel.


Copyright © 2001-2015, Yale Security Inc., an ASSA ABLOY Group company. All rights reserved.
Reproduction in whole or in part without the express written permission of Yale Security Inc. is prohibited.

## MODEL 91

### How to Order

| WPH<br>Prefix | 91<br>Model | N<br>Function | Options | RH<br>Hand | x 626<br>Finish |
|---|---|---|---|---|---|

**PH** - 1-3 Spring
**W** - Wood Frame

**N** - Non-Hold Open
**H** - Hold Open

1/2" extended spindle

**RH** - Right Hand
**LH** - Left Hand

| | |
|---|---|
| 689 | Spayed Aluminum |
| 690 | Sprayed Dark Bronze |
| 691 | Sprayed Light Bronze |
| 693 | Sprayed Black |
| 696 | Sprayed Brass |
| 605 | Bright Brass |
| 606 | Satin Brass |
| 612 | Satin Bronze |
| 613 | Dark Bronze |
| 613E | Dark Oxidized Satin Bronze - equivalent |
| 618 | Bright Nickel |
| 619 | Satin Nickel |
| 625 | Bright Chrome |
| 626 | Satin Chrome |


Copyright © 2001-2015, Yale Security Inc., an ASSA ABLOY Group company. All rights reserved.
Reproduction in whole or in part without the express written permission of Yale Security Inc. is prohibited.

MODEL 91

| Packages |
|---|
| Right Hand Arm Package<br>90237-***PKG (includes 90237, 90259 and 90253) |
| Left Hand Arm Package<br>90236-***PKG (includes 90236, 90259 and 90253) |
| Non-Hold Open Track Assembly<br>90255-ASY (includes 90255, 90242 and 90239) |
| Hold Open Track Assembly<br>90254-ASY (includes 90254, 90242 and 90239) |

| |
|---|
| (A) Closer Body (Specify hand, function, finish x LAP) |
| (B) Arm<br>90236-*** (LH)<br>90237-*** (RH) |
| (C) Track<br>90239 |

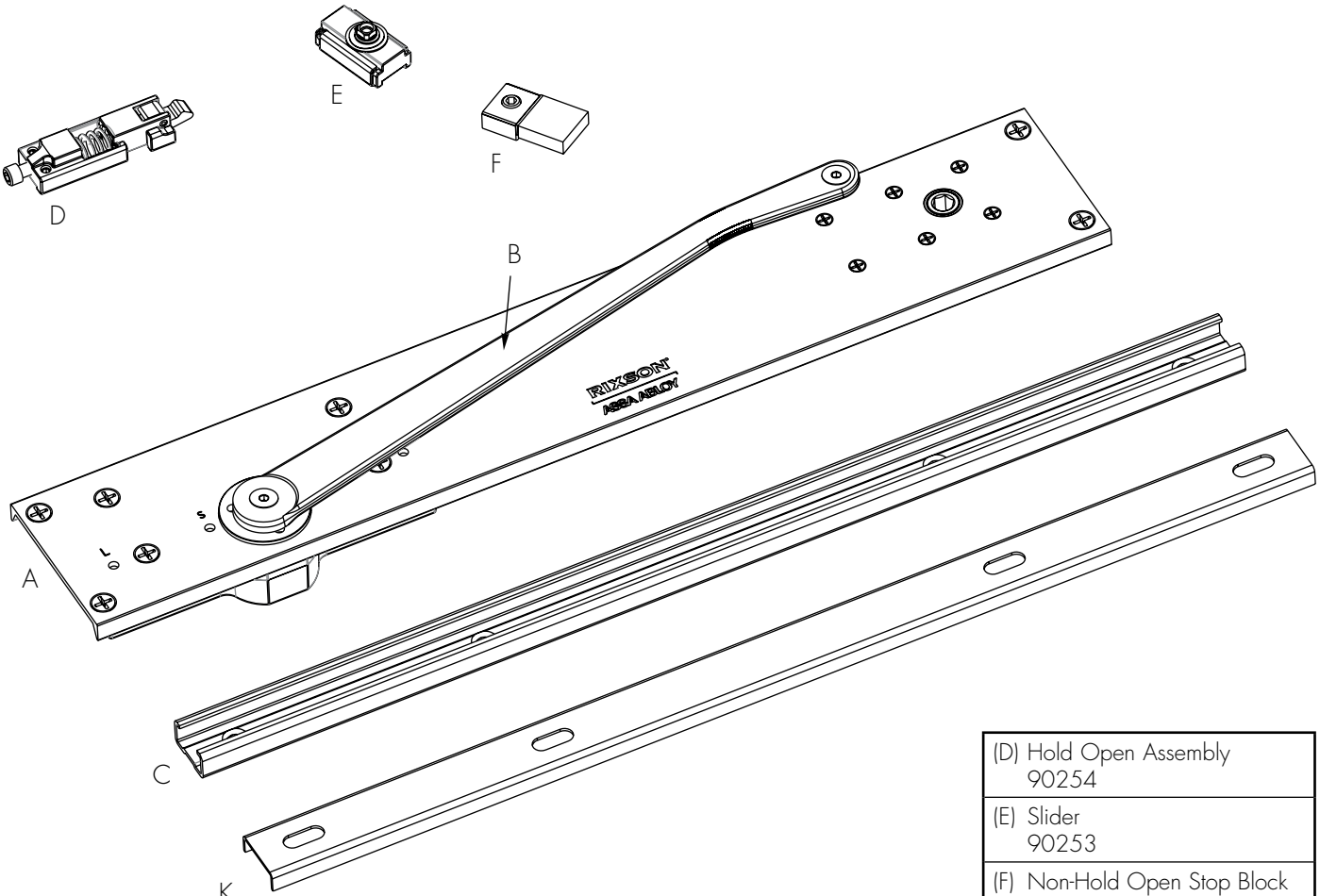


| |
|---|
| (D) Hold Open Assembly<br>90254 |
| (E) Slider<br>90253 |
| (F) Non-Hold Open Stop Block<br>90255 |
| (G) Arm Screw Kit<br>90259-*** |
| (H) Closer Screw Kit<br>90241-*** |
| (J) Track Screw Kit<br>90242 |
| (K) Retrofit Track Spacer and Screws (Consult Factory) |

Left hand shown
*specify finish


Copyright © 2001-2015, Yale Security Inc., an ASSA ABLOY Group company. All rights reserved.
Reproduction in whole or in part without the express written permission of Yale Security Inc. is prohibited.

### MODEL W91

| Packages |
|---|
| Right Hand Arm Package<br>90237-***PKG (includes 90237, 90259 and 90253) |
| Left Hand Arm Package<br>90236-***PKG (includes 90236, 90259 and 90253) |
| Non-Hold Open Track Assembly<br>90255-ASY (includes 90255, 90242 and 90239) |
| Hold Open Track Assembly<br>90254-ASY (includes 90254, 90242 and 90239) |

| |
|---|
| (A) Closer Body (Specify hand, function, finish x LAP) |
| (B) Arm<br>90236-*** (LH)<br>90237-*** (RH) |
| (C) Track<br>90239 |

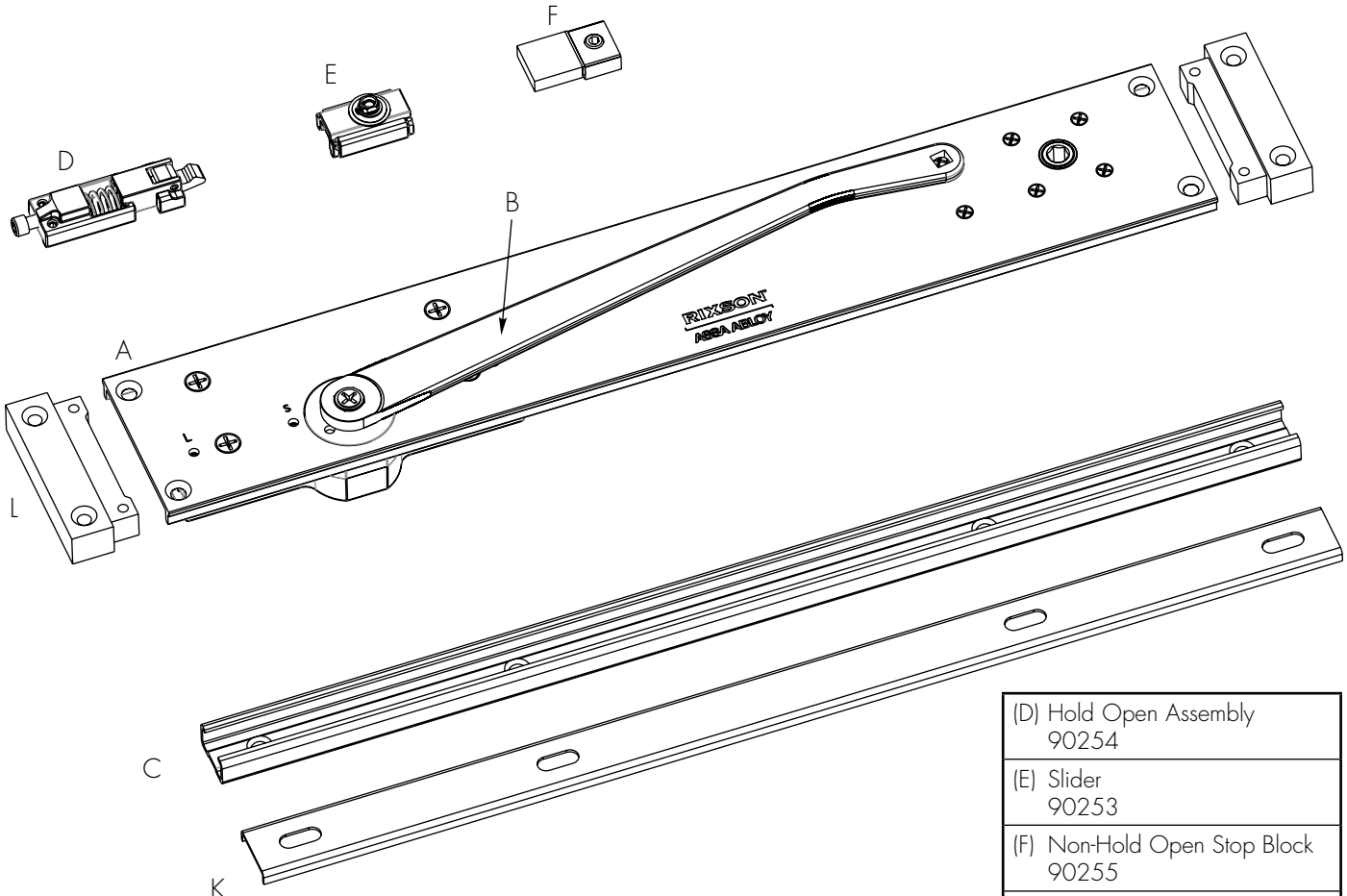


K
(Not for new installation. For replacement only.)

| |
|---|
| (D) Hold Open Assembly<br>90254 |
| (E) Slider<br>90253 |
| (F) Non-Hold Open Stop Block<br>90255 |
| (G) Arm Screw Kit<br>90259-*** |
| (H) Closer Screw Kit<br>90241-*** |
| (J) Track Screw Kit<br>90242 |
| (K) Retrofit Track Spacer and Screws (Consult Factory) |
| (L) Wood Frame Clip<br>90257-*** |

Left hand shown
*specify finish



Copyright © 2001-2015, Yale Security Inc., an ASSA ABLOY Group company. All rights reserved.
Reproduction in whole or in part without the express written permission of Yale Security Inc. is prohibited.

# OVERHEAD CONCEALED CLOSERS
## ARCHITECTURAL GRADE/SINGLE ACTING CENTER HUNG

MODEL 700

**HW-021**
Revision Date:

### Application
- Exterior or interior doors
- Door weight up to 200 lbs.

Closer shown with cover, furnished with W, M, MW models

### Features
- Single acting
- Handed
- Available non-hold open (N) or automatic hold open (A). Specify 90° or 105°, N or A
- Frame stop required. See Door Control Accessories, page 8 #60131. Order separately.
- Adjustable closing speed valve
- Adjustable hydraulic backcheck
- Includes 2183020 bottom pivot
- Product should always be used with auxiliary stop
- 2 year limited warranty

### Optional Features
- Extended spindle; 1/2" longer than standard closer spindle. Must be ordered as part of the closer; cannot be added later
- End cap 199 for top and bottom of wood door

### Compliance
- ANSI CO5052
- Compliant to ANSI A156.4 standards

### Models
- 700 should be used on aluminum doors and frames. Package includes closer body, arm, frame mounting clips 1639000 and bottom pivot 2183020. Frame size 1-3/4" x 4" minimum.
- M700 should be used on metal doors and frames. Package includes closer body, arm, cover plate, frame mounting channel 1929000* and bottom pivot 2183020. Frame size 2"x 5-1/2" minimum.
- MW700 should be used on wood doors and metal frames. Package includes closer body, arm, cover plate, frame mounting channel 1929000* and bottom pivot 2183020. Frame size 2"x 5-1/2" minimum.
- W700 should be used on wood doors and frames. Package includes closer body, arm, cover plate, frame mounting channel 1980910 and bottom pivot 2183020. Frame size 2"x 5-1/2" minimum.

### Technical Info

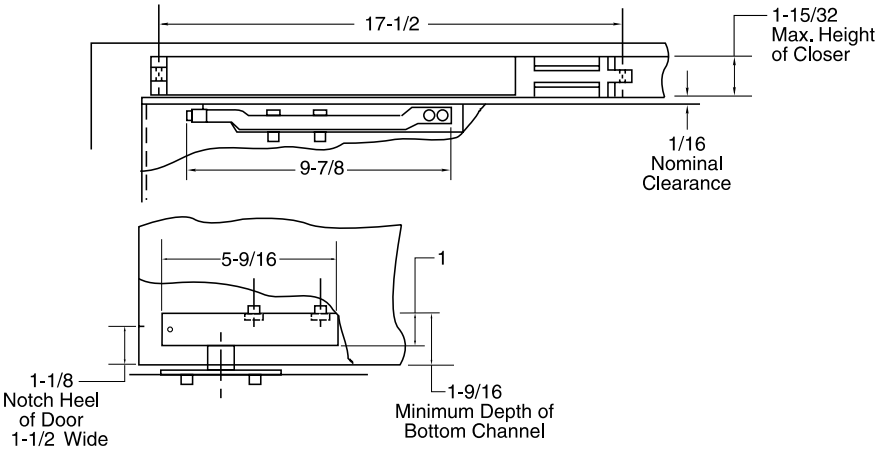


*Note that mounting channels must be welded into frames prior to shipment to job site.


Copyright © 2001-2015, Yale Security Inc., an ASSA ABLOY Group company. All rights reserved.
Reproduction in whole or in part without the express written permission of Yale Security Inc. is prohibited.

### MODEL 700

#### How to Order

| M70 Model | 6 Spring Size | 90A Hold Open | x 1/2" Ext Spdl Suffix | RH Hand | x 626 Finish |
|---|---|---|---|---|---|

**M70 Model**

**700** - Aluminum Door & Frames
**M700** - Metal Doors & Frames
**MW700** - Wood Doors & Metal Frames
**W700** - Wood Doors & Frames

**6 Spring Size**

6*
7*
8*

*See chart below for door widths

**90A Hold Open**

**90A** - Hold Open
**105A** - Hold Open
**90N** - Non-Hold Open
**105N** - Non-Hold Open

**x 1/2" Ext Spdl Suffix**

1/2" Extended Spindle

**RH Hand**

**RH** - Right Hand
**LH** - Left Hand

**x 626 Finish**

**All Arms Are**

| | |
|---|---|
| 689 | Sprayed Alum |
| 690 | Sprayed Dk Brz |
| 691 | Sprayed Lt Brz |
| 693 | Sprayed Black |
| 696 | Sprayed Brass |

**Cover Plates**

| | |
|---|---|
| 605 | Bright Brass |
| 606 | Satin Brass |
| 611 | Bright Bronze |
| 612 | Satin Bronze |
| 613 | Dark Bronze |
| 613E | Dark Oxidized Satin Bronze - Equivalent |
| 619 | Satin Nickel |
| 622 | Flat Black |
| 625 | Bright Chrome |
| 626 | Satin Chrome |

#### Sized Spring

| 706, M706, MW706, W706 | 707, M707, MW707, W707 | 708, M708, MW708, W708 |
|---|---|---|
| Exterior 2'6" x 8'0" (762 x 2438mm) | Exterior 3'0" x 8'0" (914 x 2438mm) | Exterior 3'6" x 8'0" (1067 x 2438mm) |
| Interior 3'0" x 8'0" (914 x 2438mm) | Interior 3'3" x 8'0" (991 x 2438mm) | Interior 3'8" x 8'0" (1118 x 2438mm) |



Copyright © 2001-2015, Yale Security Inc., an ASSA ABLOY Group company. All rights reserved.
Reproduction in whole or in part without the express written permission of Yale Security Inc. is prohibited.

# OVERHEAD CONCEALED CLOSERS
## ARCHITECTURAL GRADE/DOUBLE ACTING CENTER HUNG

**HW-021**
Revision Date:

MODEL 800

### Application
- Exterior or interior doors
- Door weight up to 200 lbs.

### Features
- Double acting
- Non-handed
- Available non-hold open (N) or automatic hold open (A). Specify 90° or 105°, N or A
- Adjustable closing speed valve
- Includes 2183020 bottom pivot
- Product should always be used with auxiliary floor or wall stop
- 2 year limited warranty

### Optional Features
- Extended spindle; 1/2" longer than standard closer spindle. Must be ordered as part of the closer; cannot be added later
- End cap 199 for top and bottom of wood door

### Compliance
- ANSI CO5052/CO5062
- Compliant to ANSI A156.4 standards

### Models
- 800 should be used on aluminum doors and frames. Package includes closer body, arm and frame mounting clips 1639000 and bottom pivot 2183020. Frame size 1-3/4" x 4".
- M800 should be used on metal doors and frames. Package includes closer body, arm, cover plate, frame mounting channel 1929000* and bottom pivot 2183020. Frame size 2" x 5-1/2".
- MW800 should be used on wood doors and metal frames. Package includes closer body, arm, cover plate, frame mounting channel 1929000* and bottom pivot 2183020. Frame size 2" x 5-1/2".
- W800 should be used on wood doors and frames. Package includes closer body, arm, cover plate, frame mounting channel 1980910, and bottom pivot 2183020. Frame size 2" x 5-1/2".

### Technical Information

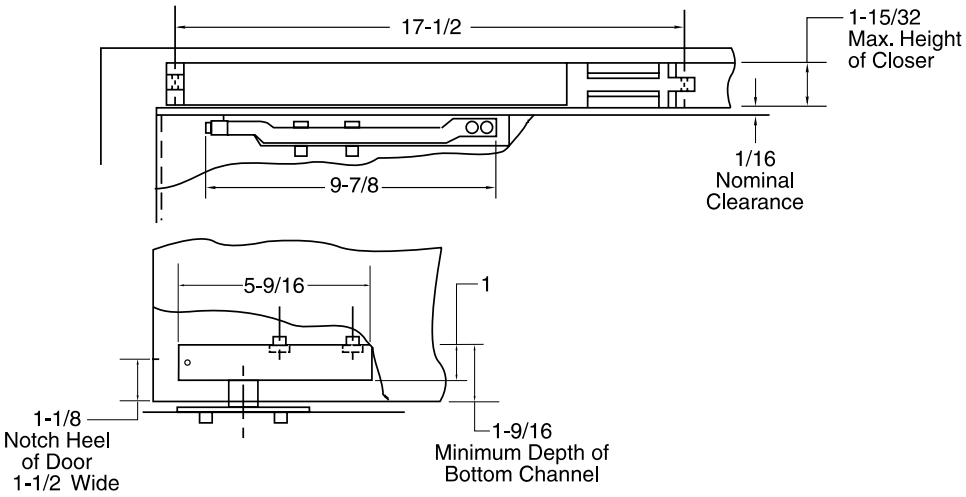


*Note that mounting channels must be welded into frames prior to shipment to job site.


Copyright © 2001-2015, Yale Security Inc., an ASSA ABLOY Group company. All rights reserved.
Reproduction in whole or in part without the express written permission of Yale Security Inc. is prohibited.

## MODEL 800

### How to Order

| M80 Model | 6 Spring Size | 90A Hold Open | x 1/2" Ext Spdl Suffix | x 626 Finish |
|---|---|---|---|---|

**800** - Closer for Aluminum Door and Frames
**M800** - Closer for Metal Doors and Frames
**MW800** - Closer for Wood Doors and Metal Frames
**W800** - Closer for Wood Doors and Frames

**6***
**7***
**8***

**90A** - Hold Open
**105A** - Hold Open
**90N** - Non-Hold Open
**105N** - Non-Hold Open

1/2" Extended Spindle

**All Arms Are**

| | |
|---|---|
| 689 | Sprayed Alum |
| 690 | Sprayed Dk Brz |
| 691 | Sprayed Lt Brz |
| 693 | Sprayed Black |
| 696 | Sprayed Brass |

**Cover Plates**

| | |
|---|---|
| 605 | Bright Brass |
| 606 | Satin Brass |
| 611 | Bright Bronze |
| 612 | Satin Bronze |
| 613 | Dark Bronze |
| 613E | Dark Oxidized Satin Bronze - Equivalent |
| 619 | Satin Nickel |
| 622 | Flat Black |
| 625 | Bright Chrome |
| 626 | Satin Chrome |

*See chart below for door widths

### Sized Springs

| 806, M806, MW806, W806 | 807, M807, MW807, W807 | 808, M808, MW808, W808 |
|---|---|---|
| Exterior 2'6" x 8'0" (762 x 2438mm) | Exterior 3'0" x 8'0" (914 x 2438mm) | Exterior 3'6" x 8'0" (1067 x 2438mm) |
| Interior 3'0" x 8'0" (914 x 2438mm) | Interior 3'3" x 8'0" (991 x 2438mm) | Interior 3'8" x 8'0" (1118 x 2438mm) |


Copyright © 2001-2015, Yale Security Inc., an ASSA ABLOY Group company. All rights reserved.
Reproduction in whole or in part without the express written permission of Yale Security Inc. is prohibited.

700/800

**HW-021**
Revision Date:

| |
|---|
| (D) Arm Block 808075-1 |
| (E) Arm Assembly 808175 |

| |
|---|
| (A) Attaching Bracket 1639000 |
| (B) Closer Body (Specify Complete Model No. x LAP) |
| (F) Arm Package 8002020 |
| (G) Bottom Pivot Package Includes H 2183020 |

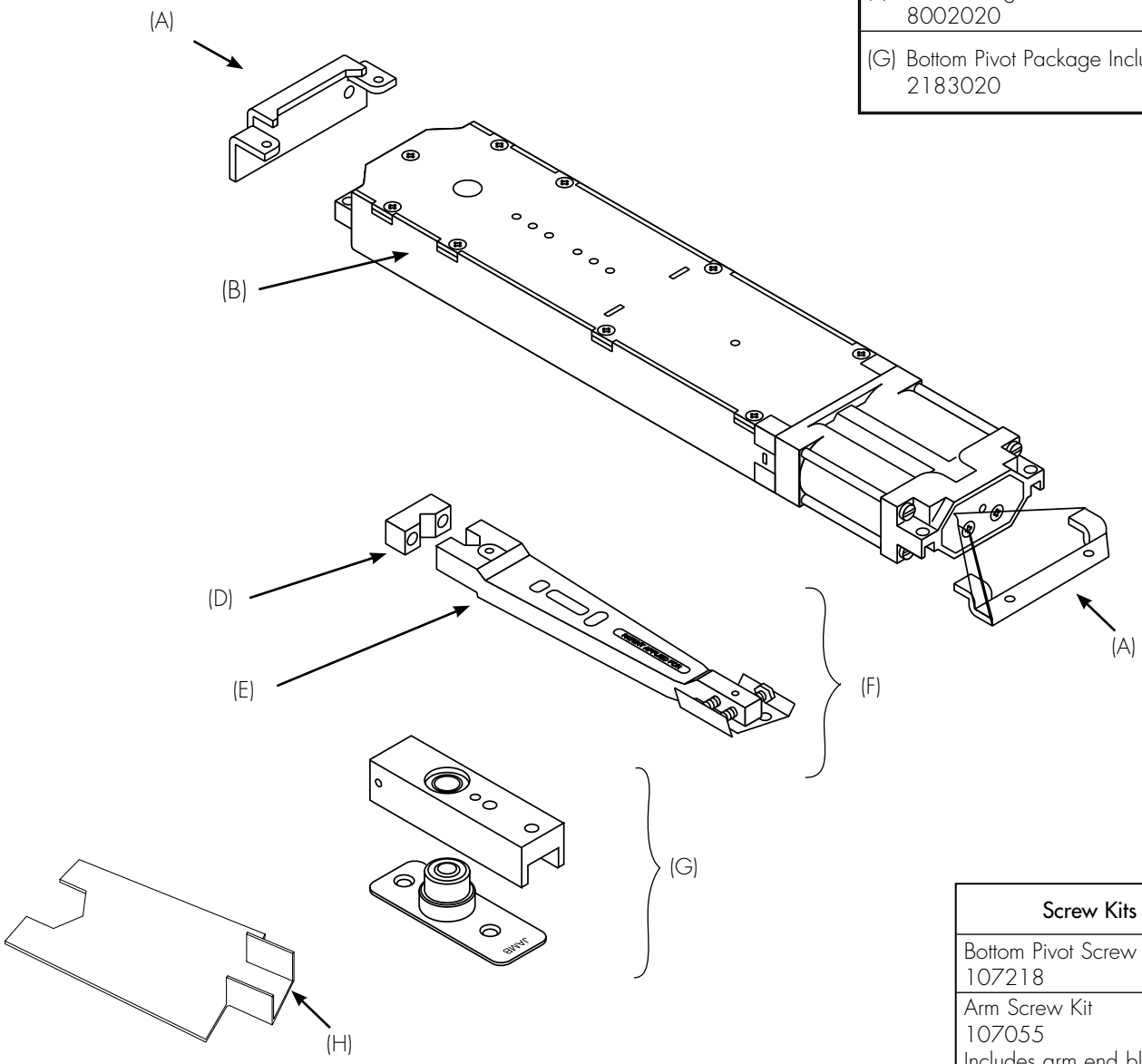


(H) Pivot Wrench
218007

| Screw Kits |
|---|
| Bottom Pivot Screw Kit 107218 |
| Arm Screw Kit 107055 Includes arm end block |
| Arm Block Screw 806018-PKG |



Copyright © 2001-2015, Yale Security Inc., an ASSA ABLOY Group company. All rights reserved.
Reproduction in whole or in part without the express written permission of Yale Security Inc. is prohibited.

M700/M800

**HW-021**
Revision Date:

| |
|---|
| (D) Arm Block 808075-1 |
| (E) Arm Assembly 808175 |

| |
|---|
| (A) Closer Mounting Channel 1929000 |
| (B) Closer Body (Specify Complete Model No. x LAP) |
| (C) Cover Plate<br>**700 Series**<br>7004000R* (RH)<br>7004000L* (LH)<br>**800 Series**<br>8004000-* |
| (F) Arm Package 8002020 |
| (G) Bottom Pivot Package 2183020 Includes H |

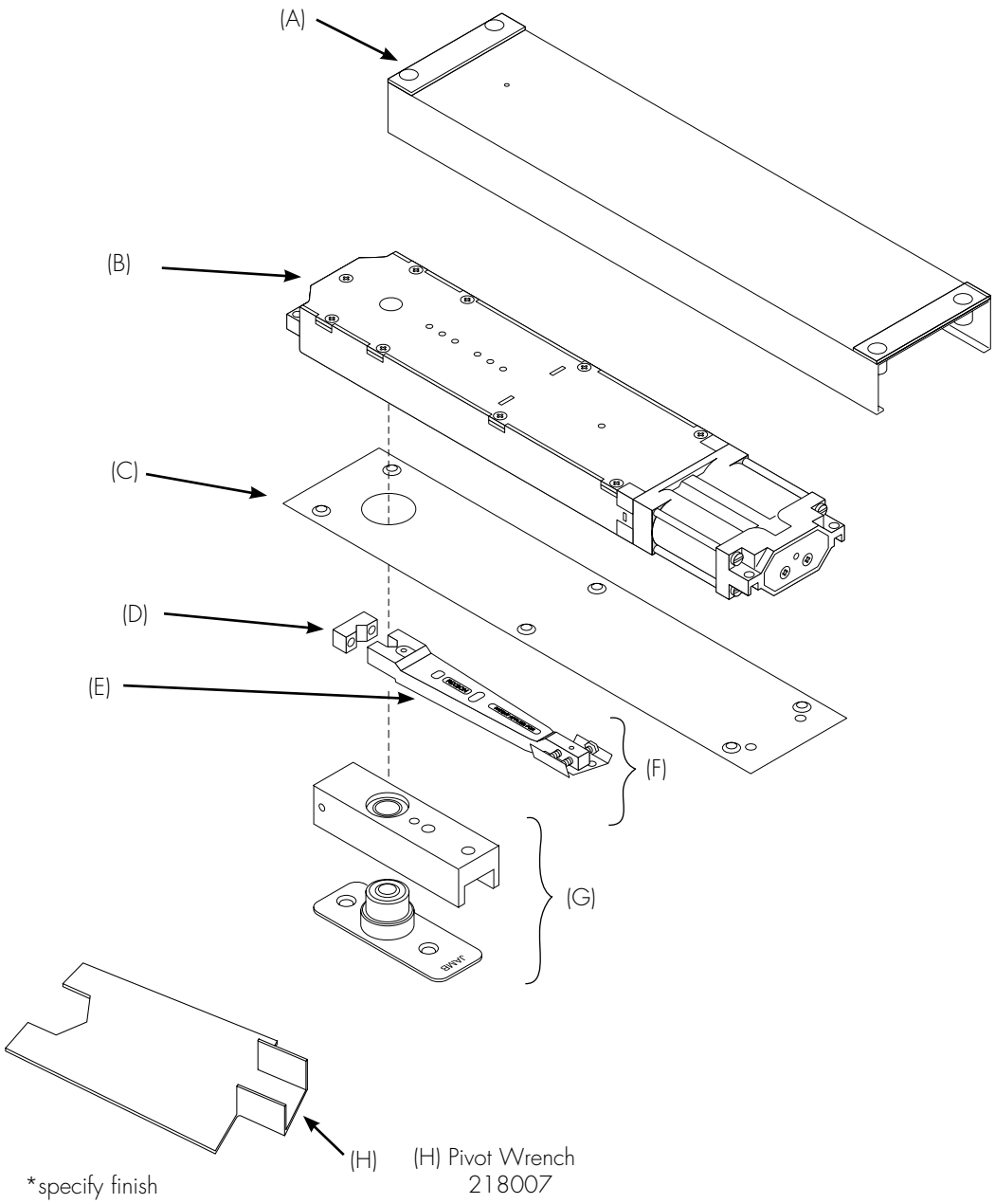


*specify finish

(H) Pivot Wrench 218007

| Screw Kits |
|---|
| Bottom Pivot Screw Kit 107218 |
| Arm Screw Kit 107055 Includes arm end block |
| Arm Block Screw 806018-PKG |
| Cover Plate Screw Kit 107006-* |



Copyright © 2001-2015, Yale Security Inc., an ASSA ABLOY Group company. All rights reserved.
Reproduction in whole or in part without the express written permission of Yale Security Inc. is prohibited.

MW700/MW800

**HW-021**
Revision Date:

| |
|---|
| (D) Arm Block<br>808075-1 |
| (E) Arm Assembly<br>808174 |

| |
|---|
| (A) Closer Mounting Channel<br>1929000 |
| (B) Closer Body<br>(Specify Complete Model No. x LAP) |
| (C) Cover Plate<br>**700 Series**<br>7004000R* (RH)<br>7004000L* (LH)<br>**800 Series**<br>8004000-* |
| (F) Arm Package<br>8002021 |
| (G) Bottom Pivot Package Includes H<br>2183020 |

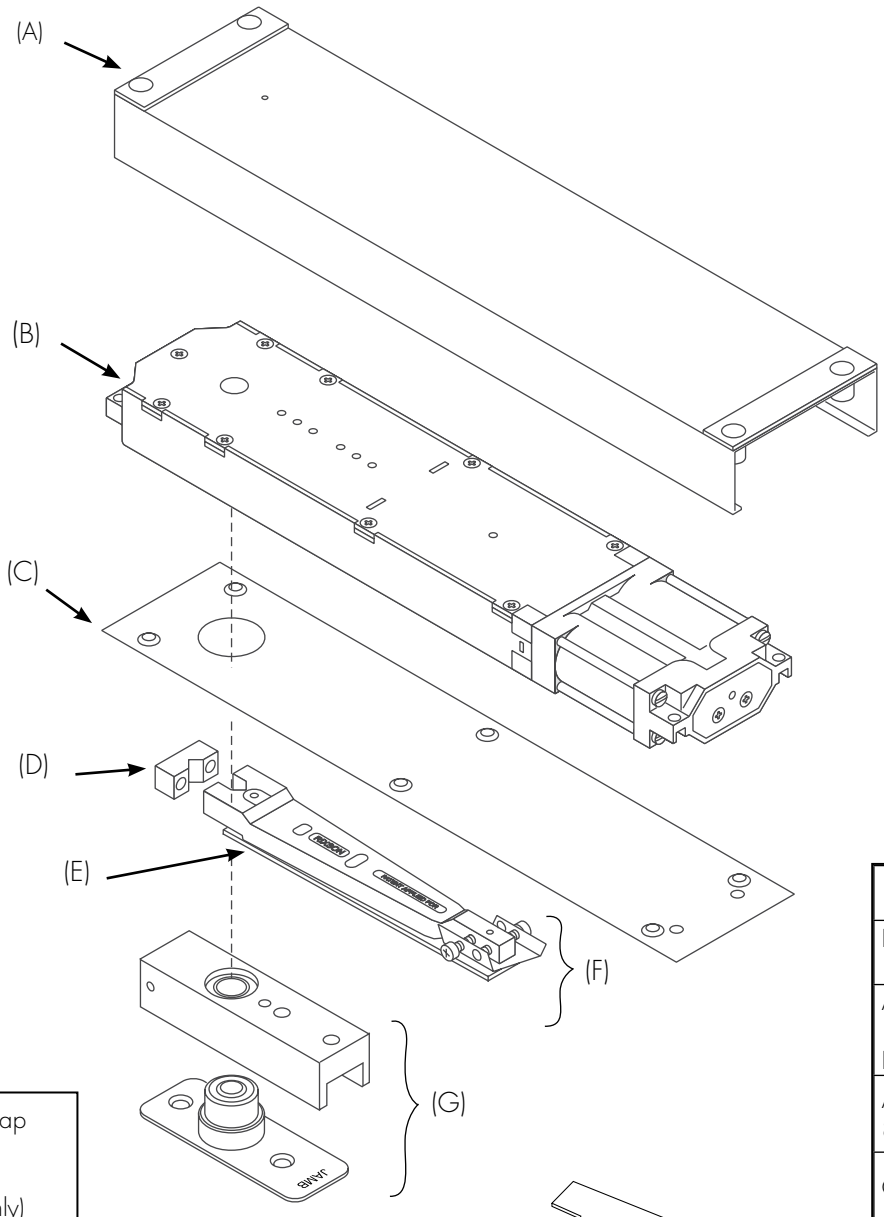


| Screw Kits |
|---|
| Bottom Pivot Screw Kit<br>107218 |
| Arm Screw Kit<br>107055<br>Includes arm end block |
| Arm Block Screw<br>806018-PKG |
| Cover Plate Screw Kit<br>107006-* |

Decorative Arm Cap
(contains 2 caps)
1990906-*
(612 and 627 only)

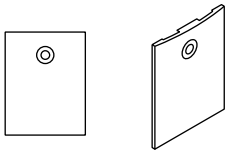

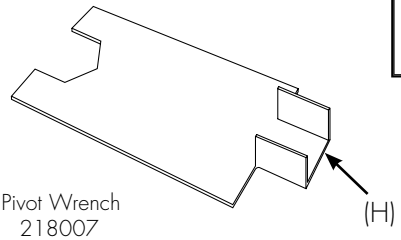


(H) Pivot Wrench
218007

*specify finish



Copyright © 2001-2015, Yale Security Inc., an ASSA ABLOY Group company. All rights reserved.
Reproduction in whole or in part without the express written permission of Yale Security Inc. is prohibited.

**HW-021**
Revision Date:

W700/W800

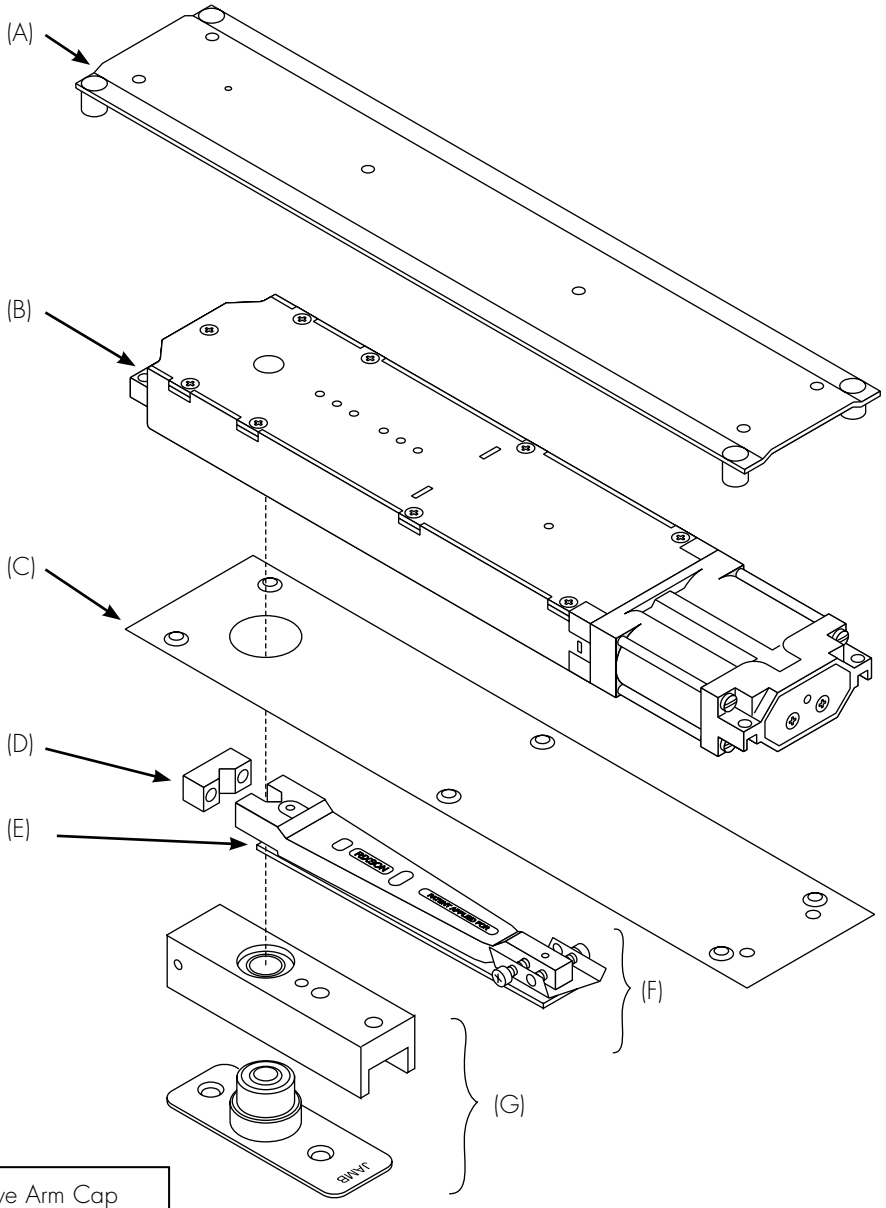


| |
|---|
| (A) Closer Mounting Channel 1980910 |
| (B) Closer Body (Specify Complete Model No. x LAP) |
| (C) Cover Plate 7004000R* (RH) 7004000L* (LH) |
| (D) Arm Block 808075-1 |
| (E) Arm Assembly 808174 |
| (F) Arm Package 8002021 |
| (G) Bottom Pivot Package Includes H 2183020 |

| Screw Kits |
|---|
| Bottom Pivot Screw Kit 107218 |
| Arm Screw Kit 107055 Includes arm end block |
| Arm Block Screw 806018-PKG |
| Cover Plate Screw Kit 107006-* |

Decorative Arm Cap
(contains 2 caps)
1990906-*
(612 and 627 only)

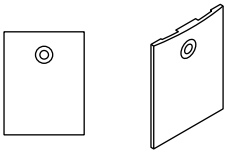

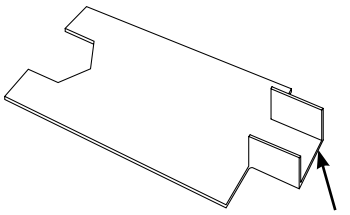

(H) Pivot Wrench
218007

*specify finish



Copyright © 2001-2015, Yale Security Inc., an ASSA ABLOY Group company. All rights reserved.
Reproduction in whole or in part without the express written permission of Yale Security Inc. is prohibited.

# OVERHEAD CONCEALED CLOSERS
## COMMODITY GRADE/OFFSET HUNG

MODEL 0608

**HW-021**
Revision Date:

### Application
- Exterior or interior doors
- Door weight up to 200 lbs.
- Maximum door size 3'8" x 8'0"

### Features
- Single acting
- Non-handed
- Available non-hold open (N) (door swings to 130°)
- Available automatic hold open - specify 90° or 105° (A)
- Arms only available in sprayed finishes
- Adjustable closing and latch speeds
- Removable frame stop is required
- Product should always be used with auxiliary floor or wall stop
- Cannot be used with a top pivot
- Hanging means by others. If products other than 3/4" offset pivots or 4-1/2" x 4-1/2" butt hinges are used, contact factory for special templating and pricing
- 2 year limited warranty

### Optional Features
- Extended spindle; 1/2" longer than standard closer spindle. Must be ordered as part of the closer; cannot be added later

### Models
- M0608 should be used on metal doors and frames. Package includes closer body, arm, frame mounting box 608049PKG*, and cover plate. Frame size 2" x 5-1/2" minimum.
- MW0608 closer should be used on wood doors and metal frames. Package includes closer body, arm, frame mounting box 608049PKG* and cover plate. Frame size 2" x 5-1/2" minimum.
- W0608 closer should be used on wood doors and frames. Package includes closer body, arm, frame mounting box 608049PKG and cover plate. Frame size 2" x 5-1/2" minimum.
- AW0608 closer should be used on wood doors and aluminum frames. Package includes closer body, arm, frame mounting clips and cover plate. Frame size 1-3/4" x 4".

### Technical Information

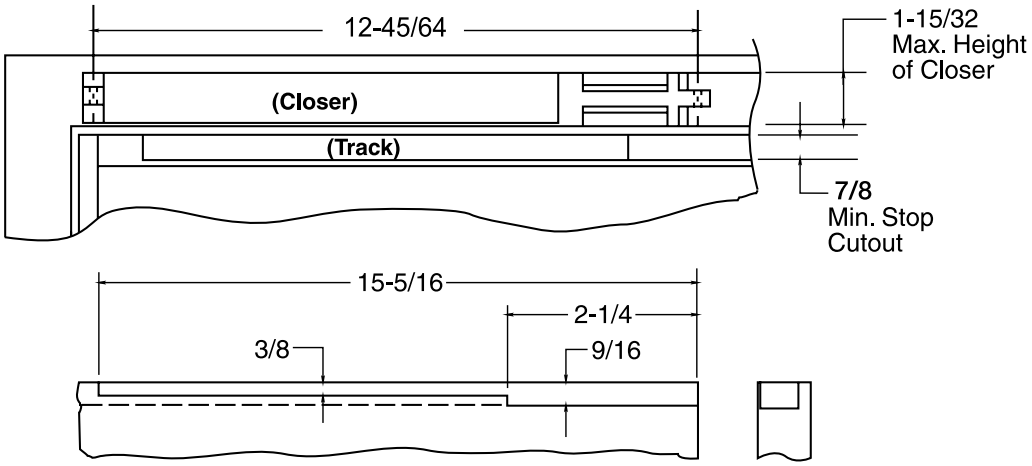


*Note that mounting channels must be welded into frames prior to shipment to job site.


Copyright © 2001-2016, Yale Security Inc., an ASSA ABLOY Group company. All rights reserved.
Reproduction in whole or in part without the express written permission of Yale Security Inc. is prohibited.

## MODEL 0608

### How to Order

| M0608 | 90A | x 1/2" Ext Spdl | x 626 |
|---|---|---|---|
| Model | Hold Open | Suffix | Finish |

**0608** - Closer for Aluminum Door and Frames
**M0608** - Closer for Metal Doors and Frames
**MW0608** - Closer for Wood Doors and Metal Frames
**W0608** - Closer for Wood Doors and Frames
**AW0608** - Closer for Wood Doors & Aluminum Frams

**90A** - Hold Open
**105A** - Hold Open
**N** - Non-Hold Open

1/2" Extended Spindle

**All Arms Are**
689 Sprayed Alum
690 Sprayed Dk Brz
691 Sprayed Lt Brz
693 Sprayed Black
696 Sprayed Brass

**Cover Plates**
605 Bright Brass
606 Satin Brass
611 Bright Bronze
612 Satin Bronze
613 Dark Bronze
619 Satin Nickel
622 Flat Black
625 Bright Chrome
626 Satin Chrome


Copyright © 2001-2015, Yale Security Inc., an ASSA ABLOY Group company. All rights reserved.
Reproduction in whole or in part without the express written permission of Yale Security Inc. is prohibited.

0608/AW0608

**HW-021**
Revision Date:

| (C) Arm Assembly (sprayed finishes only) 0608312-* |
|---|
| (D) Rail 0608109 |

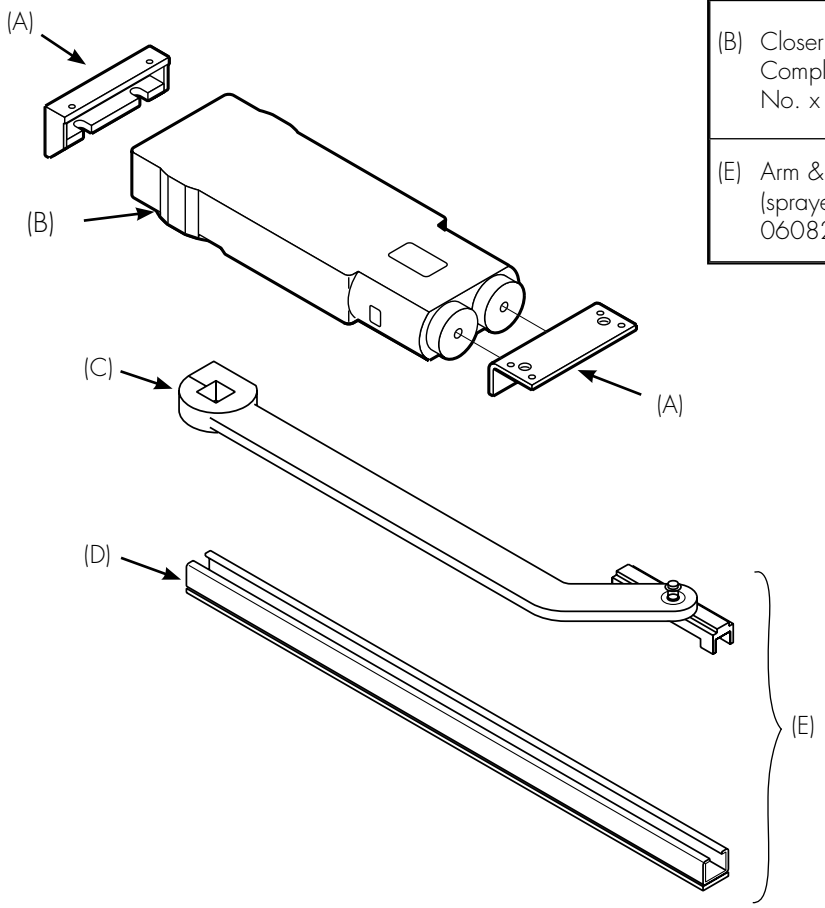


| (A) Closer Mounting Kit 608019 |
|---|
| (B) Closer Body (Specify Complete Model No. x LAP) |
| (E) Arm & Rail Package (sprayed finishes only) 06082012-* |

| Screw Kit |
|---|
| Screw Kit 608064 |


Copyright © 2001-2015, Yale Security Inc., an ASSA ABLOY Group company. All rights reserved.
Reproduction in whole or in part without the express written permission of Yale Security Inc. is prohibited.

M0608/MW0608/W0608

**HW-021**
Revision Date:

| |
|---|
| (D) Arm Assembly (sprayed finishes only) 0608312-* |
| (E) Rail 0608109 |

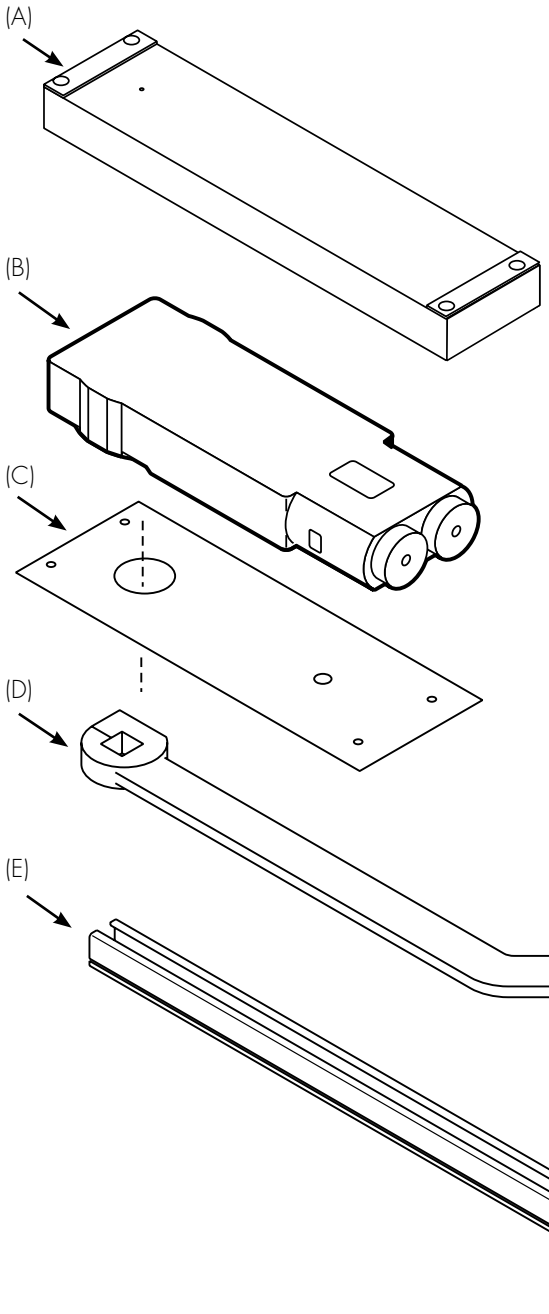


| |
|---|
| (A) Closer Mounting Kit 608049PKG |
| (B) Closer Body (Specify Complete Model No. x LAP) |
| (C) Cover Plate 6084000-* |
| (F) Arm & Rail Package (sprayed finishes only) 06082012-* |

| Screw Kits |
|---|
| Cover Plate Screw Kit 107022-* |
| Screw Kit 608064 |

*specify finish

*specify finish



Copyright © 2001-2015, Yale Security Inc., an ASSA ABLOY Group company. All rights reserved.
Reproduction in whole or in part without the express written permission of Yale Security Inc. is prohibited.

## MODEL 608

**HW-021**
Revision Date:

### Application

- Exterior or interior doors
- Door weight up to 200 lbs.
- Maximum door size: interior 3'8" x 8'0"; exterior 3'6" x 8'0"

End load arm shown

Features

- Single or double acting
- Non-handed
- Available in non-hold open (N) (door swings to 130° each direction)
- Available in automatic hold open (both directions). Specify 90° or 105° (A)
- Adjustable closing and latch speeds
- Includes 608011 bottom pivot
- Frame stop is required. See Door Control Accessories, page 8 #60131. Order separately.
- Product should always be used with auxiliary floor or wall stop
- 2 year limited warranty

### Optional Features

- Extended spindle; 1/2" longer than standard closer spindle. Must be ordered as part of the closer; cannot be added later
- 199 end caps for top and bottom of wood door

### Compliance

- ANSI CO5052/CO5062
- Compliant to ANSI A156.4 standards

### Models

- 608EL closers should be used on aluminum doors and frames. Package includes closer body, arm, frame mounting clips, and bottom pivot 608011. This can be used in an aluminum frame that is 1-3/4" x 4".
- 608SL closers should be used on aluminum door and frames with an arm that attaches to the spindle thru the face of the door. Package includes body arm, frame, mounting clips and bottom pivot 608011. This can be used on a frame that is 1-3/4" x 4".
- M608 closers should be used  should be used on metal doors and frames. Package includes closer body, arm, frame mounting box 608049PKG*, cover plate and bottom pivot 608011. Frame size 2" x 5-1/2" minimum.
- MW608 closer should be used on wood doors and metal frames. Package includes closer body, arm, frame mounting box 608049PKG*, cover plate and bottom pivot 608011. Frame size 2" x 5-1/2" minimum.
- W608 closer should be used on wood doors and frames. Package includes closer body, arm, frame, mounting box 608049PKG, cover plate and bottom pivot 608011. Frame size 2" x 5-1/2" minimum.
- AW608 closer should be used on wood doors and aluminum frames. Package includes closer body, arm, frame mounting clips, and bottom pivot 608011. Frame size 1-3/4" x 4".

*Note that mounting channels must be welded into frames prior to shipment to job site.


Copyright © 2001-2015, Yale Security Inc., an ASSA ABLOY Group company. All rights reserved.
Reproduction in whole or in part without the express written permission of Yale Security Inc. is prohibited.

## MODEL 608

### Technical Information

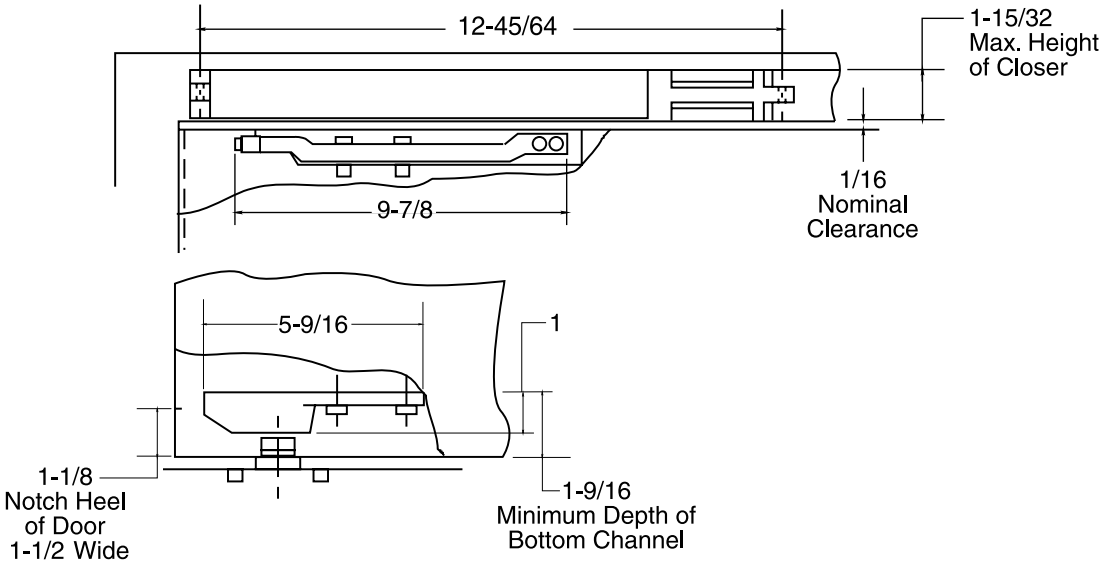


### How to Order

| M 608 Model | 90A Hold Open | x 1/2" Ext Spdl Suffix | x 626 Finish |
|---|---|---|---|

**608EL** - End Load Arm Closer for Aluminum Doors and Frames
**608SL** - Side Load Arm Closer for Aluminum Doors and Frames
**M608** - Closer for Metal Doors and Frames
**MW608** - Closer for Wood Doors and Metal Frames
**W608** - Closer for Wood Doors and Frames
**AW608** - Closer for Wood Doors & Aluminum Frams

**90A** - Hold Open
**105A** - Hold Open
**N** - Non-Hold Open

1/2" Extended Spindle

**All Arms Are**
689 Sprayed Alum
690 Sprayed Dk Brz
691 Sprayed Lt Brz
693 Sprayed Black
696 Sprayed Brass

**Cover Plates**
605 Bright Brass
606 Satin Brass
611 Bright Bronze
612 Satin Bronze
613 Dark Bronze
619 Satin Nickel
622 Flat Black
625 Bright Chrome
626 Satin Chrome


Copyright © 2001-2015, Yale Security Inc., an ASSA ABLOY Group company. All rights reserved.
Reproduction in whole or in part without the express written permission of Yale Security Inc. is prohibited.

608EL/608SL

**HW-021**
Revision Date:

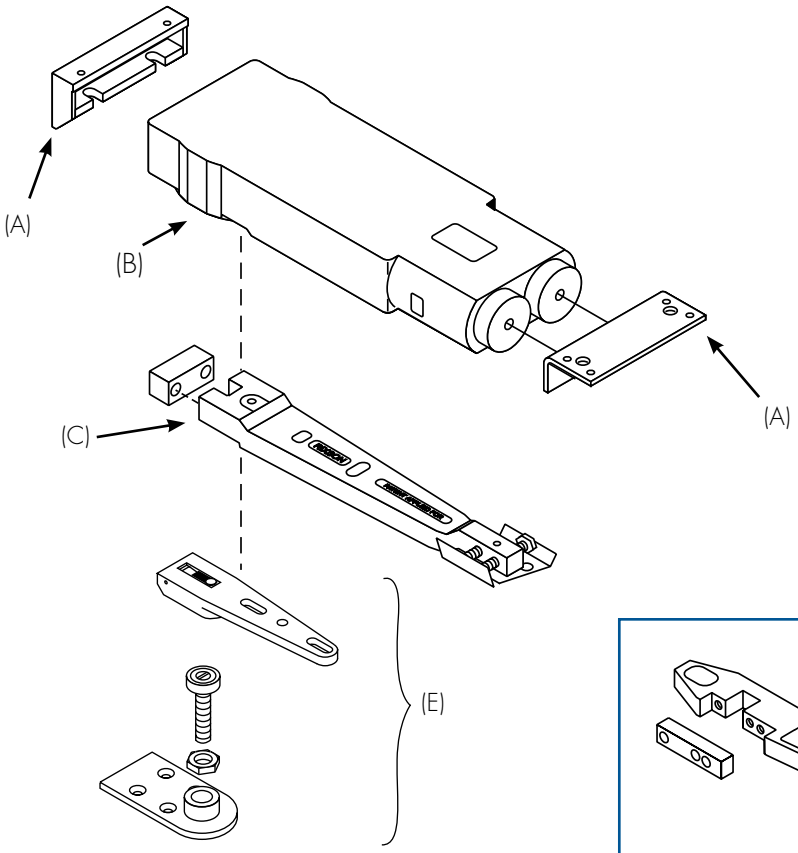


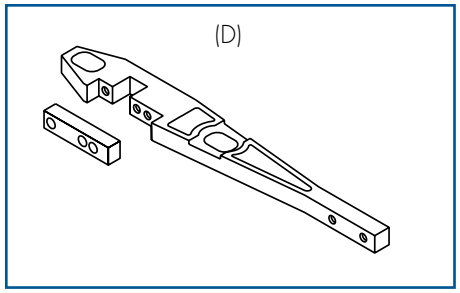


| |
|---|
| (A) Closer Mounting Kit 608019 |
| (B) Closer Body (Specify Complete Model No. x LAP) |
| (C) End Load Arm Pkg 6002020 |
| (D) Side Load Arm 608005S |
| (E) Bottom Pivot with Screws 608011A |

| Screw Kit |
|---|
| Arm Screw Kit (Includes arm end block) 107065 |
| Bottom Pivot Screw Kit 107143 |

*specify finish


Copyright © 2001-2015, Yale Security Inc., an ASSA ABLOY Group company. All rights reserved.
Reproduction in whole or in part without the express written permission of Yale Security Inc. is prohibited.

M608

**HW-021**
Revision Date:

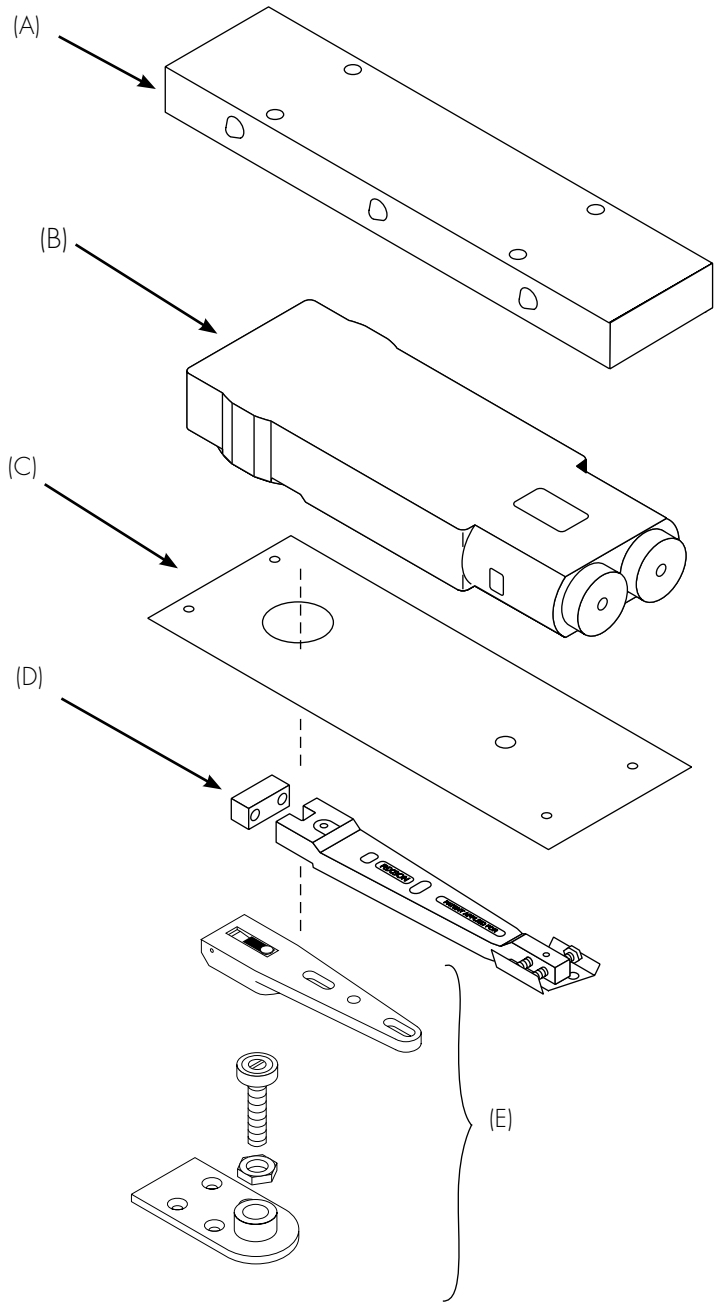


| |
|---|
| (A) Closer Mounting Kit 608049PKG |
| (B) Closer Body (Specify Complete Model No. x LAP) |
| (C) Cover Plate 6084000 - * |
| (D) Arm Package 6002020 |
| (E) Bottom Pivot 608011A |

| Screw Kits |
|---|
| Arm Screw Kit 107065 Includes arm end block |
| Cover Plate Screw Kit 107022-* |
| Bottom Pivot Screw Kit 107143 |

| |
|---|
| Decorative Arm Cap (contains 2 caps) 1990906-* (612 and 627 only) |

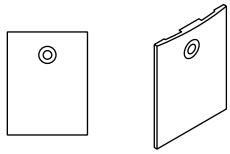

*specify finish



Copyright © 2001-2015, Yale Security Inc., an ASSA ABLOY Group company. All rights reserved.
Reproduction in whole or in part without the express written permission of Yale Security Inc. is prohibited.

MW608/W608

**HW-021**
Revision Date:

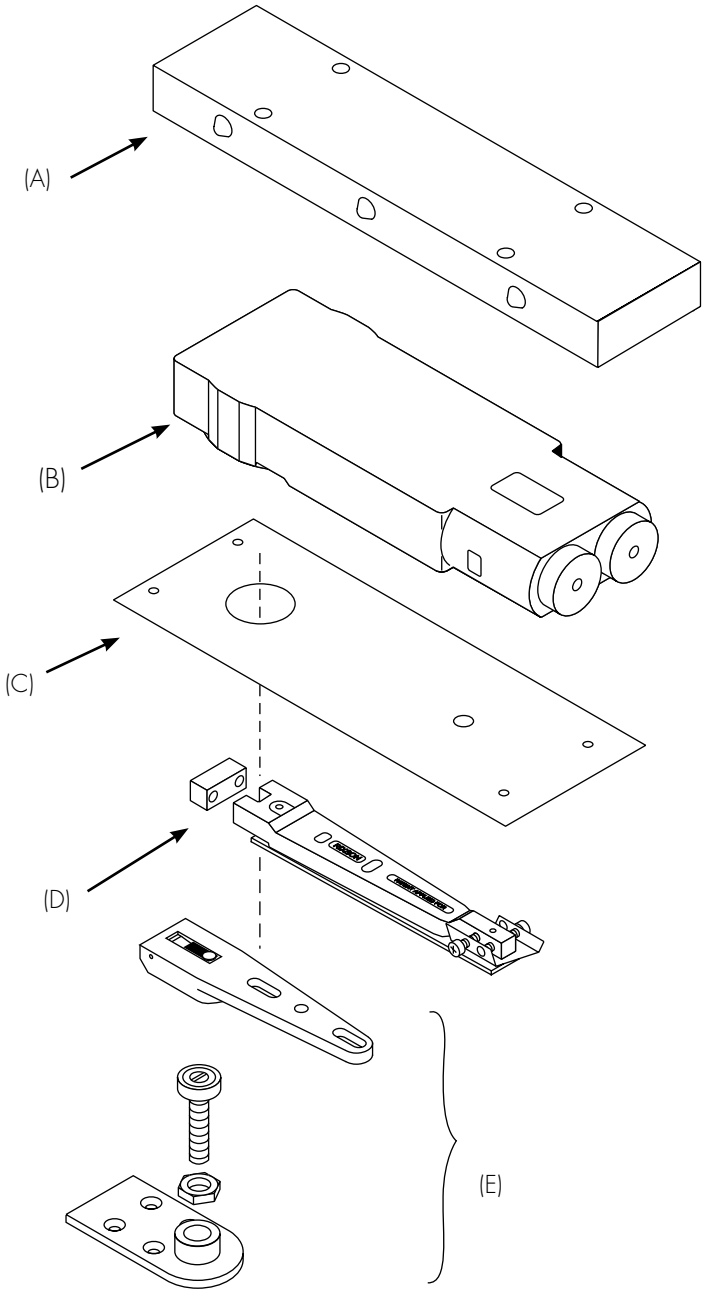


| |
|---|
| (A) Closer Mounting Kit 608049PKG |
| (B) Closer Body (Specify Complete Model No. x LAP) |
| (C) Cover Plate 6084000 - * |
| (D) Arm Package 6002021 |
| (E) Bottom Pivot 608011A |

| Screw Kits |
|---|
| Bottom Pivot Screw Kit 107143 |
| Arm Screw Kit 107065 Includes arm end block |
| Cover Plate Screw Kit 107022-* |

Decorative Arm Cap
(contains 2 caps)
1990906-*
(612 and 627 only)

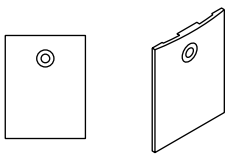

*specify finish



Copyright © 2001-2015, Yale Security Inc., an ASSA ABLOY Group company. All rights reserved.
Reproduction in whole or in part without the express written permission of Yale Security Inc. is prohibited.

AW608

**HW-021**
Revision Date:

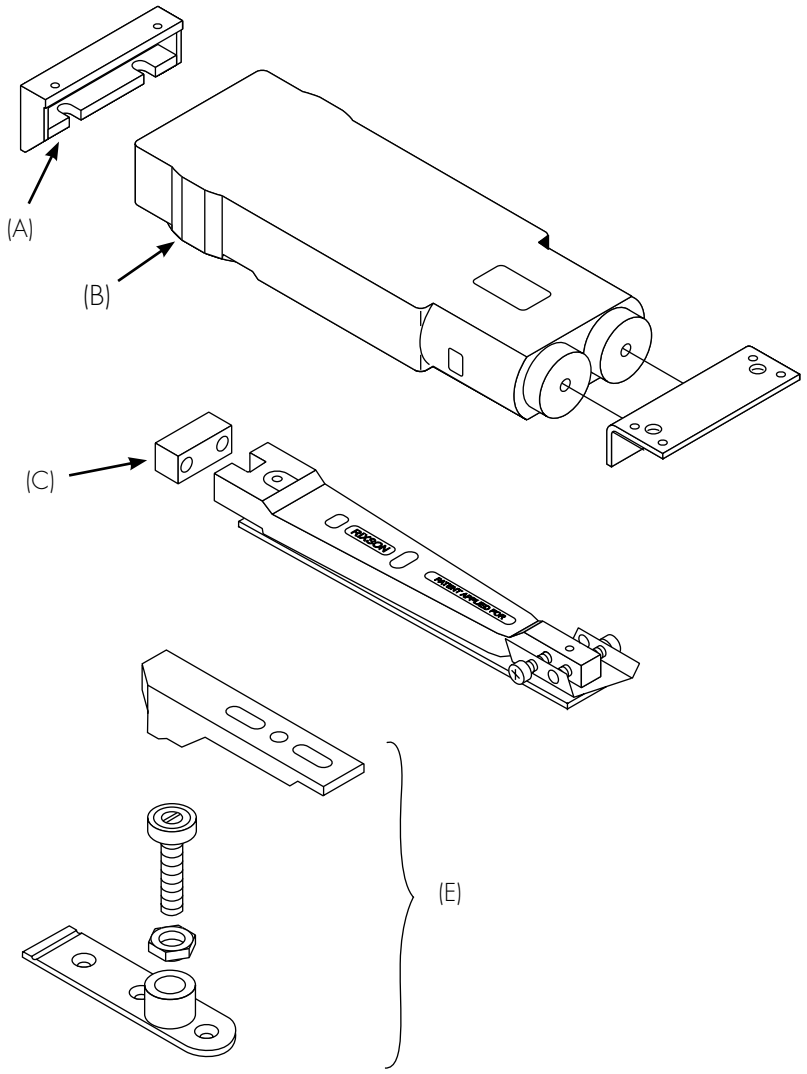


| |
|---|
| (A) Closer Mounting Kit 608019 |
| (B) Closer Body (Specify Complete Model No. x LAP) |
| (C) End Load Arm Pkg 6002021 |
| (E) Bottom Pivot with Screws 608011A |

| Screw Kits |
|---|
| Arm Screw Kit (Includes arm end block) 107065 |
| Bottom Pivot Screw Kit 107143 |


Copyright © 2001-2015, Yale Security Inc., an ASSA ABLOY Group company. All rights reserved.
Reproduction in whole or in part without the express written permission of Yale Security Inc. is prohibited.

**HW-021**
Revision Date:

CONTACT US AT:

Rixson®
3000 Highway 74 East
Monroe, NC 28112
Tel: 800-457-5670
Fax: 800-221-0489

ASSA ABLOY Door Security Solutions Canada
160 Four Valley Drive
Vaughan, Ontario, L4K 4T9 Canada
Tel: 800-461-3007
Fax: 800-461-8989

For a complete listing of products and applications please visit our web site.
www.rixson.com
www.assaabloy.ca

Rixson® and Rixson and Design® are registered trademarks of Yale Security Inc., an ASSA ABLOY Group company. Other products' brand names may be trademarks or registered trademarks of their respective owners and are mentioned for reference purposes only. Rixson is a brand associated with Yale Security Inc., an ASSA ABLOY Group company. Copyright © 2001-2016, Yale Security Inc. All rights reserved. Reproduction in whole or in part without the express written permission of Yale Security Inc. is prohibited.

ASSA ABLOY is the global leader in door opening solutions, dedicated to satisfying end-user needs for security, safety and convenience.

HW-022

Revision Date:

# Checkmate® Stops & Holders

Absolute Door Control and
Entire Opening Protection

RIXSON

ASSA ABLOY

ASSA ABLOY, the global leader
in door opening solutions

General Information ..... 3
How to Select Product ..... 4
Options ..... 5
Certifications ..... 5
Limited Warranty ..... 5
Specifications ..... 5
#1 Heavy-Duty Concealed ..... 6
#1ADJ Heavy-Duty Concealed Adjustable ..... 7
#2 Standard-Duty Concealed Adjustable ..... 8
#5 Standard-Duty Concealed ..... 9
#6 Low Profile Concealed ..... 10
#6ADJ Low Profile Concealed Adjustable ..... 11
#7 Surface Cantilever Holder ..... 12
#8HD Extra Heavy-Duty Double Lever ..... 13
#9 Heavy-Duty Surface ..... 14
#9ADJ Adjustable Heavy-Duty Surface ..... 15
#10 Standard-Duty Surface Adjustable ..... 16
#55 Standard-Duty Surface ..... 17
Parts Drawings ..... 18
How to Order ..... 19



Copyright © 2013, Yale Security Inc., an ASSA ABLOY Group company. All rights reserved.
Reproduction in whole or in part without the express written permission of Yale Security Inc. is prohibited.

Checkmate® overhead stops and holders are used to extend the life of the door, frame and any door closing devices. They may be necessary if there are strong winds, high traffic or abuse.

- When used in conjunction with a floor closer, you have absolute door control, top and bottom
- Provides positive deadstop at selected degree
- There are three functions, four ways to order
    - Friction Stay – used on doors without closers to keep doors open
    - Hold Open – door remains held open near deadstop location
    - Stops – door deadstops at a particular degree of opening
    - Multi Function – adaptable as hold open and/or stops
- Available as surface mounted or concealed
- Standard mount on push side of door (see model descriptions for pull side installations)
- Thru bolts are furnished with all surface models and must be used for installation.

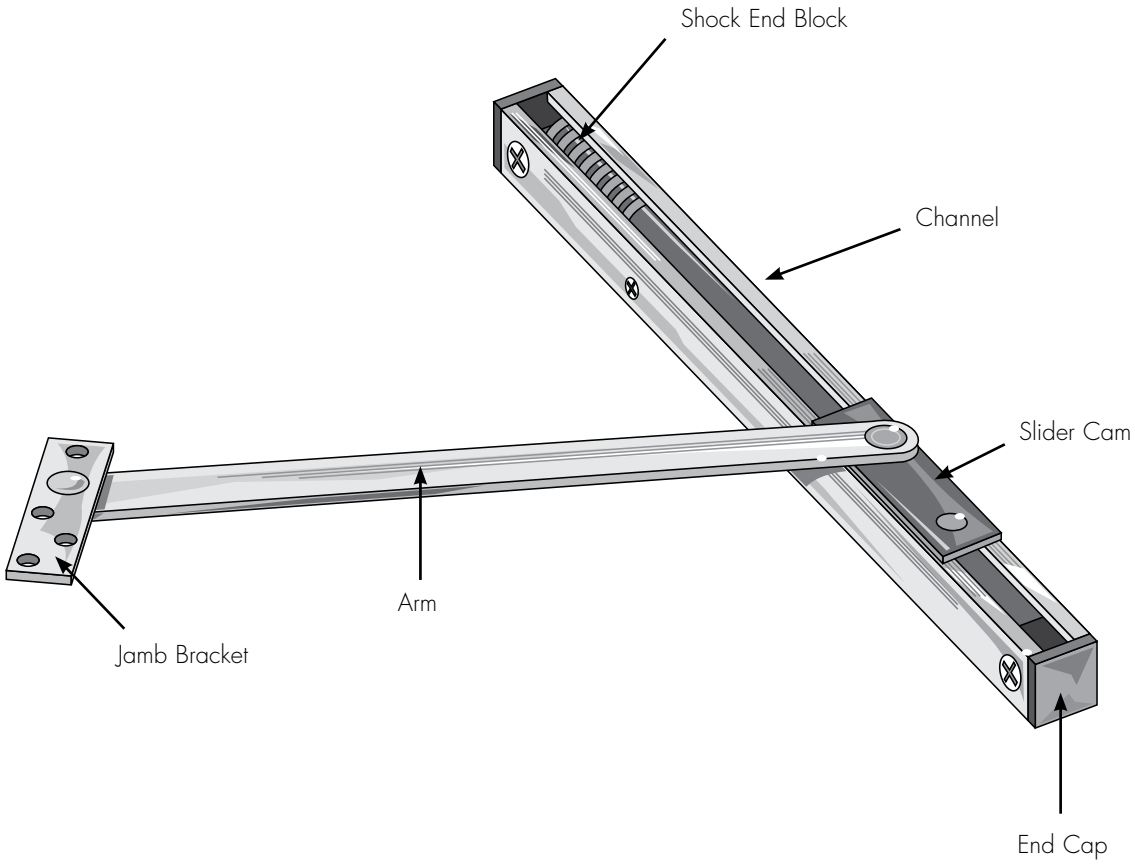



Copyright © 2013, Yale Security Inc., an ASSA ABLOY Group company. All rights reserved.
Reproduction in whole or in part without the express written permission of Yale Security Inc. is prohibited.

## CONCEALED MOUNTING

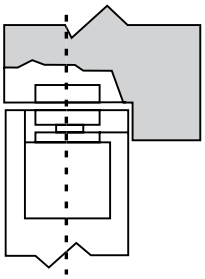

### Method A – Standard Installation, Single Acting Nos. 1, 1ADJ, 2, 5, 6, 6ADJ Series

For single acting doors, the jamb bracket is mortised into the frame and the channel mortised into the top of the door. Both the bracket and channel are secured with wood or machine screws.

A cutout for the arm is required on the stop side of the door only. A hole must be drilled for the control knob of the No. 1 Series holder only.

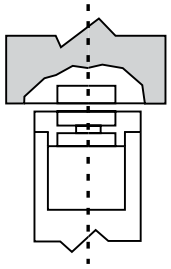

### Method B – Standard Installation, Double Acting Nos. 1, 1ADJ, 2, 5, 6, 6ADJ Series

For double acting center hung floor closer or pivot applications.

Mounting is similar to Method A, with the exception that the cutout for the arm is required on both sides of the door.

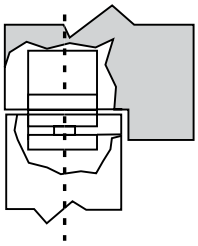

### Method C - Inverted Installation, Single Acting Nos. 2, 5 Series

Recommended for doors with minimum top rail depth. The arm and jamb bracket are mortised into the door, and the channel is installed in the header with wood or machine screws. The cutout for the arm is required on the stop side of the door only.

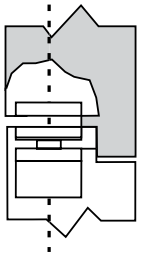

### Method D - Rabbeted Door Installation, Single Acting No. 2, 5 Series

This method is designed for 1-3/4" doors with 1/2" maximum rabbet. The jamb bracket is mortised into the header and the arm and channel are mortised into the door. Wood or machine screws are used for fastening. The cutout for the arm is required on the stop side of the door only.

## SURFACE MOUNTING

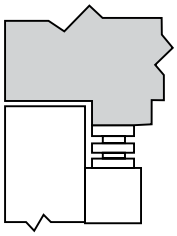

### Method No. 1 – Standard Installation (Push side of door) Nos. 8HD, 9, 9ADJ, 10, 55 Series

The jamb bracket mounts on the soffit with wood or machine screws. The channel mounts to the door with sex bolts.

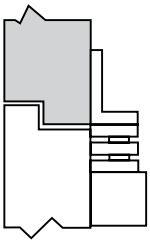

### Method No. 2 – Rabbeted Door Installation (Push side of door) Nos. 8HD, 9, 9ADJ, 10, 55 Series

A special angle jamb bracket adapter mounts on the header with wood or machine screws. The jamb bracket attaches to the adapter with machine screws. The channel fastens to the door with sex bolts. (**Same bracket as used with Method 3 and 5. See catalog for bracket number for each model.**)

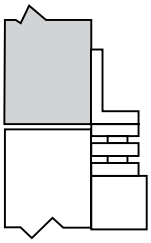

### Method No. 3 - Flush Door Installation (Push side of door) Nos. 8HD, 9, 9ADJ, 10, 55 Series

This method of installation is identical to Method No. 2 for Rabbeted Doors. (**Same bracket as used with Method 2 and 5. See catalog for bracket number for each model.**)

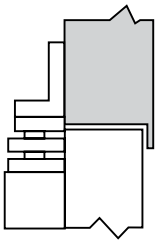

### Method No. 5 - Reverse Installation (Pull side of door) Nos. 9, 9ADJ, 10 and 55 Series

The jamb bracket adapter is secured to the header with wood or machine screws. The jamb bracket fastens to the adapter with machine screws and the channel mounts on the door with sex bolts. **(Same bracket as used with Method 2 and 3. See catalog for bracket number.)**


Copyright © 2013, Yale Security Inc., an ASSA ABLOY Group company. All rights reserved.
Reproduction in whole or in part without the express written permission of Yale Security Inc. is prohibited.

**Less Spring – Suffix LS**

Heavy-duty slide track type stops have a spring in the end of the channel that keeps the slider from deadstopping. If these units are being used with electromechanical closer, where the door, must deadstop, the LS option is needed. Available only with models 1 and 9.

**Angle Jamb Bracket Adapter**

**Standard-duty models suffix 5258 (non-handed)**

**Heavy-duty models suffix 5458 (LH) or 5459 (RH)**

When surface mounted units are mounted on a rabbeted door on the push side, flush door and transom on the push side, or in a reverse installation on the pull side of the door, a special bracket is needed. Note: not all models can be mounted on the pull side of the door (see specific model numbers in catalog.)

5258

5458/5459

**Security Screws – Suffix Torx®**

Security screws can be supplied for exposed fasteners.

## CERTIFICATIONS

All Rixson Checkmate® overhead stops and holders are in compliance with ANSI/BHMA A156.8, Grade 1 and 2 Standards. See individual products for sub sections. See individual models for UL Listing.

## LIMITED WARRANTY

Rixson Checkmate® stops and holders are warranted for 2 years for defect. See Rixson price book for specific details of the limited warranty.

## SPECIFICATIONS

All overhead stops and holders shall be from a single manufacturer.

Standard-duty models used for interior or low to moderate traffic doors.

Heavy-duty models used for exterior or high traffic doors or doors subject to abuse.

For extremely abusive areas or high winds use double lever arm type.

Coordinate deadstop and/or hold open location with concealed floor closers.

Checkmate products provide hold open and/or deadstop.



Copyright © 2013, Yale Security Inc., an ASSA ABLOY Group company. All rights reserved.
Reproduction in whole or in part without the express written permission of Yale Security Inc. is prohibited.

1 SERIES

**HW-022**
Revision Date:

### Product Description & Features

- Heavy-duty
- Interior or exterior doors
- Doors may be single or double acting
- Non-handed
- Slide track design
- Recommended for high traffic, heavy abuse installations
- Heavy shock absorber spring provides 5 -7° compression before dead stop
- LS option omits spring for special applications
- Surface on/off knob on hold open models
- Stop, friction stay or hold open functions
- Complete screw packet for installation in wood and machine screws for door and frame.
- For security areas, Torx® screws available for exposed fasteners
- Standard architectural finishes
- Durable slider cam and shock block
- 110° maximum opening
- 1-3/4" minimum door thickness, for thicker doors, note thickness when ordering
- 1-3/16" square channel
- Stop function UL listed for fire door assemblies
- Hanging means other than standard butts or offset pivots require special templating and pricing. Consult factory

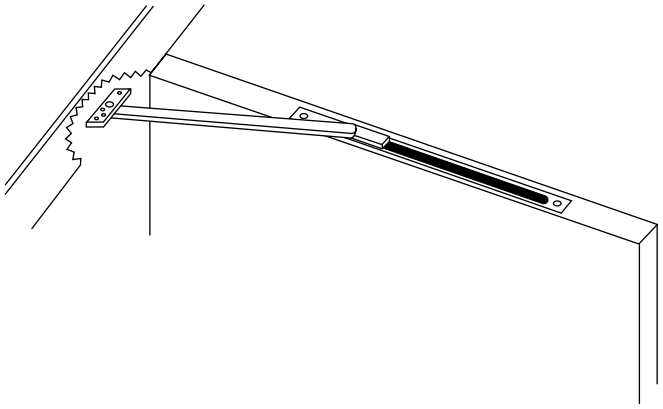

### Door Opening Chart (in inches)

| Butts Offset Pivots | Center Hung Pivots | Model Number | | |
|---|---|---|---|---|
| | | Friction | H.O. | Stop |
| *24 - 28 | — | 1-116 | 1-126 | 1-136 |
| 28-1/16 - 33 | 30 - 36 | 1-216 | 1-226 | 1-236 |
| 33-1/16 - 38 | 36-1/16 - 41 | 1-316 | 1-326 | 1-336 |
| 38-1/16 - 43 | 41-1/16 - 46 | 1-416 | 1-426 | 1-436 |
| 43-1/16 - 48 | 46-1/16 - 50 | 1-516 | 1-526 | 1-536 |

| | ANSI No. | | |
|---|---|---|---|
| Shipping Weight 4.5 lbs. | Friction | H.O. | Stop |
| | C01531 | C01511 | C01541 |

***Butt hung only on this size door. No swing clear hinges.**


Copyright © 2013, Yale Security Inc., an ASSA ABLOY Group company. All rights reserved.
Reproduction in whole or in part without the express written permission of Yale Security Inc. is prohibited.

## 1ADJ SERIES

**HW-022**
Revision Date:

### Product Description & Features

- Adjustable, heavy-duty
- Interior or exterior doors
- Doors may be single or double acting
- Non-handed
- Slide track design
- Recommended for high traffic, heavy abuse situations
- Heavy shock absorber spring provides 5-7° compression before dead stop
- Order specifically as a stop or hold open
- Degree of opening is fully adjustable and can be adapted to changing needs
- Complete screw packet kit for installation in wood or metal door and frame
- For security areas, Torx® screws available for exposed fasteners
- Standard architectural finishes
- Durable slider cam and shock block
- 110° maximum opening (except 1ADJ for center hung 30-36" door which is 105°)
- 1-3/4" minimum door thickness, for thicker doors consult factory
- 1-3/16" square channel
- Stop function UL listed for fire door assemblies
- Hanging means other than standard butts or offset pivots require special templating and pricing. Consult factory

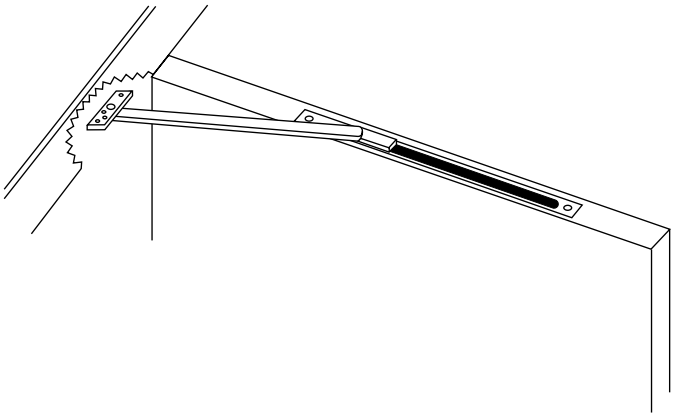

### Door Opening Chart (in inches)

| Butts Offset Pivots | Center Hung Pivots | Model Number | |
|---|---|---|---|
| | | H.O. | Stop |
| *24 - 28 | — | 1ADJ-126 | 1ADJ-136 |
| 28-1/16 - 33 | 30 - 36 | 1ADJ-226 | 1ADJ-236 |
| 33-1/16 - 38 | 36-1/16 - 41 | 1ADJ-326 | 1ADJ-336 |
| 38-1/16 - 43 | 41-1/16 - 46 | 1ADJ-426 | 1ADJ-436 |
| 43-1/16 - 48 | 46-1/16 - 50 | 1ADJ-526 | 1ADJ-536 |

***Butt hung only on this size door. No swing clear hinges.**

| | ANSI No. | |
|---|---|---|
| | H.O. | Stop |
| Shipping Weight 4.5 lbs. | C01511 | C01541 |



Copyright © 2013, Yale Security Inc., an ASSA ABLOY Group company. All rights reserved.
Reproduction in whole or in part without the express written permission of Yale Security Inc. is prohibited.

2 SERIES

**HW-022**
Revision Date:

### Product Description & Features

- Adjustable, standard duty
- Interior doors
- Doors may be single or double acting
- Non-handed
- Slide track design
- Recommended for moderate traffic, medium weight doors
- Degree of opening is fully adjustable and can be adapted to changing needs
- Heavy shock absorber spring provides 5 -7° compression before dead stop
- Can be ordered specifically as a stop, friction stay, or hold open
- Multi-function unit is shipped as a stop. Can be converted to a hold open or friction in the field. 5012-PKG (Adapter kit) included
- Complete screw packet kit for installation in wood or metal door and frame
- For security areas, Torx® screws available for exposed fasteners, but heavy-duty units should be considered for high security applications
- Standard architectural finishes
- Durable slider cam and shock block
- 110° maximum opening
- 3/4" square channel
- Stop function UL listed for fire door assemblies
- Hanging means other than standard butts or offset pivots require special templating and pricing. Consult factory

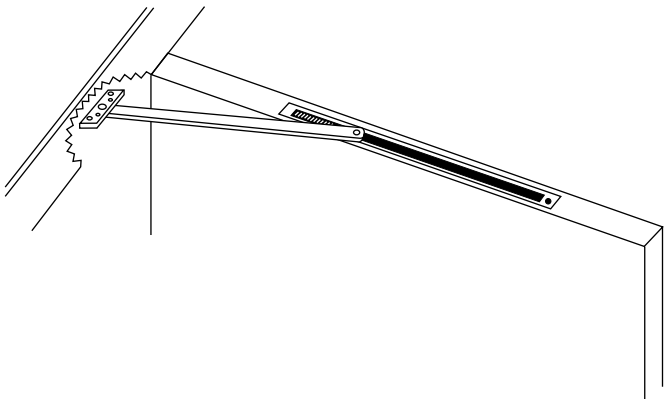

### Door Opening Chart (in inches)

| Butts Offset Pivots | Center Hung Pivots | Model Number | | | |
|---|---|---|---|---|---|
| | | Friction | H.O. | Stop | Multi |
| *18 - 24 | — | 2-116 | 2-126 | 2-136 | 2-146 |
| 24-1/16 - 30 | 27 - 32 | 2-216 | 2-226 | 2-236 | 2-246 |
| 30-1/16 - 36 | 32-1/16 - 38-1/2 | 2-316 | 2-326 | 2-336 | 2-346 |
| 36-1/16 - 42 | 38-9/16 - 45 | 2-416 | 2-426 | 2-436 | 2-446 |
| 42-1/16 - 48 | 45-1/16 - 48 | 2-516 | 2-526 | 2-536 | 2-546 |

| | ANSI No. | | |
|---|---|---|---|
| Shipping Weight 3.5 lbs. | Friction | H.O. | Stop |
| | C04532 | C04512 | C04542 |

***Butt hung only on this size door. No swing clear hinges.**


Copyright © 2013, Yale Security Inc., an ASSA ABLOY Group company. All rights reserved.
Reproduction in whole or in part without the express written permission of Yale Security Inc. is prohibited.

**HW-022**
Revision Date:

5 SERIES

### Product Description & Features

- Standard duty
- Interior doors
- Doors may be single or double acting
- Non-handed
- Slide track design
- Recommended for moderate traffic, medium weight interior doors
- Degree of opening determined by templating – not field adjustable.
- Heavy shock absorber spring provides 5-7° compression before dead stop
- Complete screw packet allows for installation in wood or metal door and frame
- For security areas, Torx® screws available for exposed fasteners, but heavy-duty units should be considered for high security applications
- Available in 652 and sprayed finishes only
- Durable slider cam and shock block
- 110° maximum opening
- 3/4" square channel
- Hanging means other than standard butts or offset pivots require special templating and pricing. Consult factory

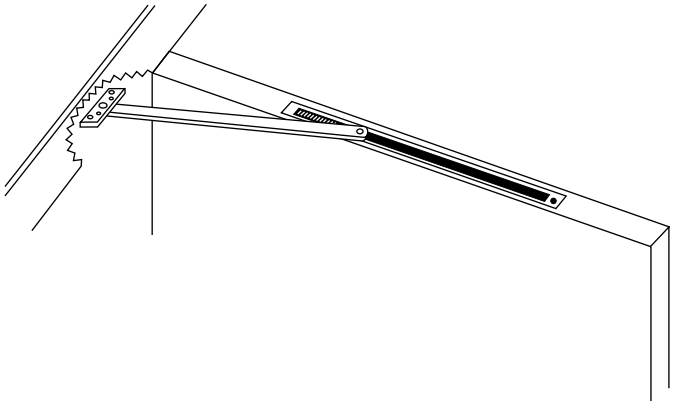

### Door Opening Chart (in inches)

| Butts Offset Pivots | Center Hung Pivots | Model Number | |
|---|---|---|---|
| | | H.O. | Stop |
| *18 - 24 | — | 5-126 | 5-136 |
| 24-1/16 - 30 | 27 - 32 | 5-226 | 5-236 |
| 30-1/16 - 36 | 32-1/16 - 38-1/2 | 5-326 | 5-336 |
| 36-1/16 - 42 | 38-9/16 - 45 | 5-426 | 5-436 |
| 42-1/16 - 48 | 45-1/16 - 48 | 5-526 | 5-536 |

***Butt hung only on this size door. No swing clear hinges.**

| | ANSI No. | |
|---|---|---|
| | H.O. | Stop |
| Shipping Weight 3.5 lbs. | C04512 | C04542 |



Copyright © 2013, Yale Security Inc., an ASSA ABLOY Group company. All rights reserved.
Reproduction in whole or in part without the express written permission of Yale Security Inc. is prohibited.

### Product Description & Features

- Low profile
- Interior or exterior doors
- Doors may be single or double acting
- Non-handed
- Recommended for moderate traffic, medium weight doors
- Low profile concealed channel designed for installation in aluminum storefront doors
- Heavy shock absorber spring provides 5-7° compression before dead stop
- Complete screw kit allows for installation in wood or metal door and frame
- For security areas, Torx® screws optional
- Standard architectural finishes
- Durable slider cam
- 110° maximum opening
- 1-3/4" minimum door thickness
- Channel is 1-1/4" wide by 1/2" deep
- UL listed for fire door assemblies
- Hanging means other than standard butts or offset pivots require special templating and pricing. Consult factory
- Available in stop function only

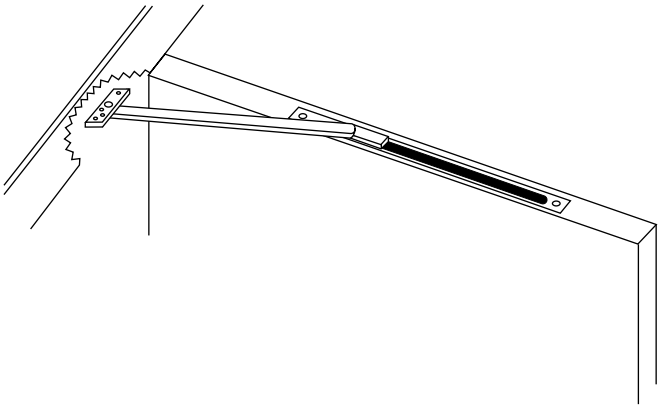

### Chart (in inches)

| Butts Offset Pivots | Center Hung Pivots | Model Number |
|---|---|---|
| Door Opening | | Stop |
| *24 - 28 | — | 6-136 |
| 28-1/16 - 33 | 30 - 36 | 6-236 |
| 33-1/16 - 38 | 36-1/16 - 41 | 6-336 |
| 38-1/16 - 43 | 41-1/16 - 46 | 6-436 |
| 43-1/16 - 48 | 46-1/16 - 50 | 6-536 |

***Butt hung only on this size door. No swing clear hinges.**

| | ANSI No. |
|---|---|
| Shipping Weight 4.5 lbs. | Stop C01541 |



Copyright © 2013, Yale Security Inc., an ASSA ABLOY Group company. All rights reserved.
Reproduction in whole or in part without the express written permission of Yale Security Inc. is prohibited.

**HW-022**
Revision Date:

## 6ADJ SERIES

### Product Description & Features

- Adjustable low profile
- Interior or exterior doors
- Doors may be single or double acting
- Non-handed
- Recommended for moderate traffic, medium weight doors
- Low profile concealed channel design for installation in aluminum doors
- Heavy shock absorber spring provides 5-7° compression before dead stop
- Degree of opening is fully adjustable and can be adapted to changing needs
- Complete screw packet for installation in wood or metal door and frame
- For security areas, Torx® screws available for exposed fasteners
- Standard architectural finishes
- Durable slider cam and shock block
- 110° maximum opening (except 6ADJ for center hung 30-36" door which is 105°)
- 1-3/4" minimum door thickness, for thicker doors consult factory
- Channel is 1-1/4" wide x 1/2" deep
- UL listed for fire door assemblies
- Hanging means other than standard butts or offset pivots require special templating and pricing. Consult factory.
- Available in stop function only

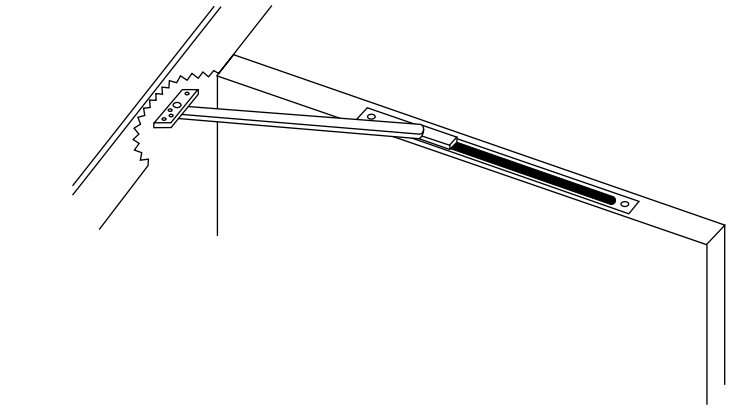

### Chart (in inches)

| Butts Offset Pivots | Center Hung Pivots | Model Number |
|---|---|---|
| | | Stop |
| *24 - 28 | — | 6ADJ-136 |
| 28-1/16 - 33 | 30 - 36 | 6ADJ-236 |
| 33-1/16 - 38 | 36-1/16 - 41 | 6ADJ-336 |
| 38-1/16 - 43 | 41-1/16 - 46 | 6ADJ-436 |
| 43-1/16 - 48 | 46-1/16 - 50 | 6ADJ-536 |

| | ANSI No. |
|---|---|
| | Stop |
| Shipping Weight 4.5 lbs. | C01541 |

***Butt hung only on this size door. No swing clear hinges.**



Copyright © 2013, Yale Security Inc., an ASSA ABLOY Group company. All rights reserved.
Reproduction in whole or in part without the express written permission of Yale Security Inc. is prohibited.

7 SERIES

**HW-022**
Revision Date:

### Product Description & Features

- Industrial duty
- Interior or exterior doors
- Single acting
- Non-handed
- Cantilever design
- Hold open only
- Double spring arm absorbs shock
- Complete screw packet with thru-bolts for door, wood and machine screws for frame
- For security areas, Torx® screws available for exposed fasteners
- Self-lubricating bronze bearings
- Sprayed finishes only
- 110° maximum opening
- Hanging means other than standard butts or offset pivots require special templating and pricing. Consult factory

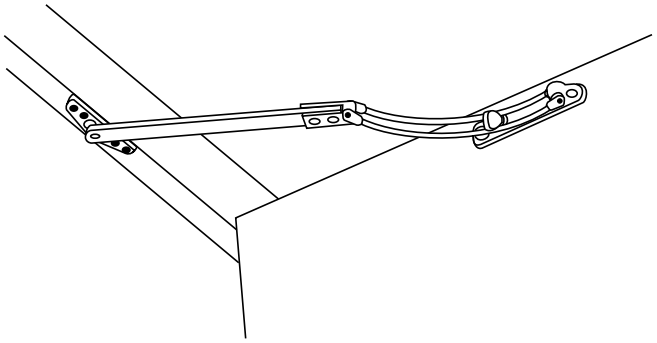

### Door Opening Chart (in inches)

| Butts Offset Pivots | Model Number |
|---|---|
| | Hold Open |
| 24 - 30 | 7-126 |
| 30-1/16 - 34 | 7-226 |
| 34-1/16 - 39 | 7-326 |
| 39-1/16-48 | 7-426 |

| ANSI No. | |
|---|---|
| Shipping Weight 7 lbs. | H.O. |
| | C09551 |



Copyright © 2013, Yale Security Inc., an ASSA ABLOY Group company. All rights reserved.
Reproduction in whole or in part without the express written permission of Yale Security Inc. is prohibited.

**HW-022**
Revision Date:

## 8HD SERIES

### Product Description & Features

- Extra heavy-duty
- Interior or exterior doors
- Single acting doors, push side mounting (only)
- Non-handed
- Double lever design
- Recommended for high traffic, heavy abuse installations
- Extra heavy shock absorber spring provides 6° compression before deadstop
- Available with stop function or thumbturn hold open
- Complete screw packet with thru-bolts for door, wood and machine screws for frame.
- Torx® screws optional for security applications
- Standard architectural finishes
- 110° maximum opening
- 1-3/4" minimum door thickness
- For flush mounting on the push side of the door use angle jamb bracket adapter 5458-LH or 5459-RH
- Cannot be mounted on pull side of door
- Stop function UL listed for fire door assemblies
- Hanging means other than standard butts or offset pivots require special templating and pricing. Consult factory
- Stainless steel base metal only

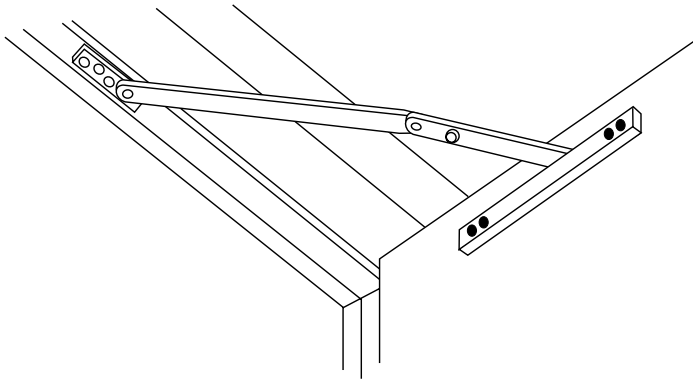

### Door Opening Chart (in inches)

| Butts Offset Pivots | Center Hung Pivots | Model Number | |
|---|---|---|---|
| | | H.O. | Stop |
| 27-1/16 - 32-1/2 | 27-9/16 - 35 | 8-226 | 8-236 |
| 32-9/16 - 38-3/4 | 35-1/16 - 42-1/2 | 8-326 | 8-336 |
| 38-13/16 - 42-1/2 | 41-9/16 - 45 | 8-426 | 8-436 |
| 42-9/16 - 48 | 45-1/16 - 48 | 8-526 | 8-536 |

| | ANSI No. | |
|---|---|---|
| | H.O. | Stop |
| Shipping Weight 4.5 lbs. | C03511 | C03541 |



Copyright © 2013, Yale Security Inc., an ASSA ABLOY Group company. All rights reserved.
Reproduction in whole or in part without the express written permission of Yale Security Inc. is prohibited.

9 SERIES

**HW-022**
Revision Date:

### Product Description & Features

- Heavy-duty
- Interior or exterior doors
- Doors are single acting
- Non-handed
- Slide track design
- Recommended for high traffic, heavy abuse installations
- Heavy shock absorber spring provides 5-7° compression before deadstop
- LS option omits spring for special application
- On/off knob on hold open models
- Stop, friction stay or hold open function
- Complete screw packet with thru-bolts for door, wood and machine screws for frame
- Torx® screws optional for security applications
- Standard architectural finishes
- Durable slider cam and shock block
- 110° maximum opening
- 1-3/4" minimum door thickness
- 1-3/16" square channel
- Stop function UL listed for fire door assemblies
- For pull side mounting or flush mounting on push side or for rabbeted push side use angle jamb bracket adapter 5458-LH or 5459-RH
- Hanging means other than standard butts or offset pivots require special templating and pricing. Consult factory

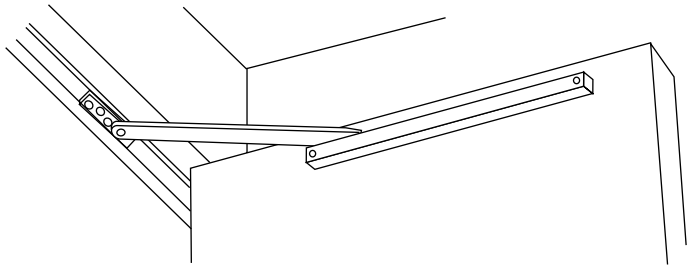

### Door Opening Chart (in inches)

| Butts Offset Pivots | Center Hung Pivots | Model Number | | |
|---|---|---|---|---|
| | | Friction | H.O. | Stop |
| *24 - 28 | 25-1/2 - 30 | 9-116 | 9-126 | 9-136 |
| 28-1/16 - 33 | 30-1/16 - 36 | 9-216 | 9-226 | 9-236 |
| 33-1/16 - 38 | 36-1/16 - 41 | 9-316 | 9-326 | 9-336 |
| 38-1/16 - 43 | 41-1/16 - 46 | 9-416 | 9-426 | 9-436 |
| 43-1/16 - 48 | 46-1/16 - 50 | 9-516 | 9-526 | 9-536 |

| | ANSI No. | | |
|---|---|---|---|
| | Friction | H.O. | Stop |
| Shipping Weight 4.5 lbs. | C02531 | C02511 | C02541 |

***Butt hung only on this size door. No swing clear hinges.**


Copyright © 2013, Yale Security Inc., an ASSA ABLOY Group company. All rights reserved.
Reproduction in whole or in part without the express written permission of Yale Security Inc. is prohibited.

**HW-022**
Revision Date:

## 9ADJ SERIES

### Product Description & Features

- Adjustable, heavy-duty
- Interior or exterior doors
- Doors are single acting
- Non-handed
- Slide track design
- Recommended for high traffic, heavy abuse installations
- Heavy shock absorber spring provides 5-7° compression before dead stop
- Degree of opening is fully adjustable and can be adapted to changing needs
- Complete screw packet with thru-bolts for door, wood and machine screws for the frame
- For security areas, Torx® screws available for exposed fasteners
- Standard architectural finishes
- Durable slider cam and shock block
- 110° maximum opening (except 9ADJ for center hung 30-36" door which is 105°)
- 1-3/4" minimum door thickness, for thicker doors consult factory
- 1-3/16 square channel
- Stop function UL listed for fire doors
- For pull side mounting or flush and rabbeted mounting on push side use angle jamb bracket adapter 5458-LH or 5459-RH
- Hanging means other than standard butts or offset pivots require special templating and pricing. Consult factory

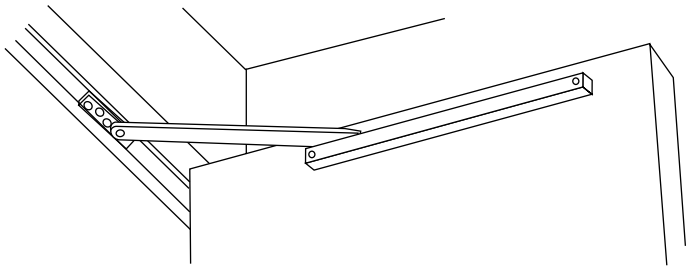

### Door Opening Chart (in inches)

| Butts Offset Pivots | Center Hung Pivots | Model Number | |
|---|---|---|---|
| | | H.O. | Stop |
| *24 - 28 | 25-1/2 - 30 | 9ADJ-126 | 9ADJ-136 |
| 28-1/16 - 33 | 30-1/16 - 36 | 9ADJ-226 | 9ADJ-236 |
| 33-1/16 - 38 | 36-1/16 - 41 | 9ADJ-326 | 9ADJ-336 |
| 38-1/16 - 43 | 41-1/16 - 46 | 9ADJ-426 | 9ADJ-436 |
| 43-1/16 - 48 | 46-1/16 - 50 | 9ADJ-526 | 9ADJ-536 |

***Butt hung only on this size door. No swing clear hinges.**

| | ANSI No. | |
|---|---|---|
| | H.O. | Stop |
| Shipping Weight 4.5 lbs. | C02511 | C02541 |



Copyright © 2013, Yale Security Inc., an ASSA ABLOY Group company. All rights reserved.
Reproduction in whole or in part without the express written permission of Yale Security Inc. is prohibited.

### Product Description & Features

- Adjustable
- Interior doors
- Single acting doors
- Non-handed
- Slide track design
- Recommended for moderate traffic, medium weight doors
- Degree of opening fully adjustable and can be adapted to changing needs
- Heavy shock absorber spring provides compression before deadstop
- Can be ordered specifically as a stop, friction stay, or hold open.
- Multi-function unit is shipped as a stop. Can be converted to a hold open or friction in field. 5012-PKG (**Adapter kit**) included
- Complete screw packet with thru-bolts for door, wood and machine screws for frame
- Torx® screws optional for security applications, but heavy-duty units should be considered for high-security applications
- Standard architectural finishes
- Durable slider cam and shock block
- 110° maximum opening
- 3/4" square channel
- Stop function UL listed for fire door assemblies
- For pull side mounting or flush and rabbeted mounting on push side use angle jamb bracket adapter 5258
- Hanging means other than standard butts or offset pivots require special templating and pricing. Consult factory

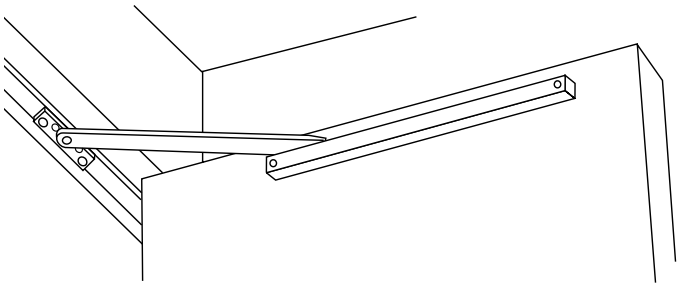

### Door Opening Chart (in inches)

| Butts Offset Pivots | Center Hung Pivots | Model Number | | | |
|---|---|---|---|---|---|
| | | Friction | H.O. | Stop | Multi |
| *18 - 24 | 21 - 26-1/2 | 10-116 | 10-126 | 10-136 | 10-146 |
| 24-1/16 - 30 | 26-9/16 - 32 | 10-216 | 10-226 | 10-236 | 10-246 |
| 30-1/16 - 36 | 32-1/16 - 38 | 10-316 | 10-326 | 10-336 | 10-346 |
| 36-1/16 - 42 | 38-1/16 - 45 | 10-416 | 10-426 | 10-436 | 10-446 |
| 42-1/16 - 48 | 45-1/16 - 48 | 10-516 | 10-526 | 10-536 | 10-546 |

| | ANSI No. | | |
|---|---|---|---|
| | Friction | H.O. | Stop |
| Shipping Weight 3.5 lbs. | C05532 | C05512 | C05542 |

***Butt hung only on this size door. No swing clear hinges.**


Copyright © 2013, Yale Security Inc., an ASSA ABLOY Group company. All rights reserved.
Reproduction in whole or in part without the express written permission of Yale Security Inc. is prohibited.

## 55 SERIES

**HW-022**
Revision Date:

### Product Description & Features

- Standard duty
- Interior doors
- Single acting
- Non-handed
- Slide track design
- Recommended for moderate traffic, medium weight doors
- Degree of opening determined by template. Not field adjustable
- Heavy shock absorber spring provides 5-7° compression before deadstop
- Stop and hold open functions
- Complete screw packet with thru-bolts for door, wood and machine screws for the frame
- Torx® screws optional for security applications, but heavy-duty units should be considered for high-security applications
- Available in 652 and sprayed finishes only
- Durable slide block and shock block
- 110° maximum opening
- 3/4" square channel
- For pull side mounting or flush and rabbeted mounting on push side use angle jamb bracket adapter 5258
- Hanging means other than standard butts or offset pivots require special templating and pricing. Consult factory

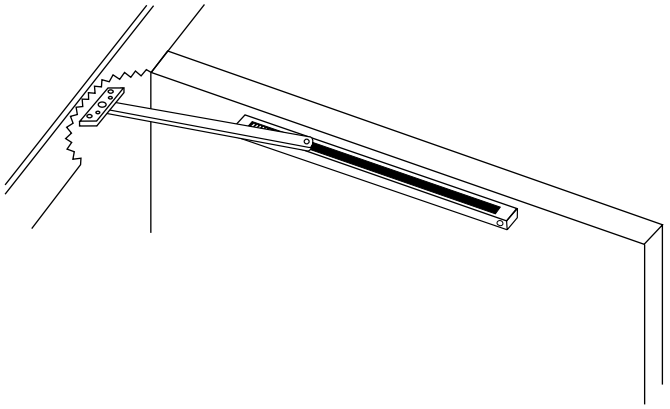

### Door Opening Chart (in inches)

| Butts Offset Pivots | Center Hung Pivots | Model Number | |
|---|---|---|---|
| | | H.O. | Stop |
| *18 - 24 | — | 55-126 | 55-136 |
| 24-1/16 - 30 | 27 - 32 | 55-226 | 55-236 |
| 30-1/16 - 36 | 32-1/16 - 38-1/2 | 55-326 | 55-336 |
| 36-1/16 - 42 | 38-9/16 - 45 | 55-426 | 55-436 |
| 42-1/16 - 48 | 45-1/16 - 48 | 55-526 | 55-536 |

***Butt hung only on this size door. No swing clear hinges.**

| | ANSI No. | |
|---|---|---|
| | H.O. | Stop |
| Shipping Weight 3.5 lbs. | C05512 | C05542 |



Copyright © 2013, Yale Security Inc., an ASSA ABLOY Group company. All rights reserved.
Reproduction in whole or in part without the express written permission of Yale Security Inc. is prohibited.

**HW-022**
Revision Date:

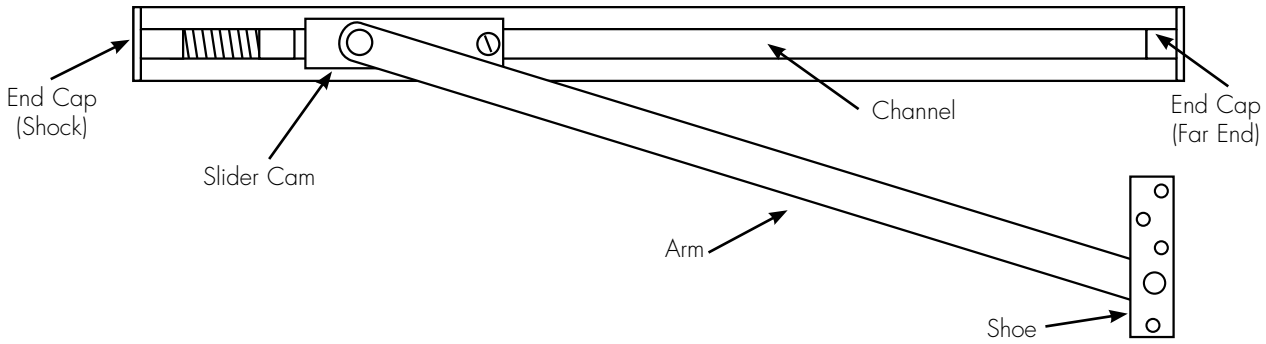


| End Caps #1, 2, 9 & 10 only | | |
|---|---|---|
| #1 & #9 | Shock End Block | 6003 |
| | Far End Block | 6004 |
| #2 & #5 | Far End Block | 5059 (2 req.) |
| #10 | Far End Block | 5011 (2 req.) |
| **Screw Kits** | | |
| #1 | Stop | 6487-* |
| | Hold Open | 6998N* |
| #1ADJ | Stop and Holder | 6487-* |
| #2 | Friction or Stop | 5999-* |
| #6 | Stop | 6487-* |
| #7 | Friction or Stop | 3880-*XXXA |
| #8 | Friction or Stop | 5897-* |
| #9 | Friction or Stop | 6468-* |
| | Hold Open | 6997N* |
| #9ADJ | Stop and Holder | 6468-* |
| #10 & #55 | Friction or Stop | 5998-* |

**Arm Assemblies** (includes arm, shoe and slider cam)
List as noted in charts below.

eg. 1-236 in 630 would be 1-236R in 630
55-426 in 652 would be 55-426R in 652

Components for arm assemblies may not be ordered separately

| 1 | Dash | Size | Function | R | Finish |
|---|---|---|---|---|---|
| 1ADJ | Dash | Size | Function | R | Finish |
| 2 | Dash | Size | Function | R | Finish |
| 5 | Dash | Size | Function | R | Finish |
| 6 | Dash | Size | Function | R | Finish |
| 6ADJ | Dash | Size | Function | R | Finish |
| 9 | Dash | Size | Function | R | Finish |
| 9ADJ | Dash | Size | Function | R | Finish |
| 10 | Dash | Size | Function | R | Finish |
| 55 | Dash | Size | Function | R | Finish |

## Adapter Kits

| 2 | Hold Open, Friction Adapter | 5012-PKG |
|---|---|---|
| 10 | Hold Open, Friction Adapter | 5012-PKG |

*specify finish


Copyright © 2013, Yale Security Inc., an ASSA ABLOY Group company. All rights reserved.
Reproduction in whole or in part without the express written permission of Yale Security Inc. is prohibited.

RIXSON
ASSA ABLOY

**HW-022**
Revision Date:

| 1 **Series** | – | 3 **Door Size Symbol** | 3 **Function Symbol** | 6 **Base Metal Symbol** | x **Options** | 630 **Finish** | McK12HD **Hanging Means** |
|---|---|---|---|---|---|---|---|

**Door Size Symbol**

| | |
|---|---|
| 1 | |
| 2 | |
| 3 | |
| 4 | |
| 5 | |

**Function Symbol**

| | |
|---|---|
| 1 | Friction |
| 2 | Holder |
| 3 | Stop |
| 4 | Mult-func |

**Series**

| | |
|---|---|
| #1 | Hvy Dty Conc |
| #1ADJ | Hvy Dty Conc Adj |
| #2 | Std Dty Conc Adj |
| #5 | Std Dty Conc Non-Adj |
| #6 | Low Profile Conc |
| #6ADJ | Low Profile Conc Adj |
| #7 | Surf Cantilever Hldr |
| #8HD | Extra Hvy Dty Dbl Lever |
| #9 | Hvy Dty Surf |
| #9ADJ | Hvy Dty Surf Adj |
| #10 | Std Dty Surf Adj |
| #55 | Std Dty Surf |

**Options**

| | |
|---|---|
| LS | Less Spring (models 1 & 9 only) |
| 5258 | Standard Duty Bracket |
| 5458 | LH Heavy Duty Bracket |
| 5459 | RH Heavy Duty Bracket |
| Torx | Security Screws |
| R | Arm Only |

**Finish**

| | |
|---|---|
| 689 | Sprayed Alum |
| 690 | Sprayed Dk Brz |
| 691 | Sprayed Lt Brz |
| 696 | Sprayed Brass |
| 605 | Bright Brass |
| 606 | Satin Brass |
| 611 | Bright Bronze |
| 612 | Satin Bronze |
| 613 | Dark Bronze |
| 613E | Dark Oxidized Satin Bronze - equivalent |
| 618 | Bright Nickel |
| 619 | Satin Nickel |
| 622 | Flat Black |
| 629 | Bright Stainless |
| 630 | Stainless Steel |
| 652 | Satin Chrome |



Copyright © 2013, Yale Security Inc., an ASSA ABLOY Group company. All rights reserved.
Reproduction in whole or in part without the express written permission of Yale Security Inc. is prohibited.

# MS1850S Deadbolt

**HW-023**
Revision Date:

## DIMENSIONS

**INCHES**
MILLIMETERS
*Nominal, subject to tolerance extremes.*

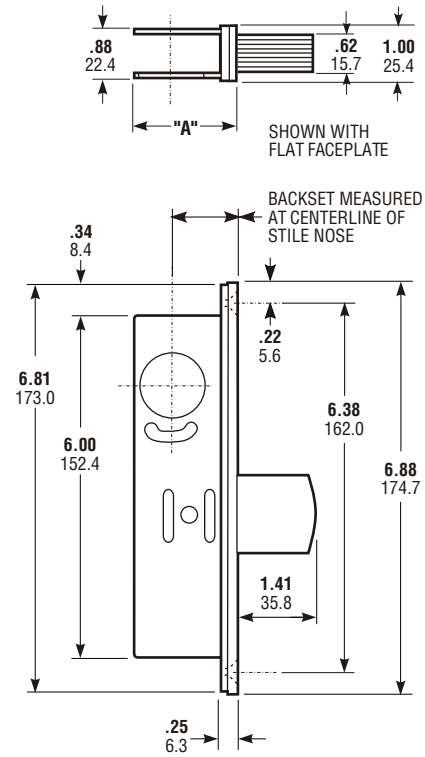


| BACKSET | "A" |
|---|---|
| **31/32"** 24.6 | **1.63** 41.4 |
| **1-1/8"** 28.6 | **1.78** 45.2 |
| **1-1/2"** 38.1 | **2.25** 57.1 |

**ARMORED FACEPLATE**
1" x 6-7/8"

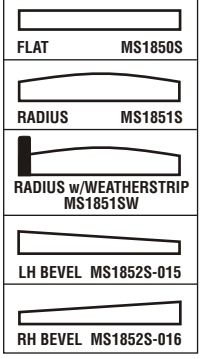


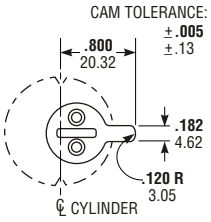


### Cylinder Cam

MS1850S Series locks are operable by any standard 1-5/32" diameter mortise cylinder with special MS® cam dimensioned as shown. Cylinders with MS® cams can be readily obtained from most cylinder manufacturers. See page SW-36 for cylinder make and trim ring information.

## INSTALLATION

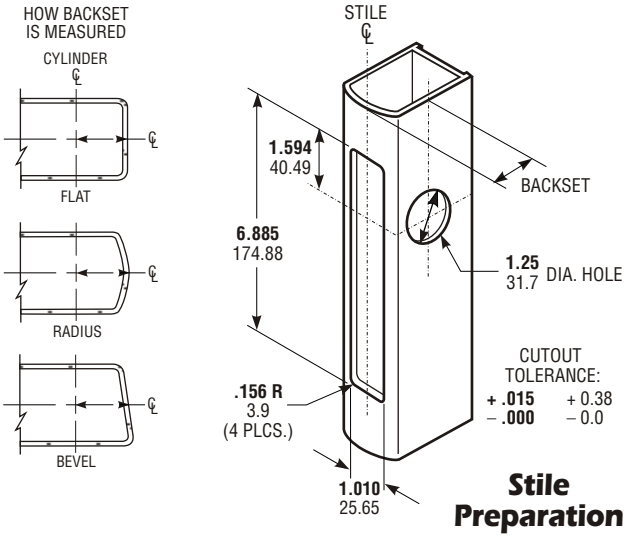


**Stile Preparation**

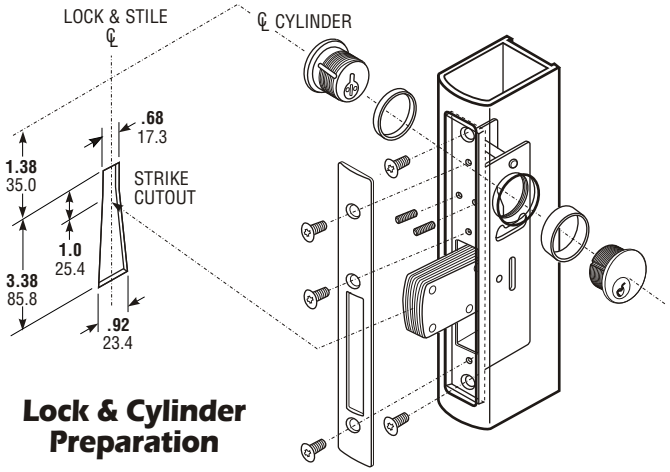


**Lock & Cylinder Preparation**

## HOW TO ORDER

*Specify quantity and the following information.*
*Order related hardware separately.*

**Faceplate Shape**
**1850S** Flat
**1851S** Radius
**1851SW** Radius w/w'strip
**1852S** Bevel

**Backset**
**2** 31/32"
**3** 1-1/8"
**4** 1-1/2"

**Handing**
**15** LH or RHR
**16** RH or LHR
**10** Non-Handed*

**MS 1850S - 2 15 - 628**

**Finish**
**628** Clear Anodized
**313** Dark Bronze Anodized
**335** Black Anodized

*Any flat or radius face, except Schoolhouse.

## OPTIONS

For jambs too narrow to accept the long bolt, the MS1850S-050 offers a shorter bolt with hook shape to provide equal security against door-prying attempts. (See catalog page SL-1.) 1850S-020 short throw without hook also available. Second and third point locking bolts are available for pairs of doors. (See pages SW-11 and SW-12.) All use any make standard mortise cylinder and thus can be keyed into systems with other types of doors. "SCHOOLHOUSE" version, also available, is modified so that operation from inside is "unlock only." This lock is handed and must be specified LH or RH. Specify Series SCH 1850S. Same faceplate and backset options as Series MS1850S. Operation from inside, with standard Adams Rite 4066 Turn seen on page SW-36 or with 4550 Deadbolt Lever (page SW-16). For wood or hollow metal, see MS1850SN.

## STANDARD PACKAGE

Individually boxed with machine screws for mounting. Cylinders and/or thumbturn available at extra cost. Shipping weight: 1-1/2 lbs.

©2009 ADAMS RITE MANUFACTURING CO.

# mortise cylinders

## fixed core for current products

Includes standard, hotel, security and high security for mortise and auxiliary applications. Stock cylinders are furnished 1-1/8" length and 6-pin keyed random. Unless otherwise specified, stock cylinders ordered separately will be provided with cylinder collar 1765.156. If another collar size is required, specify when ordering. Refer to individual product sections for collar applications and sizes.

Mortise cylinders are provided standard with cams to operate Yale® mortise locks, optional cams are available, see page 19.

| Model # | Description | Lengths | | | Cam |
|---|---|---|---|---|---|
| | | 5-Pin | 6-Pin | 7-Pin | |
| [redacted]3 | Standard cylinder | 1" (25) | 1-1/8" (29) 1-1/2" (38)<br>1-1/4" (32) 1-5/8" (41)<br>1-3/8" (35) 1-3/4" (44) | 1-1/4" (32) 1-5/8" (41)<br>1-3/8" (35) 1-3/4" (44)<br>1-1/2" (38) | 2160 |
| 2153S | Standard cylinder for inside operation of 8817-2 and 8834-2 functions only | 1" (25) | 1-1/8" (29) 1-1/2" (38)<br>1-1/4" (32) 1-5/8" (41)<br>1-3/8" (35) 1-3/4" (44) | 1-1/4" (32) 1-5/8" (41)<br>1-3/8" (35) 1-3/4" (44)<br>1-1/2" (38) | 2130 |
| 2123 | Same as 2153 with long lengths for thicker doors | -- | 1-7/8" (48) 2-3/8" (60) 2-7/8" (73) 3-3/8" (86)<br>2" (51) 2-1/2" (64) 3" (76) 3-1/4" (83)<br>2-1/8" (54) 2-5/8" (67) 3-1/8" (79) 3-1/2" (89)<br>2-1/4" (57) 2-3/4" (70) | | 2160 |
| 2123S | Same as 2153S with long lengths for thicker doors | -- | | | 2130 |
| 2719* | Standard cylinder for Hotel/Motel functions 8820, 8827, and 8832 | -- | 1-3/8" (35) | -- | 2160 |
| S2053S | Thumbturn cylinder for inside operation of 8834 function | 1" (25) | 1-1/8" (29) | -- | 2130 |
| S2053 | Thumbturn operated cylinder to replace key operated cylinder | 1" (25) | 1-1/8" (29) | -- | 2160 |
| 1108 | Dummy mortise cylinder | 1" (25) | 1-1/8" (29) 1-1/2" (38)<br>1-1/4" (32) 1-5/8" (41)<br>1-3/8" (35) 1-3/4" (44) | 1-1/4" (32) 1-5/8" (41)<br>1-3/8" (35) 1-3/4" (44)<br>1-1/2" (38) | 2160 |
| 5153 | Security cylinder | -- | 1-1/8" (29) 1-1/4" (32) | 1-1/4" (32) | 2160 |
| 5153S | Security cylinder for inside operation of 8817-2 and 8834-2 functions only | -- | 1-1/8" (29) 1-1/4" (32) | 1-1/4" (32) | 2130 |
| 5719* | Security cylinder for Hotel/Motel functions 8820, 8827, and 8832 | -- | 1-3/8" (35) | -- | 2160 |
| U5153 | High security cylinder | -- | 1-1/8" (29) 1-1/4" (32) | 1-1/4" (32) | 2160 |
| U5719* | High security cylinder for Hotel/Motel functions 8820, 8827, and 8832 | -- | 1-3/8" (35) | -- | 2160 |
| 2553 | Schlage® "C" keyway cylinder 0-bitted or keyed random | -- | 1-1/8" (29) | -- | 2160 |

*Cylinders are 6-pin for master keying expansion purposes. Locksets and housings will be 7-pin in length to accommodate top level master keys. See page 6 for more information.

**Dimensions are shown in inches (millimeters)**

# mortise cylinders

## fixed core for obsolete products

The following fixed core cylinders are available for obsolete Yale® mortise products.

| Model # | Description | Lengths | | | Cam |
|---|---|---|---|---|---|
| | | 5-Pin | 6-Pin | 7-Pin | |
| 1152 | Standard cylinder for obsolete cast iron mortise locks | 1" (25) | 1-1/8" (29) 1-1/2" (38)<br>1-1/4" (32) 1-5/8" (41)<br>1-3/8" (35) 1-3/4" (44) | 1-1/4" (32) 1-5/8" (41)<br>1-3/8" (35) 1-3/4" (44)<br>1-1/2" (38) | 1161 |
| 1719* | Standard cylinder for obsolete Hotel/Motel cast iron locks | -- | 1-3/8" (35) | -- | 1160 |
| 5152 | Security cylinder for obsolete cast iron mortise locks | -- | 1-1/8" (29) 1-1/4" (32) | 1-1/4" (32) | 1161 |
| U5152 | High security cylinder for obsolete cast iron mortise locks | -- | 1-1/8" (29) 1-1/4" (32) | 1-1/4" (32) | 1161 |

*Cylinders are 6-pin for master keying expansion purposes. Locksets and housings will be 7-pin in length to accommodate top level master keys. See page 6 for more information.

## dimensions

**Standard Cylinders**

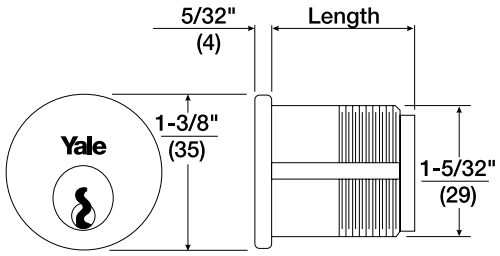


**Thumbturn Cylinders**

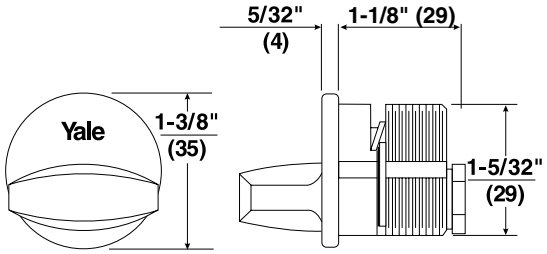


**Security Cylinders**

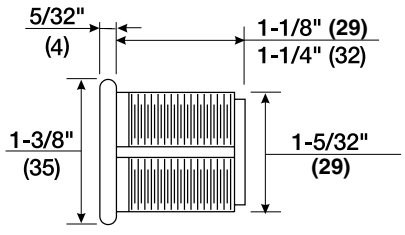


**High Security Cylinders**

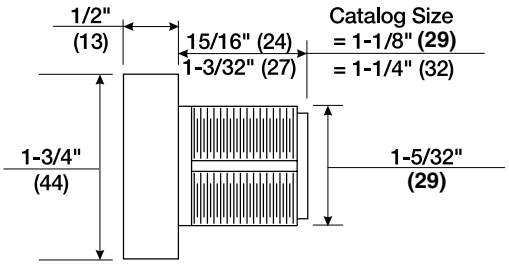


**Dimensions are shown in inches (millimeters)**

## cams

| | Model No. | Description | Application |
|---|---|---|---|
| 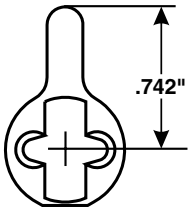 | 2160 | Std for 2123, 2153, S2053, 2719, 5153, U5153, 5719, 2196, 2197, 2196H, 5196, 5197, 5196H | Steel case mortise or auxiliary locks, exit device alarms and cylinder dogging for 7000 series exit devices. |
| 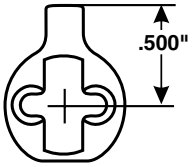 | 2130 | Std for 2123S, 2153S, S2053S, 2196S, 2197S, 5196S, 5197S | Steel case mortise locks, inside operation for 8817-2 and 8834-2 functions. |
| 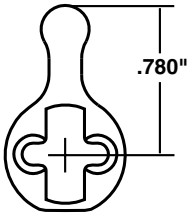 | 1160 | Std for 1153, S1053H, 1719, 5719, U5719 | Obsolete 310 series deadlocks. |
| 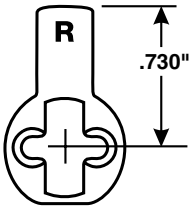 | 1160E | Std for 1194, 1194H, 5194, 5194H | Obsolete cast iron mortise locks. |
| 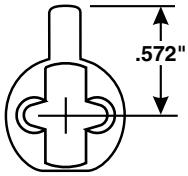 | 1160L | Opt for 1194, 1194H, 5194, 5194H | Adams Rite MS 1800 series locks and 4700 series latches. |
| 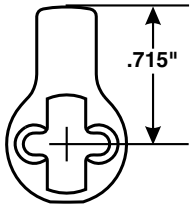 | 1161 | Std for 1123, 1152, S1052H, 5152, U5152 | Obsolete cast iron mortise locks. |

| | Model No. | Description | Application |
|---|---|---|---|
| 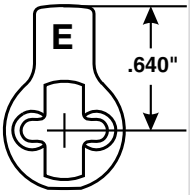 | 1161E | Opt for 1194, Std for 2153 when used for 2100 cylinder dogging | Obsolete cast iron mortise locks, cylinder dogging for 2100 series exit devices. |
| 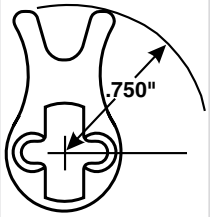 | 1161G | Opt for 1194, 1194H, 5194, 5194H | Keyswitches. |
| 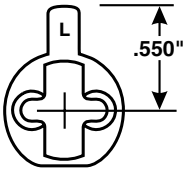 | 1161L | Opt for 1123, 1152, S1052H, 5152, U5152 | Adams Rite MS 1800 series locks and 4700 series latches. |
| 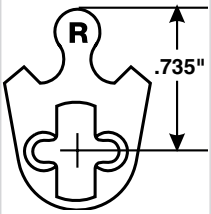 | 1161U | Opt for 1194, 1194H, 5194, 5194H | Corbin Russwin interchangeable core (A01) |
| 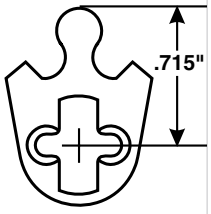 | 1161T | Opt for 1123, 1152, 1186, S1052H, 5152, U5152 | Corbin Russwin fixed core (A01) |
| | 10-6120-9010 | Cam Disc | Filler for hollow mill cams. |

All cams and cam disc illustrated actual size.

ROCKWOOD®

ASSA ABLOY

ASSA ABLO
in door ope

**HW-025**

Revision Date:

# 2842- Automatic Flush Bolt Set

Available Finishes:

- US10BE/613E
- US32D/630
- US26D/626
- US26/625
- US10/612
- US10B/613
- US4/606
- US3/605

## Specifications:

Material: Brass, stainless steel.

Fastener: 20 ea. #8 x 3/4 FH combo screws, 2 ea. #6 - 8 plastic anchors.
NOTE: No plastic anchor required for top only.

Features:
- Non-handed.
- Fully automatic–opening active door retracts top and bottom bolts.
- Low closing force.
- Override feature prevents damage to doors or bolts if bolt heads are blocked from entering strikes.
- Bolt head rods are adjustable up to 1-1/2".
- Thermal lock automatically locks the inactive door under high heat conditions due to fire.
- UL Listed.

Options: Can be used with the No. 570 Dust Proof Strike.

Other: For Metal Doors Fire Rated up to and Including 3 Hours, up to 4'w x 8'h

Size: 1" x 6-3/4"

Weight: 2.4 lbs.

ANSI A156.3: Type 25

Rockwood Manufacturing Company • 300 Main Street • Rockwood, PA 15557
P 800.458.2424 • F 800.922.9212 • info@rockwoodmfg.com • www.rockwoodmfg.com
Copyright © 2008 Rockwood Manufacturing Co. All rights reserved.

## Lever Extension Flush Bolt With Bottom Fire Bolt No. 557 x 19BFB

**Material:** Flush bolt – brass
Bottom fire bolt – stainless steel

**Finishes:** Available in standard architectural finishes (see page 9)

**Fastener:** 7 ea. #8 x 3/4" FH combo screws
4 ea. #8 - 32 x 1/2" FH MS
4 ea. #8 counter sunk washer

**Features:**
- For Fire Rated Plastic & Wood Covered Fire Doors measuring up to 4'w x 9'h rated up to 20 minutes
- 3/4" bolt throw, 3/4" backset; door strength maintained by corner reinforcing plate
- When door is subjected to 230°F the plug and black plastic cover will melt allowing the bolt to project, locking the leaves together
- Bottom fire bolt eliminates need for floor prep
- Oversize fire bolt strike hole allows for slight door misalignment

| No. | Size | Weight |
|---|---|---|
| 557 x 19BFB | Top bolt: 1" x 6 3/4"<br>Bottom bolt: 13/16" dia. | 0.9 lbs. |

## Dust Proof Strike No. 570

**Material:** Brass

**Finishes:** Available in standard architectural finishes (see page 9)

**Fastener:** Adjustment nut
Spanner wrench
2 ea. #8 x 1 OH SMS, 2 ea. plastic anchors
2 ea. #8 - 32 x 3/4" OH MS, 2 ea. lead anchors

**Features:**
- Works with all Rockwood manual and automatic flush bolts
- Removable face plate for use with thresholds
- Adjustable height for carpeted areas

| No. | Size | Weight | ANSI A156.16 |
|---|---|---|---|
| 570 | Face plate: 1 3/8" x 2 7/8"<br>Barrel: 7/8" dia. x 2" depth | 0.4 lbs. | L04021 |

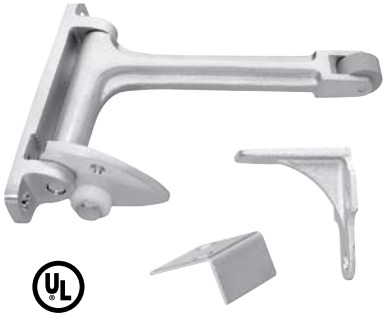

## Gravity Door Coordinator No. 576

**Material:** Cast brass

**Finishes:** Available in standard architectural finishes (see page 9).

**Fastener:** Body: 2 ea. #10 x 1" FH SMS, 2 ea. #10 - 24 x 1" FH MS
Strike: 5 ea. #8 x 1" FH SMS

**Other:**
- For use on door sizes:
  - with Astragal on active door – 18" to 48"
  - with Astragal on inactive door – 18" to 34"
  - with Astragal on both doors – 18" to 30"
- The overlap of the astragal is maximum 7/8" with door hung on standard hinges. Customer must contact the factory for all other astragal situations

**Features:** Non-handed reversible. Prevents the active door from closing until the inactive door is closed

| No. | Size | Projection | Weight | ANSI A156.3 |
|---|---|---|---|---|
| 576 | 1" x 5 7/16" | 7" | 2.2 lbs. | Type 21 |



Copyright © 2012-2015, Rockwood Manufacturing Company, an ASSA ABLOY Group company. All rights reserved
Reproduction in whole or in part without the express written permission of Rockwood Manufacturing Company is prohibited.

# Architectural Door Accessories

ASSA ABLOY

**HW-027**

Revision Date:

The global leader in door opening solutions

## Rockwood RM3302 - MegaTek - Straight Pull - Flat Ends

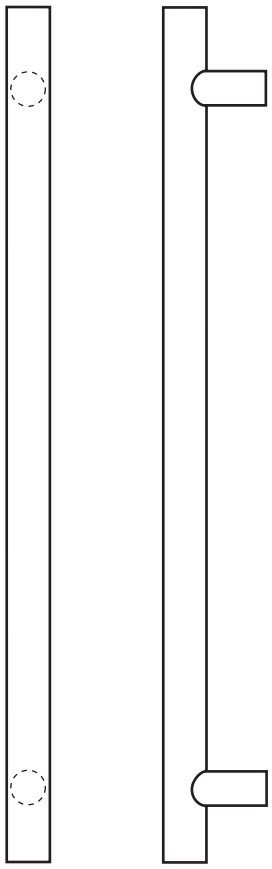

### Available Finishes:

- US3/605
- US4/606
- US10/612
- US10B/613
- US10BE/613E
- US32/629

DIAMETER:
1 1/2"

CTC:
Specify

## Specifications:

MATERIAL:
Aluminum, Brass, Bronze, Stainless Steel

OPTIONS:
For optional mid-post, suffix the product number with "MP" (example: RM3302MP). Over 96" available on select finishes.

ORDERING:
Specify CTC and overall length

300 Main Street
Rockwood, Pennsylvania 15557
P: 800.458.2424 • F: 800.922.9212
www.rockwoodmfg.com • orders.rockwood@assaabloy.com

Copyright © 2017, Rockwood Manufacturing Company, an ASSA ABLOY Group company. All rights reserved. Reproduction in whole or in part without the express written permission of Rockwood Manufacturing Company is prohibited.

# Saddle Thresholds (Cont.)

## 171_

AVAILABLE FINISHES: **A, B, BDG, D, G, SN**
ANSI (aluminum): **J32100, J32130**
ANSI (brass): **J12100, J12130**

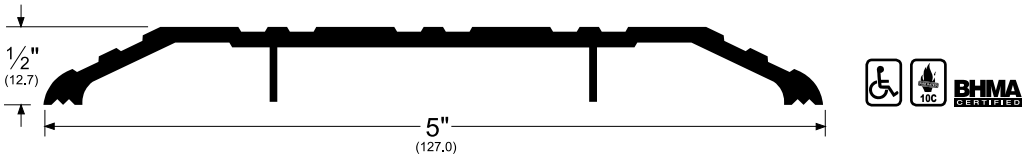


## 172_

AVAILABLE FINISHES: **A, B, D, G**, SN
ANSI (aluminum): **J32100, J32130**
ANSI (brass): **J12100, J12130**

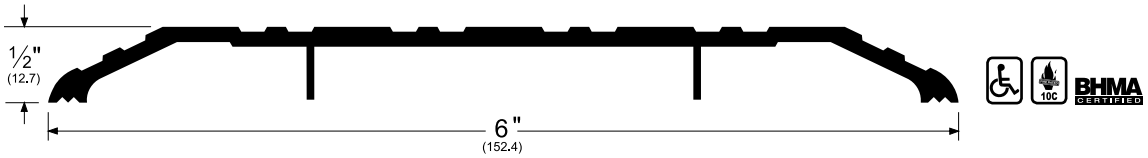


## 176_

AVAILABLE FINISHES: **A, B, D, G**
ANSI (aluminum): **J32100, J32130, J39100, J39130, J39135, J39150**
ANSI (brass): **J12100, J12130, J19100, J19130, J19135, J19150**

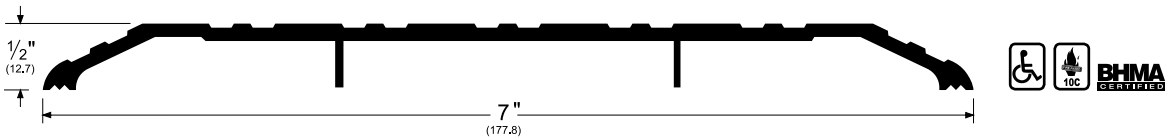


## 2548_

AVAILABLE FINISHES: **A, D, G**
ANSI (aluminum): **J32100, J32130, J39100, J39130, J39135, J39150**

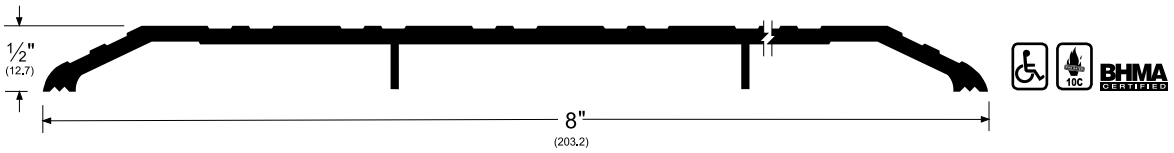


## 254x4_

AVAILABLE FINISH: B
ANSI (brass): **J12100, J12130, J19100, J19130, J19135, J19150**

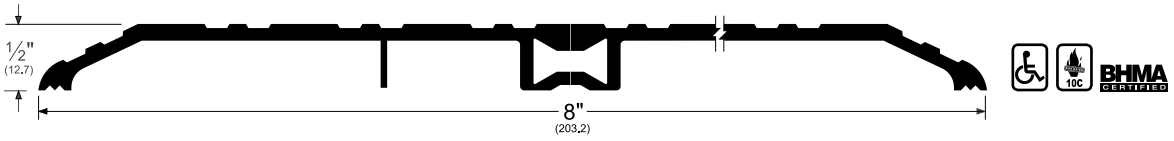


Includes two support legs (only one shown due to break in drawing)

NOTE: Products shown in this section may not be drawn to scale.

AVAILABLE FINISHES FOR PRODUCTS SHOWN ON THIS PAGE (see General Information section for finish chart)
**A** (Mill Finish Aluminum) **B** (Mill Finish Extruded Bronze [Brass]) BDG (Bright Dip Gold Anodized)
**D** (Dark Bronze Anodized) **G** (Gold Anodized) **SN** (Satin Nickel Anodized)

NOTE: **G, SN** are available with limited inventory

Copyright © 2015, Pemko Manufacturing Co., an ASSA ABLOY Group company. All rights reserved.
Reproduction in whole or in part without the express written permission of Pemko Manufacturing Co. is prohibited.

PEMKO

ASSA ABLOY

**BRUSH GASKETING: MEETING STILES**

# 29326_NB (MS)

AVAILABLE FINISHES: **C, D**
WIDTH: **7/8" (22.2 mm)**
WIDTH INCLUDING BRUSH: **1-1/2" (38.1 mm)**
PROFILE HEIGHT: **1/4" (6.4 mm)**

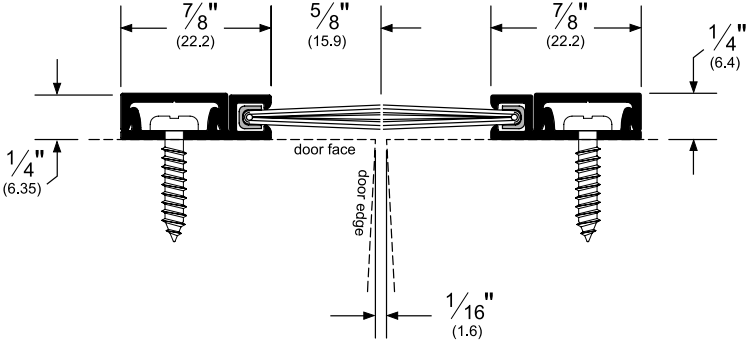


**C** (Clear Anodized Aluminum)
**D** (Dark Bronze Anodized Aluminum)

**HW-029**
Revision Date:

| |
|---|
| **TITLE:** |
| **PREPARED FOR:** |
| **PREPARED BY:** |
| **DATE:** |
| **COMMENTS:** |

Copyright © 2008 Pemko Manufacturing Co. All rights reserved.
Reproduction in whole or in part without the express written permission of Pemko Manufacturing Co. is prohibited.

# MCK-14HD Series

**Recommended for new construction and renovations including new door and frame, new door with existing frame or existing door with new frame. Designed for use on retrofit applications and allows for adjustment in order to properly align the lock edge of the door to the frame.**

- Designed for use with doors which are the standard 1 3/4" up to 2 1/4" thick
- Extruded 6063-T6 aluminum alloy/temper with pinless assembly
- Special hinge reinforcements are not required. Hollow metal door and frame manufacturers' standard is acceptable. Removal of hinge reinforcements in the door and frame is not advised. If hinge reinforcements are left in place, hinge fillers are needed before installation of hinge
- 79", 83", 85", 95" and 120" lengths are standard for nominal door heights
- May be field-cut to exact door heights and also may be ordered in custom lengths. Consult the factory for minimum requirements on custom sizes
- Standard Fasteners are Custom #12-24 x 11/16" FHUC, Type C, self-drilling screws. Wood screws are available upon request
- Designed for use with hollow metal frames, where the inset conforms to S.D.I. specifications for aligning doors and frames
- Available in custom lengths (specify handing and length in inches) and custom finishes (consult factory for availability)
- The Molex connectors or electrically modified hinges are guaranteed for five years

10C

c UL us LISTED DOOR HINGE 76Y2

## MCK-14HD

Short Leaf Inset Application

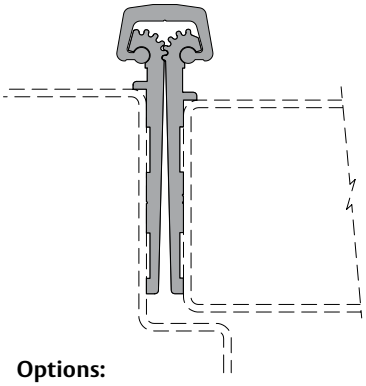

**Finishes**

| Code | Description |
|---|---|
| CL | Clear anodized aluminum |
| BZ | Dark anodized aluminum |
| G | Gold anodized finish |
| BL | Black anodized finish |

| Door Size | Hinge Length |
|---|---|
| 6' 8" | 79" |
| 7' 0" | 83" |
| 7' 2" | 85" |
| 8' 0" | 95" |
| 0' 0" | 20" |

**Options:**

| Code | Description |
|---|---|
| **HT** | Hospital Tip |
| **FP** | Fire Pins |
| **MM** | Magnetic Monitoring |
| **PT** | Power Transfer Prep (cut out only) for Adams Rite, Securitron, Yale, Dorma, Centurion, PEMKO* |
| **EPT** | Power Transfer Prep (cut out only) for Von Duprin, Securitron, PEMKO* |
| **LPT** | Securitron, Adams Rite, PEMKO |

Refer to catalog pages EH-7 for additional information on our electrical options.

* PT, EPT, LPT Location Form must accompany your order.

FULL MORTISE EDGE HUNG INSET DOOR CONTINUOUS GEARED HINGES

ASSA ABLOY

The global leader in door opening solutions

Copyright © 2012, 2015, McKinney Products Company, an ASSA ABLOY Group company. All rights reserved.
Reproduction in whole or in part without the express written permission of McKinney Products Company is prohibited.

# 8800 Rim Exit Device Line

SARGENT manufactures a full line of exit devices providing the best combination of simplicity, strength, durability, aesthetics and innovation. The 8800 series is designed for standard width stile applications on wood and metal doors. This reversible rim exit device sets the industry standard for durability and reliability.

## Features

- Designed for standard width stile applications on wood and metal doors
- Most functions are non-handed
- Single point rim latching device
- Single door & double door applications with mullions
- Quiet operation and solid security
- Devices are ANSI A156.3 - Grade 1
- UL Fire and Panic listed
  Note: Any retrofit or other field modification to a fire rated opening can potentially impact the fire ratings of the opening, and Sargent Manufacturing Company makes no representations or warranties concerning what such impact may be in any specific situation. When retrofitting any portion of an existing fire rated opening, or specifying and installing a new fire-rated opening, please consult with a code specialist or local code official (Authority Having Jurisdiction) to ensure compliance with all applicable codes and ratings.

## Specifications

- Door Types: Wood or metal 1-3/4"(44mm) Thick Door; Over 1-3/4" specify thickness and order as a 31- prefix.
- Door Widths:
  E Rail - 24" to 32" (61cm to 81cm) No cutting required for 32" door;
  F Rail - 33" to 36" (84cm to 91cm) No cutting required for 36" door
  J Rail - 37" to 42" (94cm to 107cm) No cutting required for 42" door;
  G Rail - 43" to 48" (110cm to 122cm) No cutting required for 48" door
- Strike: 649 Standard Black Nylon Coated
- Optional Strikes: 642, 644 and 613
- Dogging Feature: Hex key dogging standard; Cylinder dogging available (16-)
- NEW! - Visual Status Lock/Unlock Indicator (49-) available on 8816 devices only
- 
- Electric Options: AL-Alarm, PL-SARGuide Photoluminescent, TL-SARGuide Illuminated Touchpad, 53-LX latchbolt Monitor, 54-Outside lever monitoring, 55-Request-to-exit Signal-Rail monitoring, 56-ELR remote latch retraction, 57-Delay egress & Electromagnets, 58-Electric Dogging, 59-Electroguard-Self contained Delayed egress
- Mounting Fasteners: Supplied standard with wood and machine screws; Available with through-bolts and mortise (sex) nuts
- Latch Bolt: Stainless steel, 3/4" (19mm) throw
- Device Centerline from Finished Floor: 41" (1041 mm)
- Center Case Dimensions: 8-3/8" (213mm) x 2-5/8" (67mm)
- Projection: Pushbar Neutral – 3" (76 mm); Pushbar Depressed – 2-1/8" (54 mm)

© SARGENT Manufacturing Company, 2017 Phone: 800-727-5477

# 8800 Rim Exit Device Line Components

## Trim

FLW Pull
(10 function shown)

## Finishes

26D: Satin
Chrome Plated
(BHMA 626)

## Functions

04:Key Retracts
Latchbolt, #34
Cylinder Required
and Supplied

© SARGENT Manufacturing Company, 2017 

# mortise cylinders

## fixed core for current products

Includes standard, hotel, security and high security for mortise and auxiliary applications. Stock cylinders are furnished 1-1/8" length and 6-pin keyed random. Unless otherwise specified, stock cylinders ordered separately will be provided with cylinder collar 1765.156. If another collar size is required, specify when ordering. Refer to individual product sections for collar applications and sizes.

Mortise cylinders are provided standard with cams to operate Yale® mortise locks, optional cams are available, see page 19.

| Model # | Description | Lengths | | | Cam |
|---|---|---|---|---|---|
| | | 5-Pin | 6-Pin | 7-Pin | |
| [redacted]3 | Standard cylinder | 1" (25) | 1-1/8" (29) 1-1/2" (38)<br>1-1/4" (32) 1-5/8" (41)<br>1-3/8" (35) 1-3/4" (44) | 1-1/4" (32) 1-5/8" (41)<br>1-3/8" (35) 1-3/4" (44)<br>1-1/2" (38) | 2160 |
| 2153S | Standard cylinder for inside operation of 8817-2 and 8834-2 functions only | 1" (25) | 1-1/8" (29) 1-1/2" (38)<br>1-1/4" (32) 1-5/8" (41)<br>1-3/8" (35) 1-3/4" (44) | 1-1/4" (32) 1-5/8" (41)<br>1-3/8" (35) 1-3/4" (44)<br>1-1/2" (38) | 2130 |
| 2123 | Same as 2153 with long lengths for thicker doors | -- | 1-7/8" (48) 2-3/8" (60) 2-7/8" (73) 3-3/8" (86)<br>2" (51) 2-1/2" (64) 3" (76) 3-1/4" (83)<br>2-1/8" (54) 2-5/8" (67) 3-1/8" (79) 3-1/2" (89)<br>2-1/4" (57) 2-3/4" (70) | | 2160 |
| 2123S | Same as 2153S with long lengths for thicker doors | -- | | | 2130 |
| 2719* | Standard cylinder for Hotel/Motel functions 8820, 8827, and 8832 | -- | 1-3/8" (35) | -- | 2160 |
| S2053S | Thumbturn cylinder for inside operation of 8834 function | 1" (25) | 1-1/8" (29) | -- | 2130 |
| S2053 | Thumbturn operated cylinder to replace key operated cylinder | 1" (25) | 1-1/8" (29) | -- | 2160 |
| 1108 | Dummy mortise cylinder | 1" (25) | 1-1/8" (29) 1-1/2" (38)<br>1-1/4" (32) 1-5/8" (41)<br>1-3/8" (35) 1-3/4" (44) | 1-1/4" (32) 1-5/8" (41)<br>1-3/8" (35) 1-3/4" (44)<br>1-1/2" (38) | 2160 |
| 5153 | Security cylinder | -- | 1-1/8" (29) 1-1/4" (32) | 1-1/4" (32) | 2160 |
| 5153S | Security cylinder for inside operation of 8817-2 and 8834-2 functions only | -- | 1-1/8" (29) 1-1/4" (32) | 1-1/4" (32) | 2130 |
| 5719* | Security cylinder for Hotel/Motel functions 8820, 8827, and 8832 | -- | 1-3/8" (35) | -- | 2160 |
| U5153 | High security cylinder | -- | 1-1/8" (29) 1-1/4" (32) | 1-1/4" (32) | 2160 |
| U5719* | High security cylinder for Hotel/Motel functions 8820, 8827, and 8832 | -- | 1-3/8" (35) | -- | 2160 |
| 2553 | Schlage® "C" keyway cylinder 0-bitted or keyed random | -- | 1-1/8" (29) | -- | 2160 |

*Cylinders are 6-pin for master keying expansion purposes. Locksets and housings will be 7-pin in length to accommodate top level master keys. See page 6 for more information.

**Dimensions are shown in inches (millimeters)**

# mortise cylinders

## fixed core for obsolete products

The following fixed core cylinders are available for obsolete Yale® mortise products.

| Model # | Description | Lengths | | | Cam |
|---|---|---|---|---|---|
| | | 5-Pin | 6-Pin | 7-Pin | |
| 1152 | Standard cylinder for obsolete cast iron mortise locks | 1" (25) | 1-1/8" (29) 1-1/2" (38)<br>1-1/4" (32) 1-5/8" (41)<br>1-3/8" (35) 1-3/4" (44) | 1-1/4" (32) 1-5/8" (41)<br>1-3/8" (35) 1-3/4" (44)<br>1-1/2" (38) | 1161 |
| 1719* | Standard cylinder for obsolete Hotel/Motel cast iron locks | -- | 1-3/8" (35) | -- | 1160 |
| 5152 | Security cylinder for obsolete cast iron mortise locks | -- | 1-1/8" (29) 1-1/4" (32) | 1-1/4" (32) | 1161 |
| U5152 | High security cylinder for obsolete cast iron mortise locks | -- | 1-1/8" (29) 1-1/4" (32) | 1-1/4" (32) | 1161 |

*Cylinders are 6-pin for master keying expansion purposes. Locksets and housings will be 7-pin in length to accommodate top level master keys. See page 6 for more information.

## dimensions

**Standard Cylinders**

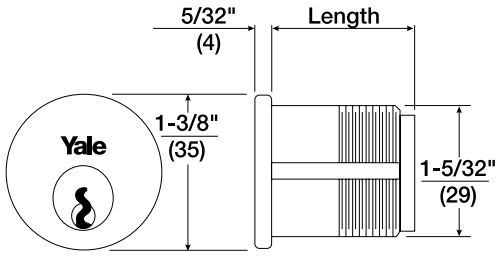


**Thumbturn Cylinders**

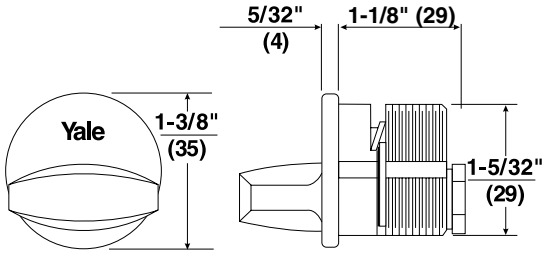


**Security Cylinders**

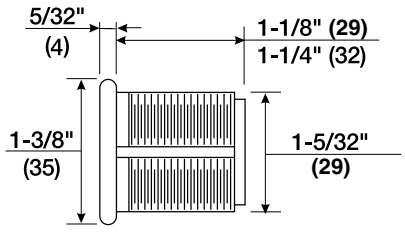


**High Security Cylinders**

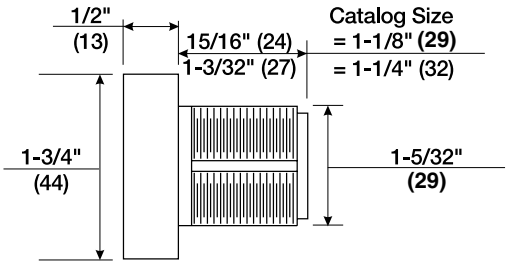


**Dimensions are shown in inches (millimeters)**

## cams

| | Model No. | Description | Application |
|---|---|---|---|
| 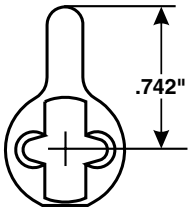 | 2160 | Std for 2123, 2153, S2053, 2719, 5153, U5153, 5719, 2196, 2197, 2196H, 5196, 5197, 5196H | Steel case mortise or auxiliary locks, exit device alarms and cylinder dogging for 7000 series exit devices. |
| 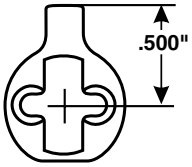 | 2130 | Std for 2123S, 2153S, S2053S, 2196S, 2197S, 5196S, 5197S | Steel case mortise locks, inside operation for 8817-2 and 8834-2 functions. |
| 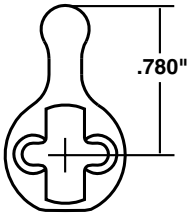 | 1160 | Std for 1153, S1053H, 1719, 5719, U5719 | Obsolete 310 series deadlocks. |
| 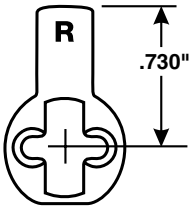 | 1160E | Std for 1194, 1194H, 5194, 5194H | Obsolete cast iron mortise locks. |
| 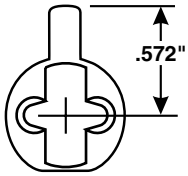 | 1160L | Opt for 1194, 1194H, 5194, 5194H | Adams Rite MS 1800 series locks and 4700 series latches. |
| 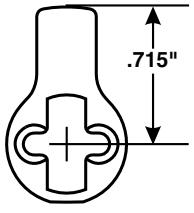 | 1161 | Std for 1123, 1152, S1052H, 5152, U5152 | Obsolete cast iron mortise locks. |

| | Model No. | Description | Application |
|---|---|---|---|
| 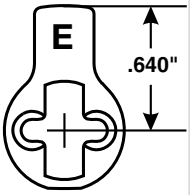 | 1161E | Opt for 1194, Std for 2153 when used for 2100 cylinder dogging | Obsolete cast iron mortise locks, cylinder dogging for 2100 series exit devices. |
| 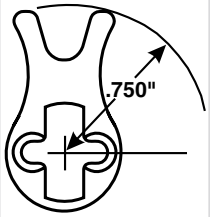 | 1161G | Opt for 1194, 1194H, 5194, 5194H | Keyswitches. |
| 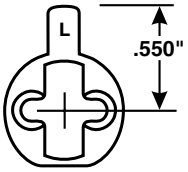 | 1161L | Opt for 1123, 1152, S1052H, 5152, U5152 | Adams Rite MS 1800 series locks and 4700 series latches. |
| 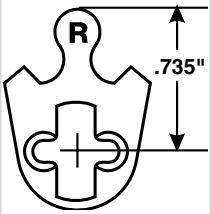 | 1161U | Opt for 1194, 1194H, 5194, 5194H | Corbin Russwin interchangeable core (A01) |
| 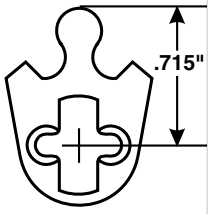 | 1161T | Opt for 1123, 1152, 1186, S1052H, 5152, U5152 | Corbin Russwin fixed core (A01) |
| | 10-6120-9010 | Cam Disc | Filler for hollow mill cams. |

All cams and cam disc illustrated actual size.

**HW-033**
Revision Date:

*Shown with 71 Option*

The 7000 Series is also available in a **Complete One Box Solution**

# 7000 Series

## The **dual, preload solution** for cylindrical latch bolts and rim exit devices

The 7000 Series offers two solutions to address preloaded doors. The in-frame adjustable feature allows the installer to easily adjust the electric strike opening to accommodate the horizontal position of the latchbolt after installation.

The preload release function allows the electric strike to operate smoothly throughout the year under varying loads on the door caused by air-conditioning pressure, changes in the weather, warped doors or doors with weather stripping that often bind standard electric strikes. This unit accommodates cylindrical latchbolts up to 5/8" throw and rim exit latchbolts up to 3/4" throw.

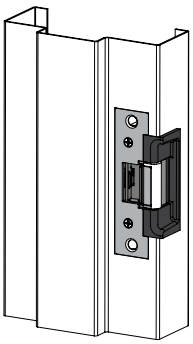

### Specifications

- UL 1034, burglary-resistant listed
- UL 294 (6th Edition) listed
- ANSI BHMA A156.31, Grade 1 (791 and 792 options)
- ANSI/BHMA A156.31, Grade 2 (783S, 786S, and 789S options)
- MEA New York City accepted
- RoHS compliant

### Frame Application

- Metal
- Wood

### Electrical (continuous duty)

- .45 Amps at 12 VDC
- .25 Amps at 24 VDC

## 7000 Models

| | | |
|---|---|---|
| **7000** | Universal electric strike | *Faceplate options ordered separately, see page 31* |
| **7000C*** | Complete electric strike | *Includes the 791 and 792 faceplates* |
| **RF7010** | Integrated Prox | *Includes the strike body, Prox reader and door position switc* |
| **IC7020** | Integrated iCLASS® | *Includes the strike body, iCLASS reader and door position switch* |

**Complete Pac is for cylindrical latchbolt only*

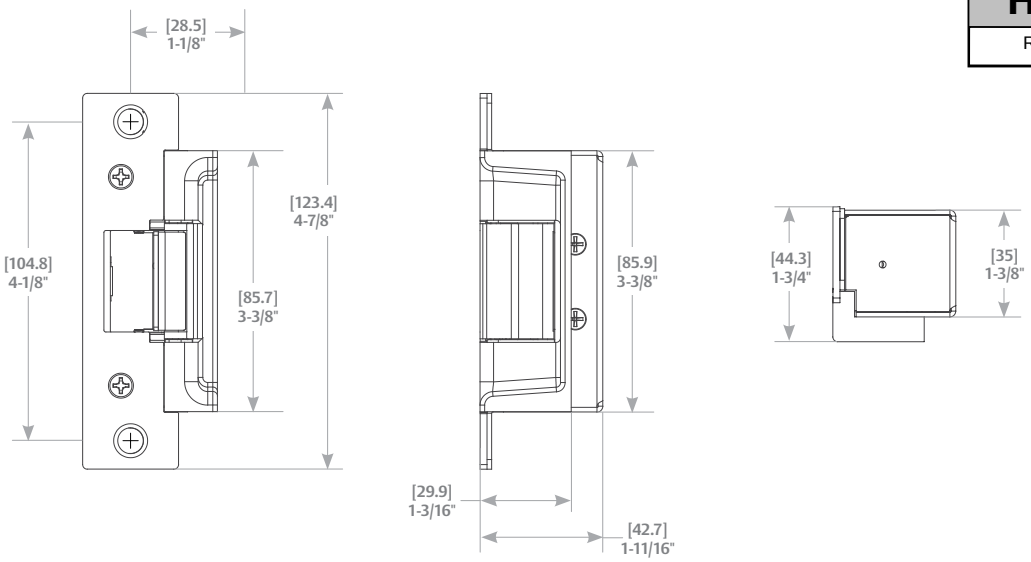


## Standard Features

- Stainless steel construction
- Tamper-resistant
- Static strength 1,500 lbs (791 and 792 options)
- Dynamic strength 70 ft-lbs (791 and 792 options)
- Static strength 1,000 lbs (783S, 786S, and 789S options)
- Dynamic strength 50 ft-lbs (783S, 786S, and 789S options)
- Dual voltage 12 or 24 VDC/VAC
- Endurance 500,000 cycles
- Field selectable fail secure/fail safe
- Accommodates preload (up to 15lbs: fail secure only)
- Horizontal adjustment
- Non-handed
- Internally mounted solenoid
- Strike body depth 1-11/16"
- Plug-in connector
- Trim enhancer (791 and 792 options)
- Pocket adapter (786S and 789S options)
- 3-year limited warranty

## Optional Features

**LBM** » Latchbolt monitor

## Accessories

**SMB** » Surface mounting box (783S and 789S options)

**7000-104** » Lip extension trim adapter

**7000-105** » Trim enhancer (goof plate)

**7000-106** » Keeper pocket adapter

**7000-107** » Full keeper shim pack

**7000-108** » 1/8" spacer plate (783S and 789S options, black finish only)

**7000-110** » Replacement strike plate (791 and 792 option)

**150** » Strike latch guard

**HESCUT-MTK** » Metal template kit

**2001M** » Plug-in bridge rectifier

**2004M** » ElectroLynx® adapter

**2005M3** » SMART Pac® III

**2006M** » Plug-in buzzer

## Finishes
### (791 and 792 options)

**630** » Satin stainless steel

**605** » Bright brass

**606** » Satin brass

**612** » Satin bronze

**613E** » Dark oxidized satin bronze

**629** » Bright stainless steel

**BLK** » Black

**Complete Pacs are only available in the 630 finish*

## Finishes
### (783S, 786S and 789S options)

**613E** » Dark oxidized satin bronze

**630** » Satin stainless steel

DUAL VOLTAGE

CYLINDRICAL LOCKSETS

RIM EXIT DEVICES

FIELD SELECTABLE (FAIL SECURE / FAIL SAFE)

UL 1034 BURGLARY LISTED

hes
ASSA ABLOY



© 2016, Hanchett Entry Systems, Inc., an ASSA ABLOY Group company.

HW-034

Revision Date:

# 8000 SERIES

## Architectural Door Closer

Norton®

ASSA ABLOY

ASSA ABLOY, the global leader in door opening solutions

## OVERVIEW

### Cutaway View

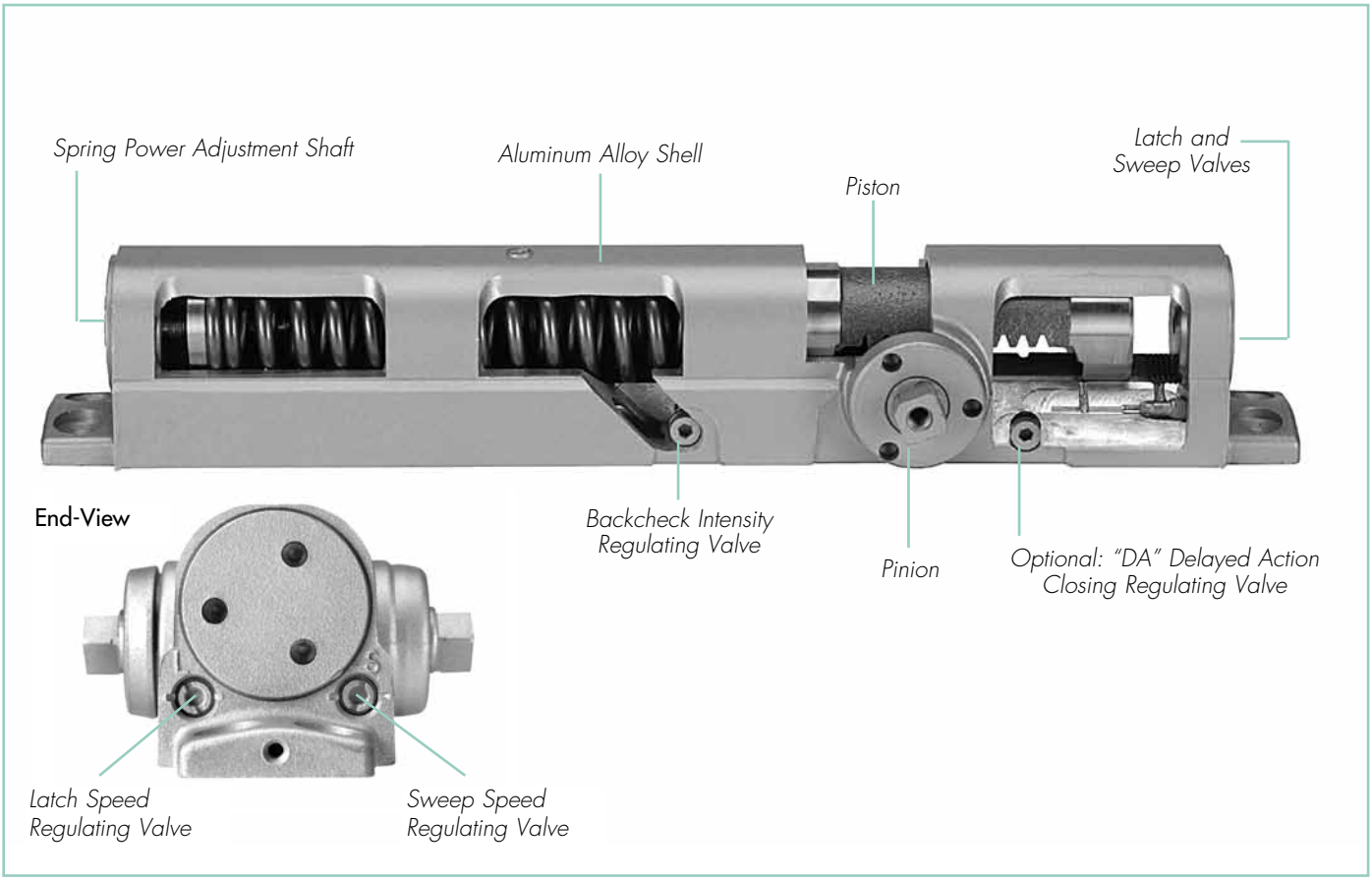


## COMPLIANCE STANDARDS

- ANSI/BHMA A156.4, Grade 1 certified
- UL / cUL listed for use on fire rated doors
- UL10C listed for positive pressure fire test
- 8301 and 8501 door closers are designed to comply with requirements for the Americans with Disabilities Act (A.D.A) and ANSI standard A117.1
- This product is manufactured in an ISO 9001 facility

**CAUTION: Door Closers for Low Opening Force Applications:**
Door closers installed in openings required to meet the requirements of The Americans with Disabilities Act or ANSI/BHMA Standard A117.1, when adjusted to meet those requirements, may not provide adequate closing power to dependably close and latch the door.


Copyright © 2002-2016 Yale Security Inc., an ASSA ABLOY Group company. All rights reserved.
Reproduction in whole or in part without the express written permission of Yale Security Inc. is prohibited.

## HOW TO ORDER

**HW-034**
Revision Date:

For optimum protection of door and frame assemblies, always use auxiliary wall, floor, or overhead door stop.

**Prefixes**

**8**
**First Digit**
Defines Closer Series

**3**
**Second Digit**
Specifies Cover Option

**Appearance Options**
1- without cover
3- closer with Slim Line cover
5- closer with Full cover

**0**
**Third Digit**
Specifies Type

**1**
**Fourth Digit**
Specifies Closer Size

1 - Full Power Range Closer adjustable sizes 1 through 6 (also adjustable to comply with Accessibility Code Closer Requirements)

**H**
**Suffix**

**No Prefix** } 8301/8501 series designates Tri-Style®

S - 8301/8501 regular arm application only, non-hold open
JS - 8301/8501 top jamb application only, non-hold open
P - 8301/8501 parallel arm application only, non-hold open 8381/8581 low profile closer
J - Top Jamb installation. 2-3/4 to 7" reveal - 150° swing
PR - Parallel rigid arm (parallel arm only - specify hand for hold open functions)
PRO - Parallel rigid arm with offset soffit plate (parallel arm only - specify hand for hold open applications)
PS - For push side mounted slide track only
R - Regular rigid heavy-duty arm (Torx® screws not included)
CLP - CloserPlus® arm (parallel arm only)
CPS - CloserPlus Spring™ arm (parallel arm only)
UNI - Unitrol® arm (parallel arm only - specify door width)
UNIJ - *Unitrol* arm (top jamb only - specify frame reveal)

0 - Specifies standard type arms for non-hold open, hold open closers
4 - Specifies low profile slide track
8 - Specifies a low profile arm for non-hold open closers only

**No Suffixes** - Standard non-hold open arm
H - Standard hold open arm
M - Metal cover; optional for series 8501 closers only (Specify hand for Top Jamb closer)
MLL - Lead lined metal cover
A - Optional Architectural Plastic cover (8501 only)
MA - Optional Architectural Metal cover (8501 only)
T - Thumbturn hold open on *CloserPlus* (CLP) & *CloserPlus Spring* (CPS) arms
DA - Adjustable delayed action closing optional. Available with adjustable backcheck cushioning for all series
ST - Slide track single lever arm (pull side standard. For push side prefix PS)
DE - Pull side slide track arm for double egress frame with reveal (Handed)
G - ABS cover
R - Ramp hold open on CloserPlus® arm

Notes:
- Warranty becomes void if door closer is installed on the exterior side of a door in the exterior wall of a building.
- It is strongly recommended, and required on fire door assemblies, that doors having a door closer be hung on ball bearing or anti-friction hinges or pivots; unless an alternate method is identified in the door manufacturer's listing.
- Failure to use the correct type and size fasteners may void factory warranty.
- Fasteners for fire/smoke door assemblies must conform to NFPA 80. In some applications additional fasteners may be mandated by NFPA 80 that are not shipped with standard *Norton* product, such as sleeve-nuts/sex nuts or through-bolts and grommet nuts.
- Sizing charts provided on pages 13-25 are based on 1-3/4" (44mm) x 7' (2.13m) standard weight doors swinging to 110°. Other conditions (such as door height or weight; or wind/draft conditions) may require a larger size closer.


Copyright © 2002-2016 Yale Security Inc., an ASSA ABLOY Group company. All rights reserved.
Reproduction in whole or in part without the express written permission of Yale Security Inc. is prohibited.

## FEATURES

**Aluminum Alloy Housing**
Closer bodies are constructed of a special aluminum alloy, carefully selected to accommodate interactive steel components and operating conditions.

**Rack & Pinion Operation**
Provides a smooth constant control of the door through its full opening and closing cycle. 180° door swing can be achieved when door, frame, hardware and arm function do not interfere.

**Non-handed**
With few exceptions all series 8301/8501 door closers are non-handed and can be installed on either right- or left-hand swing doors. Pinion shaft extends vertically through the closer body in both directions. Some options, as noted on pages 6-7, will require that the hand of the closer be specified.

**Sweep Speed Control Valve**
Allows adjustment of door speed from the door's full open position down to approximately 10° from the closed position.

**Latch Speed Control Valve**
Allows adjustment of door speed from approximately 10° down to the door's fully closed position.

**Tri-Style®**
8301/8501 comes with screws, brackets and soffit plates to allow for regular, top jamb, and parallel arm installations.

**Adjustable Backcheck Valve**
Provides control of the door in the opening cycle, beginning at approximately 75° of door opening. It cushions the door opening when the door is forcibly opened beyond its pre-adjusted limits.

**Standard Molded Covers**
Molded of high-impact U.L. listed material. These covers are non-handed for all applications.

**Warranty**
Limited 25-year warranty for defects and life of the building on the aluminum housing.

**Closer Fluid**
NorGlide® closer fluid is a specially formulated multi-viscosity hydraulic fluid that contains lubricity and anti-oxidation agents that provide optimum performance and efficiency. This fluid complements the interaction of the door closer's aluminum housing with its steel and brass components, while maintaining stable viscosity to allow the door closer to perform in temperatures ranging from extremely high to as low as -40° F.

**Door Closer Power Options**

**Series 8301/8501 Multi-Sized Door Closer**
Adjustable through the power range of sizes 1 through 6; as outlined in ANSI/BHMA specification A156.4 option PT 4H.

Closers will also comply with the opening force requirements as outlined in the Americans with Disabilities Act (ADA) and ANSI/BHMA standard A117.1 for interior doors.

## OPTIONAL FEATURES COVERS

**Optional Metal Cover**
This steel cover is non-handed for regular and parallel arm applications, but is handed for top jamb applications. Cover is available in sprayed or plated finishes.

**Optional Architectural Covers ***

**Plastic** Architectural plastic covers are molded of high-impact U.L. listed material. They are non-handed and available in sprayed finishes.

**Metal** The architectural metal covers are steel and non-handed for all applications. These covers are available in sprayed or plated finishes.

**Optional ABS Cover**
Consult factory for details


Copyright © 2002-2016 Yale Security Inc., an ASSA ABLOY Group company. All rights reserved.
Reproduction in whole or in part without the express written permission of Yale Security Inc. is prohibited.

## OPTIONAL FEATURES

### Adjustable Delayed Action Closing

An optional hydraulic feature that adds a third speed range to the closing cycle. This feature becomes effective when the door is opened and released at any point beyond 70°. The amount of time delay depends upon the combination of the angle of door release and valve adjustment. The valve can be adjusted with a 1/8" (3mm) hex key from no delay time up to maximum delay times of:

| Door Opened | Approximate Time of Delay Cycle |
|---|---|
| 180° | 4-5 minutes |
| 120° | 2-3 minutes |
| 90° | 25-30 seconds |

### Pressure Relief Safety Valve

The delayed action hydraulic system contains a pressure relief valve. Any time the door is forced toward the closed direction while it is in the closing cycle, the valve will open and permit the door to close. This prevents damage to door, frame and closer.

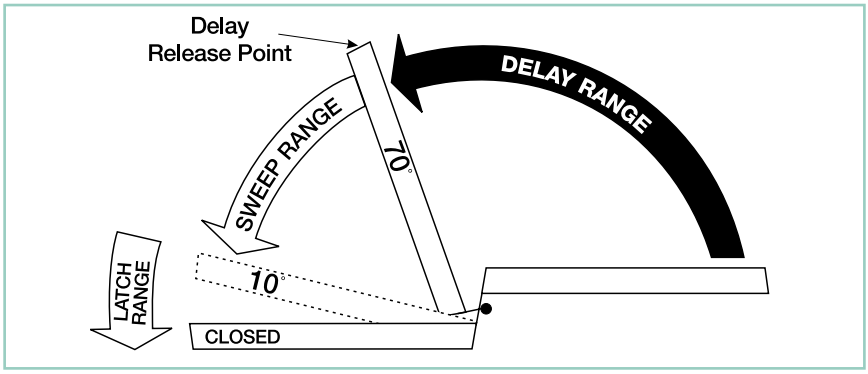


### Suggested Applications

Delayed Action closing allows slow-moving traffic to clear the opening before the door closer's normal closing cycle begins. This feature can be helpful in health care facilities such as hospitals and nursing homes. It provides sufficient time for persons on crutches or in wheelchairs to pass through a door without concern of it closing. At the same time, it can accommodate the facility's staff with movement of food service carts, beds, and other wheeled traffic.

Use of delayed action closers on many doors throughout industrial and commercial buildings can also assist the flow of traffic. Locations where additional time to clear the opening is advantageous are doors between office and factory/warehouse facilities, doors to workshops or laboratories, to kitchen and food processing areas, etc.

## OPTIONAL FEATURES ARMS

### Non-Hold Open

Self-closes door every time door is opened. Auxiliary stop (by others) required except when using the CloserPlus®, CloserPlus Spring™ or Unitrol® arms.

### Hold Open

Achieved by means of friction or ball and detent/ roller. Friction hold open has a range of 90° to 180° using template location and mechanical adjustment.

Ball and detent or roller hold open is effective in a range of 85° to 110°.

Hold open arm door closers are not permitted to be used on fire door assemblies.

### Door Opening Degrees

| Arm Function | Regular Arm, Top Jamb Parallel Arm | Parallel Rigid Arm | CloserPlus® Parallel Arm | CloserPlus Spring™ Parallel Arm | Unitrol® Parallel Arm | *Unitrol* Top Jamb | Low Profile Regular, Parallel | Slide Track |
|---|---|---|---|---|---|---|---|---|
| Non-Hold Open | ✓ | ✓ | 85° to 110° | 85° to 110° | 85° to 110° | 85° to 110° | ✓ | 85° to 110°/180° |
| Hold Open | 90° to 180° | 85° to 180° | 85° to 110° | 85° to 110° | 85° to 110° | 85° to 110° | N/A | 85° to 110° |

✓=180° trim and template permitting



Copyright © 2002-2016 Yale Security Inc., an ASSA ABLOY Group company. All rights reserved.
Reproduction in whole or in part without the express written permission of Yale Security Inc. is prohibited.

## APPLICATIONS

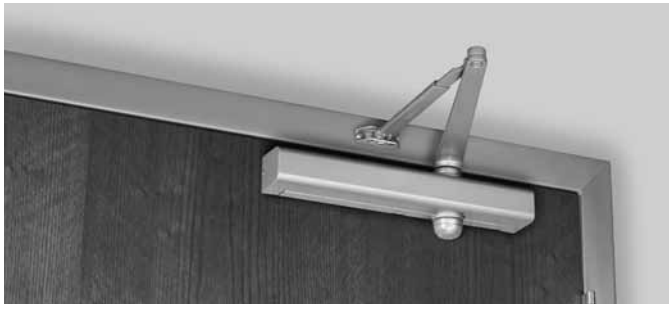

8301 - slim cover

### Regular Arm

This is the only pull-side application where a double lever arm is used. It is the most power-efficient application for a door closer. Sufficient frame, door and/or ceiling clearance must be considered.

8501 - full cover

Since the arm assembly projects directly out from the frame, this application may present an aesthetics issue or be prone to vandalism.

### Top Jamb

For efficiency reasons this application provides the best alternative to the regular arm application. There must be sufficient frame face and/or ceiling clearance for this application. It requires a top rail on the door of just 2-1/4" (57mm). This application provides the best door control for doors in exterior walls that swing out of a building.

The entire door closer and arm assembly project from the frame, similar to the regular arm application, where matters of appearance and malicious abuse can be of concern. Consideration must be given to depth of frame reveal.

### Parallel Arm

This application provides the most appealing design appearance for a surface-mounted door closer having a double lever arm. This also makes it beneficial in vandalism-prone areas. It is on the push side of the door and the arm assembly extends almost parallel to the door. In the closed position, there is very little or no hardware projecting beyond the frame face in most situations.

Due to the geometry of the arm it is approximately 25% less power efficient than a regular arm application. The entire closer and arm assembly are mounted below the frame stop. Top rail clearance dimensions will vary based on the type of cover used. (See pg.15)



Copyright © 2002-2016 Yale Security Inc., an ASSA ABLOY Group company. All rights reserved.
Reproduction in whole or in part without the express written permission of Yale Security Inc. is prohibited.

## APPLICATIONS

Non-hold open arm shown

### Parallel Rigid Arm

An enhanced variation of the standard parallel arm assembly that is intended for use in heavy traffic areas where auxiliary door stops are installed.

Hold open available - specify hand when ordering.

Non-hold open arm shown

### CloserPlus® Arm

Similar to the Parallel Rigid arm, this arm incorporates a stop at the arm's soffit plate to dead stop the door at a predetermined degree of door swing between 85° and 110°, in 5° increments. Prior to dead stop the door closer's backcheck feature slows the door speed to reduce the impact of the stop action.

The *CloserPlus* Arm is intended for use where an auxiliary door stop cannot be utilized and no more than moderate abuse is anticipated. Where more extreme conditions are expected, use of a *Unitrol* arm is recommended.

Available with or without hold open. (Hold open strength is adjustable.)

Non-hold open arm shown

### CloserPlus Spring™ Arm

This arm has all the characteristics of the *CloserPlus* arm with an additional steel buffer spring that provides greater protection at the end of the door opening cycle.

For extreme conditions, use of a *Unitrol* arm is recommended. Available with or without hold open.

### CloserPlus Ramp™

The CLP-R uses a patent pending ramp and plunger design that easily slides into place reducing wear often seen on traditional hold open arms. Ideal for applications where the door will constantly be pulled out of hold open.



Copyright © 2002-2016 Yale Security Inc., an ASSA ABLOY Group company. All rights reserved.
Reproduction in whole or in part without the express written permission of Yale Security Inc. is prohibited.

## APPLICATIONS

### Regular Rigid Arm
This double lever arm features a non-adjustable secondary arm. Orbitally riveted joints prevent tampering or disassembly. Prefix "R" to model number. Available non-hold open only.

### Parallel Rigid Offset Arm
This heavy-duty parallel rigid arm provides additional vertical clearance. It is well suited for applications where weather-stripping or other hardware prevents the use of the standard Parallel Rigid (PR) soffit plate. The non-hold open and hold arms allow 1-1/4" clearance. When used in conjunction with a #6891 spacer block, the PRO arm provides 1-7/8" clearance to accommodate the use of a surface overhead stop/holder.

Parallel

Top Jamb

### Unitrol® Arm
Can be used for either parallel arm or top jamb applications. *Unitrol* arms combine the features of a double lever arm overhead door stop/holder with the backcheck feature of the door closer to reduce door stopping shock loads to a minimum. The *Unitrol* uses a compression spring buffer at the soffit plate/arm shoe that will absorb 30 lbf. of force, 5° prior to the door's dead stop. Coupled with the door closer's backcheck feature, this arm provides the most controlled stop available with a surface door closer. For parallel arm applications there are three different length arm assemblies. Each length is designed for a specific range of door widths, to provide precise door control. This further lessens the dead stop impact on the door's hinges/pivots.


Copyright © 2002-2016 Yale Security Inc., an ASSA ABLOY Group company. All rights reserved.
Reproduction in whole or in part without the express written permission of Yale Security Inc. is prohibited.

## APPLICATIONS

Pull Side

Low Profile Pull Side

Push Side

Low Profile Push Side

**Slide Track**
Whether pull- or push-side mounted, slide track provides the designer with the smoothest lines available in a surface- mounted door closer. The single lever arm allows components to be located in a stack configuration to minimize projection and eliminate obtrusive arm angles. The arm geometry reduces door closer power efficiency by approximately 25% from that of a regular arm.

**Standard unit:**

- Adjustable85°- 110° (hold open and non-hold open). Track is supplied with a spring buffered stop. An auxiliary stop, by others, is recommended.
- Specify if hold open unit is required.
- 180° swing (non-hold open, pull side only) is also available. This track assembly requires that a door stop, by others, be supplied to stop the door.

Regular Arm

Parallel Arm

**Regular Arm:** Allows closer to be installed where there is as little as 1" (25mm) of frame face or ceiling clearance.

**Parallel Arm:** Allows closer to be installed 1/2" (13mm) higher up on door than standard parallel arm application.

**Low Profile Arm**
Supplied with 8381/8581 series door closers for non-hold open installations only. Low profile arms have a reduced height elbow joint and a straight main arm. This enables the door closer to be installed in less vertical space.

**Note:** Low profile arm door closers are not supplied with Tri-Style® packaging.


Copyright © 2002-2016 Yale Security Inc., an ASSA ABLOY Group company. All rights reserved.
Reproduction in whole or in part without the express written permission of Yale Security Inc. is prohibited.

## REGULAR ARM

### Closer Mounting Plates
### Slim Line Installations

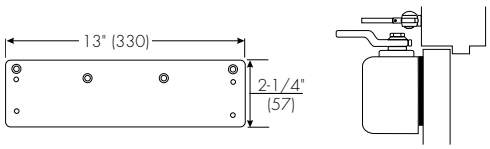


**Narrow Top Rail - #8146 Drop Plate:** For use where the narrow top rail of the door prevents the closer from being mounted directly on to the door surface. This drop plate must be used for any Series 8000 closer mounted on a top rail between 1-9/16" and 2-7/16" (40 and 62mm) in height, or any Series 8080 closer mounted on a top rail between 1-7/16" and 2-5/16" (36 and 59mm) in height.

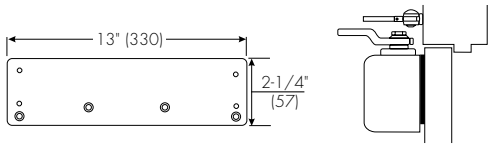


**Concealed Door Holder - #8146 Drop Plate:** For use where a concealed door holder prevents normal mounting of the closer to the door. This is the same plate used for narrow rail mounting, but is inverted for this application to permit the mounting screws to clear the bottom of the door-holder preparation in the top rail of the door. This places the centerline of the plate's upper mounting screws at 2-3/16" (56mm) from the top of the door.

### Full Cover Installations

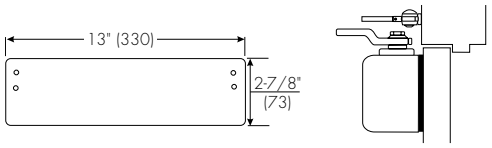


**Exposed Back - #8445 Molded Full Cover Decorative Back Plate:** For use on doors with glass lights where a closer with a molded full cover is installed and the closer back is exposed. This plate covers the back of the installation to give a pleasing appearance from the reverse side.

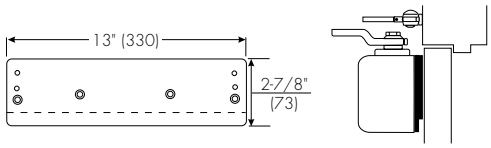


**Exposed Back/Narrow Top Rail - Exposed Back Concealed Door Holder - #8446 Molded Full Cover Drop Plate Kit:** For use with molded full cover installation when an 8146 Plate is needed as a drop plate on a narrow top rail, or as a clearance plate for a concealed door holder, and the closer back is exposed. Kit contains an 8146 Drop Plate and an 8445 Decorative Plate.

### Metal Cover Installations

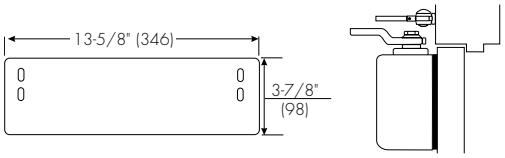


**Exposed Back - #8545 Metal Cover Decorative Back Plate:** For use on doors with glass lights where a closer with a metal full cover is installed and the closer back is exposed. This plate covers the back of the installation to give a pleasing appearance from the reverse side.

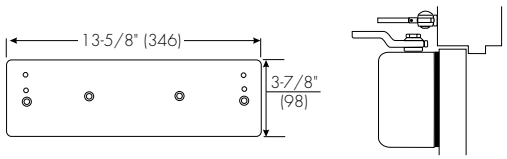


**Concealed Door Holder - #8546 Metal Cover Drop Plate:** For use where a concealed door holder prevents the normal mounting of the closer to the door. This plate permits the mounting screws to clear the bottom of the door-holder preparation in the top rail of the door. This places the centerline of the plate's upper mounting screws at 2-3/16" (56mm) from the top of the door.

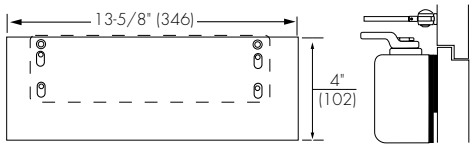


**Exposed Back/Narrow Top Rail - #8549 Metal Cover Drop Plate Kit:** For use with metal full cover installations, when an 8146 Plate is needed as a drop plate on a narrow top rail and the closer back is exposed. Kit contains an 8146 Drop Plate and an 8545 Decorative Plate.



Copyright © 2002-2016 Yale Security Inc., an ASSA ABLOY Group company. All rights reserved.
Reproduction in whole or in part without the express written permission of Yale Security Inc. is prohibited.

## Closer Mounting Plates
## Architectural Plastic or Metal Cover Installations

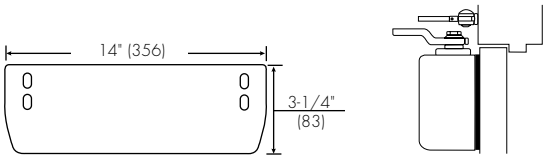


**Exposed Back - #8545A Architectural Plastic or Architectural Metal Cover Decorative Back Plate:** For use on doors with glass lights where a closer with an architectural plastic or metal cover is installed and the closer back is exposed. This plate covers the back of the installation to give a pleasing appearance from the reverse side.

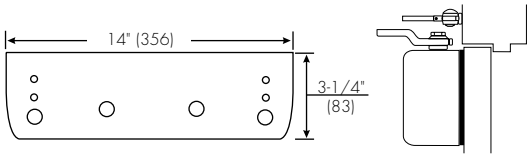


**Concealed Door Holder - #8546A Architectural Plastic or Architectural Metal Cover Drop Plate:** For use where a concealed door holder prevents the normal mounting of the closer to the door. This plate permits the mounting screws to clear the bottom of door-holder preparation in the top rail of the door. This places the centerline of the plate's upper mounting screws at 2-3/16" (56mm) from the top of the door.

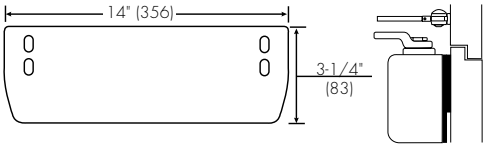


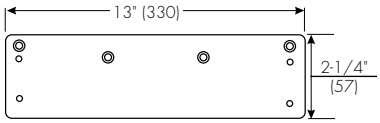


**Exposed Back/Narrow Top Rail - #8549A Architectural Plastic or Architectural Metal Cover Drop Plate Kit:** For use with architectural plastic or metal cover installations when an 8146 plate is needed as a drop plate on a narrow top rail and the closer back is exposed. Kit contains an 8146 Drop Plate and an 8545A Decorative Plate.


Copyright © 2002-2016 Yale Security Inc., an ASSA ABLOY Group company. All rights reserved.
Reproduction in whole or in part without the express written permission of Yale Security Inc. is prohibited.

## REGULAR ARM

### Brackets for Non-Hold Open Arms

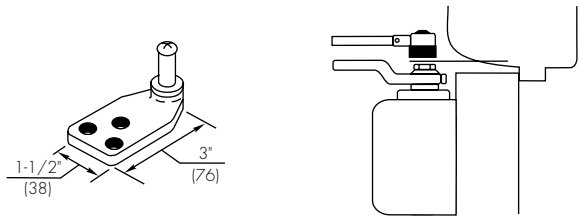


**Molded/Bull Nose Trim - #2403B Bracket:** For use where the door frame has molded or bull nose trim which will not accept a standard non-hold open shoe. The bracket is mortised into the frame rabbet, and projects beyond the face of the frame. It will accommodate a frame rabbet up to 2" (51mm) deep.

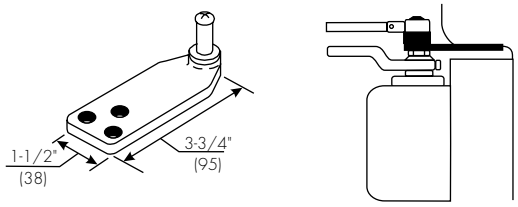


**Molded / Bull Nose Trim - #2403-3/4 Bracket:** This bracket is similar to, but longer than, the 2403B bracket. It is designed to accommodate frame rabbets from 2" to 2-7/8" (51 to 73mm) deep.

### Brackets for Hold Open Arms

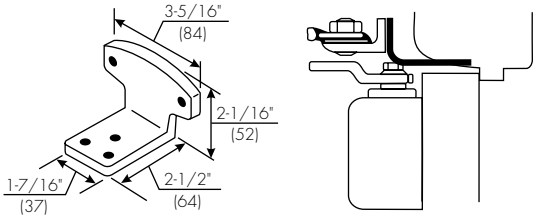


**Molded / Bull Nose Trim - #80 Bracket:** For use where the door frame has molded or bull nose trim which will not accept a standard hold open shoe. It is mortised into the frame rabbet, and projects beyond the face of the frame. It will accommodate a rabbet up to 2" (51mm) deep. This bracket is used in combination with the standard hold-open mounting shoe.

## TOP JAMB ARM

### Closer Mounting Plates
### Slim Line Installations

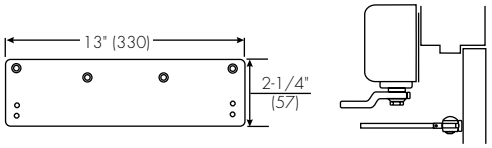


**Low Ceiling Clearance - #8146 Drop Plate:** For use where low ceiling clearance prevents normal top jamb mounting. This plate is used when clearance is from 1-7/8" to 2-7/8" (48 to 73mm). Where ceiling clearance is less than 1-7/8" (48mm) see #8148 Drop Plate on page 30.

**Overhead Door Holder - #8146 Drop Plate:** For use where a surface or concealed overhead door holder prevents normal top jamb mounting. This plate drops the closer and allows arm mounting screws to clear the bottom of the door holder. This places the centerline of the arm mounting screws at 2-7/8" (73mm) from the top of the door.


Copyright © 2002-2016 Yale Security Inc., an ASSA ABLOY Group company. All rights reserved.
Reproduction in whole or in part without the express written permission of Yale Security Inc. is prohibited.

## Closer Mounting Plates
## Slim Line Installations

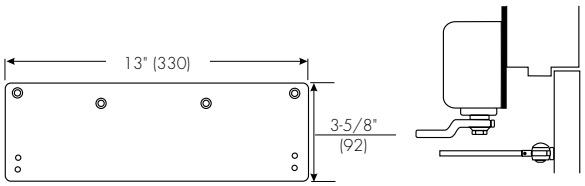


**Low Ceiling Clearance - #8148 Drop Plate:** For use where the ceiling clearance is between 1-1/2" and 1-3/4" (38 and 44mm).

## Metal Cover Installations

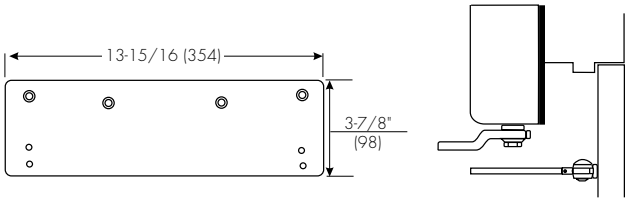


**Low Ceiling Clearance - Overhead Door Holder - #8547 Metal Full Cover Drop Plate:** For use where a low ceiling clearance prevents normal top jamb mounting. This plate is used when the clearance is between 1-5/8" and 3-7/8" (41 and 98mm). Or for use where a surface or concealed overhead door holder prevents normal top jamb mounting of a closer with a metal full cover. This plate drops the closer and allows arm mounting screws to clear the bottom of the door holder. This places the centerline of the arm mounting screws at 3-7/8" (98mm) from the top of the door.

## Architectural Plastic or Metal Cover Installations

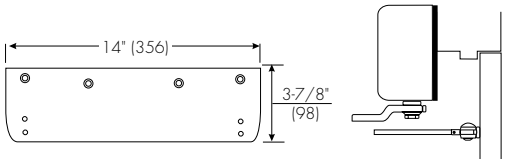


**Low Ceiling Clearance - Overhead Door Holder - #8547A Architectural Plastic or Architectural Metal Cover Drop Plate:** For use where low ceiling clearance prevents normal top jamb mounting. This plate is used when the clearance is between 1-5/8" and 3-7/8" (41 and 98mm). Also for use where a surface or concealed overhead door holder prevents normal top jamb mounting of a closer with an architectural plastic or metal full cover. This plate drops the closer and allows arm mounting screws to clear the bottom of the door holder. This places the centerline of the arm mounting screws at 3-7/8" (98mm) from the top of the door.


Copyright © 2002-2016 Yale Security Inc., an ASSA ABLOY Group company. All rights reserved.
Reproduction in whole or in part without the express written permission of Yale Security Inc. is prohibited.

## Closer Mounting Plates
## Slim Line Installations

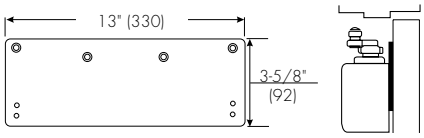


**Narrow Top Rail - #8148 Drop Plate:** For use where a narrow top rail prevents the closer from being mounted directly to the door surface. This drop plate can be used to mount a closer on a top rail as narrow as 2-7/8" (73mm) in height.

## Full Cover Installations

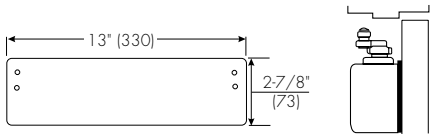


**Exposed Back - #8445 Molded Full Cover Decorative Back Plate:** For use on doors with glass lights where a closer with molded full cover is installed and the closer back is exposed. This plate covers the back of the installation to give a pleasing appearance from the reverse side.

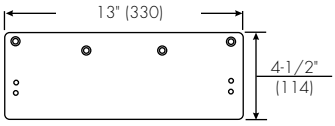


**Exposed Back/Narrow Top Rail - #8158 Molded Full Cover Drop Plate:** For use on doors with glass lights where a closer with molded full cover is installed and the back of the closer is exposed. This covers the back of the installation and gives a pleasing appearance from the reverse side.

## Metal Cover Installations

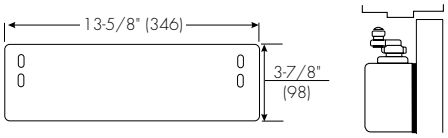


**Exposed Back - #8545 Metal Full Cover Decorative Back Plate:** For use on doors with glass lights where a closer with full metal cover is installed and the back of the closer is exposed. This plate covers the back of the installation and gives a pleasing appearance from the reverse side.

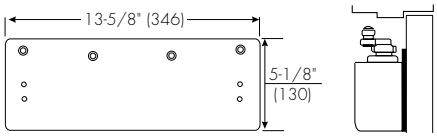


**Exposed Back/Narrow Top Rail - #8548 Metal Full Cover Drop Plate:** For use on doors with glass lights where a closer with metal full cover is installed on a narrow top rail, and the back of the cover is exposed. This drop plate can be used to mount a closer on a top rail as narrow as 2-7/8" (73mm) in height. This plate covers the back of the installation and gives a pleasing appearance from the reverse side.

## Architectural Plastic or Metal Cover Installations

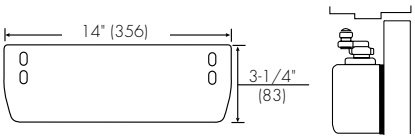


**Exposed Back - #8545A Architectural Plastic or Architectural Metal Cover Decorative Back Plate:** For use on doors with glass lights where a closer with an architectural plastic or metal cover is installed and the closer back is exposed. This plate covers the back of the installation to give a pleasing appearance from the reverse side.

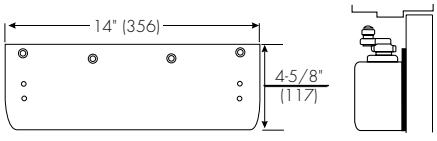


**Exposed Back/Narrow Top Rail - #8548A Architectural Plastic or Architectural Metal Cover Drop Plate:** For use on doors with glass lights where a closer with an architectural plastic or metal cover is installed on a narrow top rail, and the back of the cover is exposed. This drop plate can be used to mount a closer on a top rail as narrow as 2-7/8" (73mm) in height. This plate covers the back of the installation to give a pleasing appearance from the reverse side.



Copyright © 2002-2016 Yale Security Inc., an ASSA ABLOY Group company. All rights reserved.
Reproduction in whole or in part without the express written permission of Yale Security Inc. is prohibited.

## Brackets for Non-Hold Open Arms

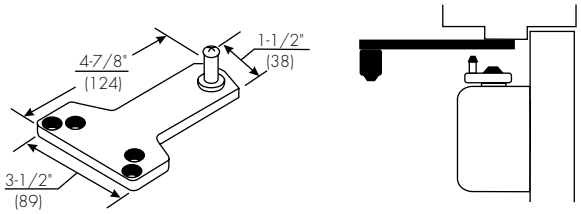


**Standard Installation - #1618A Soffit Plate:** This soffit plate is supplied standard with parallel arm closers. It can be mounted where the frame soffit is as narrow as 1" (25 mm).

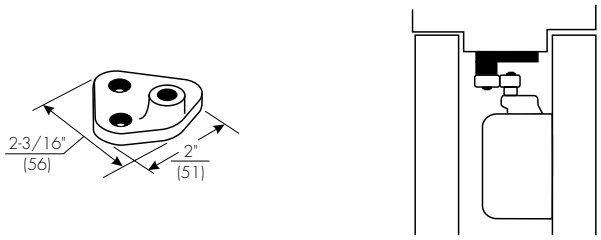


**Mounting between Doors - #2018 Soffit Bracket:** For use where insufficient space between companion doors does not permit use of other soffit plates. This bracket permits mounting of the closer between doors with as little as 3" (76mm) of header space. Permits closer arm to clear up to 5/8" (16mm) high stop.

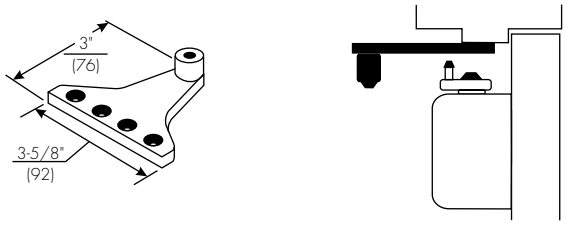


**Narrow Frame/Removable Stop - #2018B Soffit Plate:** For use where a narrow frame or frame with removable stop does not permit use of the standard soffit plate. This soffit plate may be mounted on the frame soffit or the frame rabbet where the stop does not exceed 5/8" (16mm) in height. All of the screw holes are in a straight line, requiring as little as 1-1/4" (32mm) of frame reveal to mount bracket and maintain good closer arm geometry. Where the frame soffit is as wide as 2" (51mm), this soffit plate may be used to clear weather-stripping that is up to 1-3/8" (35mm) wide and 5/8" (16mm) in height.

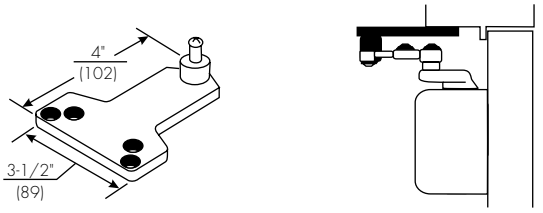


**Blade/Applied Stop - #2018D Soffit Plate:** For use where a blade or applied stop does not permit installation of the standard soffit plate. Mounts to either the frame soffit or rabbet. Since this soffit plate projects 7/8" (22mm) less than a standard soffit plate, it requires a minimum frame reveal of 1-1/2" (38mm). Permits closer to clear up to a 5/8" (16mm) stop.

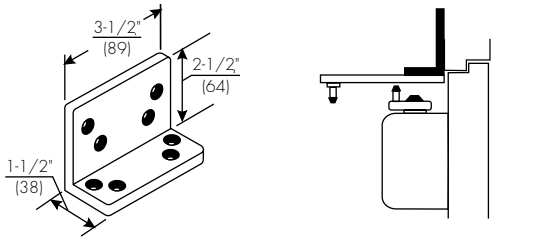


**Flush Transom - #2022 Angle Bracket:** For use where rabbeted or flush transom conditions prevent installation of a soffit plate. Used in combination with the 1618 soffit plate, or may be used in combination with the 2018S soffit plate when it is necessary for the closer arm to clear a separate overhead door holder.

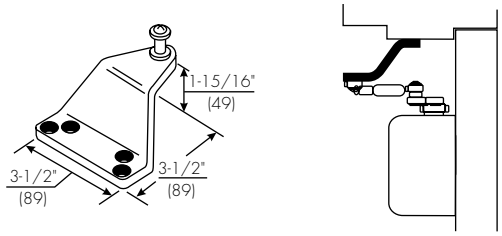


**Extra-Clearance - #2018S Offset Soffit Plate:** For use where the need for additional clearance prevents use of the standard soffit plate. This plate mounts to the frame soffit to provide up to 2" (51mm) of clearance when a separate overhead door holder is used. Standard mounting requires a 2-5/8" (67mm) wide frame soffit. It may also be used where unusually high frame stops or weather-stripping prevent the use of other soffit plates.


Copyright © 2002-2016 Yale Security Inc., an ASSA ABLOY Group company. All rights reserved.
Reproduction in whole or in part without the express written permission of Yale Security Inc. is prohibited.

## Brackets for Non-Hold Open & Hold Open Arms

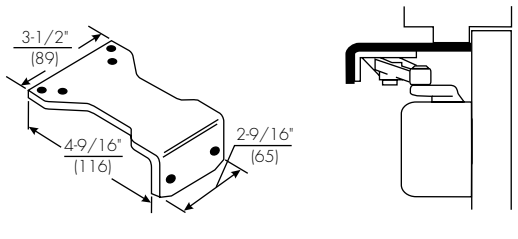


**Parallel Hold-Open - #1628H Adapter Plate:** Supplied standard with all parallel arm hold open closers. It can also be used to convert regular arm or top jamb hold open arms to parallel arm installation. It can be mounted where the frame soffit is as narrow as 1" (25mm).

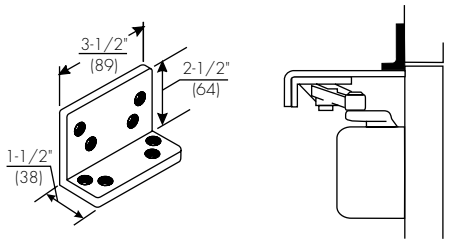


**Flush Transom - #2022 Angle Bracket:** For use where rabbeted or flush transom conditions prevent installation of a soffit plate. Used in combination with the 1628H adapter plate, this bracket fastens to the overhead transom to provide a mounting surface for the soffit plate assembly.

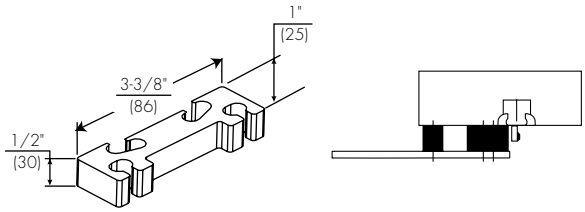


**Clearance/Support Blade Stop - #6891 Spacer Block:** For use where the door frame has a blade stop and the soffit plate must be mounted on the frame rabbet. This accessory is used in combination with the standard spacer block to provide clearance of the blade stop. Also used with non-hold open arms.


Copyright © 2002-2016 Yale Security Inc., an ASSA ABLOY Group company. All rights reserved.
Reproduction in whole or in part without the express written permission of Yale Security Inc. is prohibited.

## Closer Mounting Plates
## Slim Line Installations

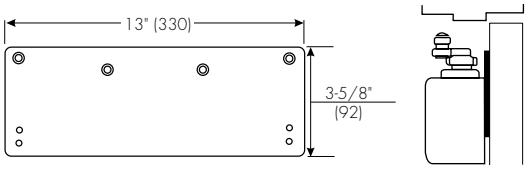


**Narrow Top Rail - #8148 Drop Plate:** For use where a narrow top rail prevents the closer from being mounted directly to the door surface. This drop plate can be used to mount a closer on a top rail as narrow as 2-9/16" (65mm) in height.

## Full Cover Installations

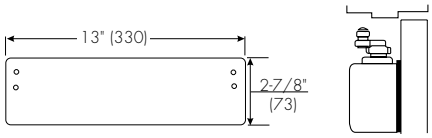


**Exposed Back - #8445 Molded Full Cover Decorative Back Plate:** For use on doors with glass lights where a closer with molded full cover is installed and the closer back is exposed. This plate covers the back of the installation to give a pleasing appearance from the reverse side.

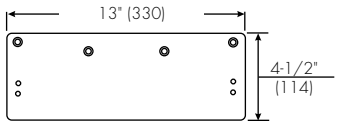


**Exposed Back/Narrow Top Rail - #8158 Molded Full Cover Drop Plate:** For use on doors with glass lights where a closer with molded full cover is installed and the back of the closer is exposed. This covers the back of the installation and gives a pleasing appearance from the reverse side.

## Metal Cover Installations

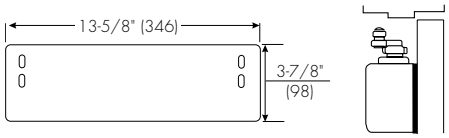


**Exposed Back - #8545 Metal Full Cover Decorative Back Plate:** For use on doors with glass lights where a closer with full metal cover is installed and the back of the closer is exposed. This plate covers the back of the installation and gives a pleasing appearance from the reverse side.

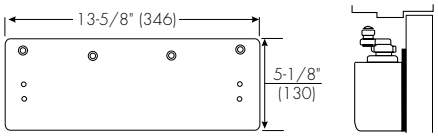


**Exposed Back/Narrow Top Rail - #8548 Metal Full Cover Drop Plate:** For use on doors with glass lights where a closer with metal full cover is installed on a narrow top rail, and the back of the cover is exposed. This drop plate can be used to mount a closer on a top rail as narrow as 2-9/16" (65mm) in height. This plate covers the back of the installation and gives a pleasing appearance from the reverse side.

## Architectural Plastic or Metal Cover Installations

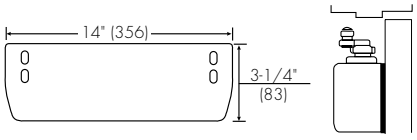


**Exposed Back - #8545A Architectural Plastic or Architectural Metal Cover Decorative Back Plate:** For use on doors with glass lights where a closer with an architectural plastic or metal cover is installed and the closer back is exposed. This plate covers the back of the installation to give a pleasing appearance from the reverse side.

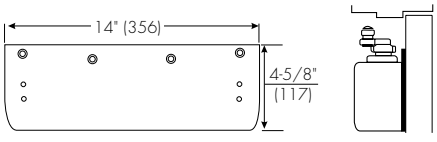


**Exposed Back/Narrow Top Rail - #8548A Architectural Plastic or Architectural Plastic or Architectural Metal Cover Drop Plate:** For use on doors with glass lights where a closer with an architectural plastic or metal cover is installed on a narrow top rail, and the back of the cover is exposed. This drop plate can be used to mount a closer on a top rail as narrow as 2-9/16" (65mm) in height. This plate covers the back of the installation to give a pleasing appearance from the reverse side.


Copyright © 2002-2016 Yale Security Inc., an ASSA ABLOY Group company. All rights reserved.
Reproduction in whole or in part without the express written permission of Yale Security Inc. is prohibited.

## Brackets for Non-Hold Open Arms & Hold Open Arms

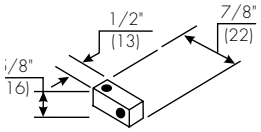


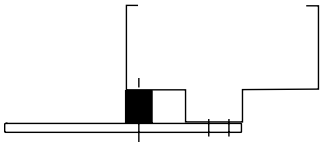

**Standard - #2019S Spacer Block:** For use where a narrow frame soffit does not provide adequate support for the soffit plate. Supplied as standard with all parallel rigid arm closers.

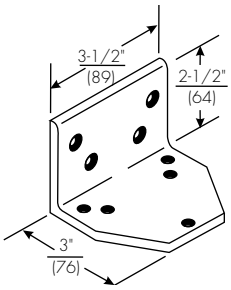


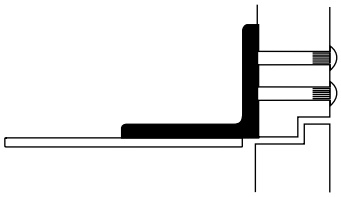

**Flush Rabbeted Transom - #2019L Angle Bracket:** For use where flush transom conditions prevent mounting of the standard soffit plate. This bracket is used in combination with the standard soffit plate.

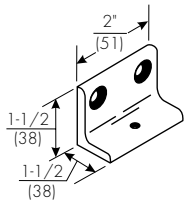


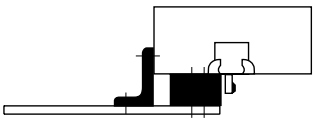

**Narrow Frame - #6890 Support Bracket:** For use where the frame is narrow and the soffit plate cannot be mounted directly to the frame soffit or rabbet. Used in combination with the #6891 Spacer Block on blade stop frames to provide extra support and needed clearance of the blade stop. Used on frames where the frame stop does not exceed 5/8" (16mm) in height.

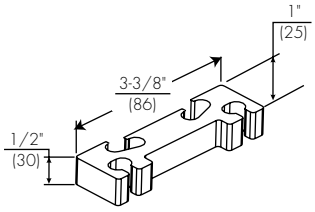


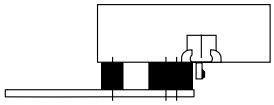

**Clearance/Support Blade Stop - #6891 Spacer Block:** For use where the door frame has a blade stop and the soffit plate must be mounted on the frame rabbet. This accessory is used in combination with the standard spacer block to provide clearance of the blade stop.



Copyright © 2002-2016 Yale Security Inc., an ASSA ABLOY Group company. All rights reserved.
Reproduction in whole or in part without the express written permission of Yale Security Inc. is prohibited.

## Closer Mounting Plates
## Parallel Arm

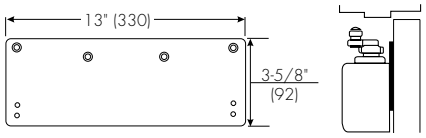


**Narrow Top Rail - #8148 Drop Plate:** For use where a narrow top rail prevents the closer from being mounted directly to the door surface. This drop plate can be used to mount a closer on a top rail as narrow as 2-7/16" (62mm) in height.

## Full Cover Installations

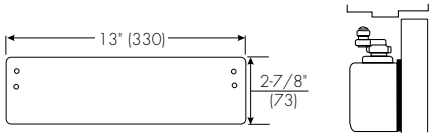


**Exposed Back - #8445 Molded Full Cover Decorative Back Plate:** For use on doors with glass lights where a closer with molded full cover is installed and the closer back is exposed. This plate covers the back of the installation to give a pleasing appearance from the reverse side.

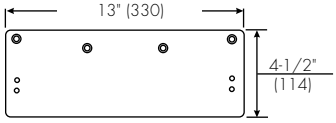


**Exposed Back/Narrow Top Rail - #8158 Molded Full Cover Drop Plate:** For use on doors with glass lights where a closer with molded full cover is installed and the back of the closer is exposed. This covers the back of the installation and gives a pleasing appearance from the reverse side.

## Metal Cover Installations

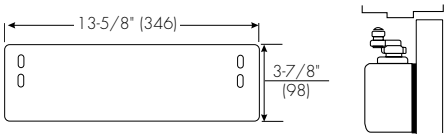


**Exposed Back - #8545 Metal Full Cover Decorative Back Plate:** For use on doors with glass lights where a closer with full metal cover is installed and the back of the closer is exposed. This plate covers the back of the installation and gives a pleasing appearance from the reverse side.

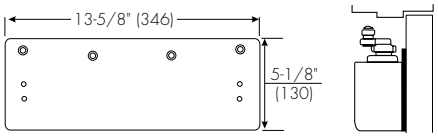


**Exposed Back/Narrow Top Rail - #8548 Metal Full Cover Drop Plate:** For use on doors with glass lights where a closer with metal full cover is installed on a narrow top rail, and the back of the cover is exposed. This drop plate can be used to mount a closer on a top rail as narrow as 2-9/16" (65mm) in height. This plate covers the back of the installation and gives a pleasing appearance from the reverse side.

## Architectural Plastic or Metal Cover Installations

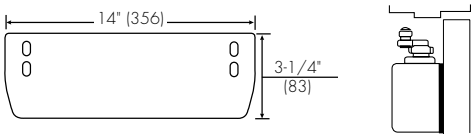


**Exposed Back - #8545A Architectural Plastic or Architectural Metal Cover Decorative Back Plate:** For use on doors with glass lights where a closer with an architectural plastic or metal cover is installed and the closer back is exposed. This plate covers the back of the installation to give a pleasing appearance from the reverse side.

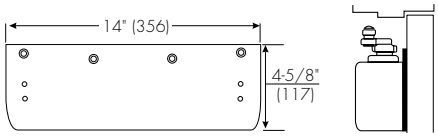


**Exposed Back/Narrow Top Rail - #8548A Architectural Plastic or Architectural Plastic or Architectural Metal Cover Drop Plate:** For use on doors with glass lights where a closer with an architectural plastic or metal cover is installed on a narrow top rail, and the back of the cover is exposed. This drop plate can be used to mount a closer on a top rail as narrow as 2-7/16" (62mm) in height. This plate covers the back of the installation to give a pleasing appearance from the reverse side.


Copyright © 2002-2016 Yale Security Inc., an ASSA ABLOY Group company. All rights reserved.
Reproduction in whole or in part without the express written permission of Yale Security Inc. is prohibited.

## Closer Mounting Plate

### Soffit Plate Reinforcing Brackets (for Parallel Arm)

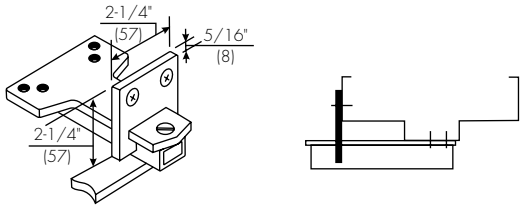


**Additional Support - #6190 Reinforcing Bracket:** Standard for use with all parallel arm *Unitrol* door controls. Provides additional support to the soffit plate on installations with door frame reveals from 1-7/8" to 4-5/8" (48 to 117mm).

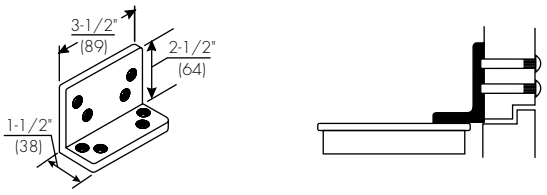


**Flush Rabbeted Transom - #2022 Angle Bracket:** Optional for use with all parallel arm *Unitrol* door controls. For use where rabbeted or flush transom conditions prevent installation of the soffit plate assembly. This bracket fastens to the overhead transom to provide a mounting surface for the soffit plate assembly.

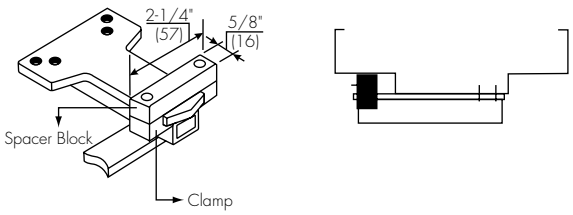


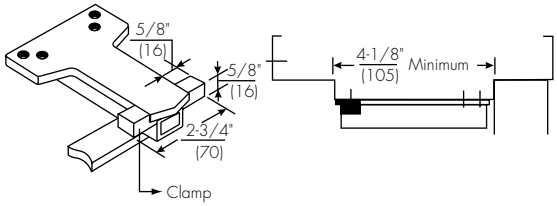


**Wide Frame - #6191 Reinforcing Kit:** Optional for use with all parallel arm *Unitrol* door controls. Used to support the soffit plate on installations with wide frames. Clamps may be used with or without the spacer block, depending on frame conditions.



Copyright © 2002-2016 Yale Security Inc., an ASSA ABLOY Group company. All rights reserved.
Reproduction in whole or in part without the express written permission of Yale Security Inc. is prohibited.

## Closer Mounting Plates
## Top Jamb

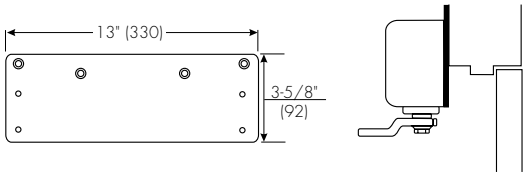


**Narrow Top Rail - #8148 Drop Plate:** For use where a narrow top rail prevents the closer from being mounted directly to the door surface. This drop plate can be used to mount a closer on a top rail as narrow as 2-7/16" (62mm) in height.

## Full Cover Installations

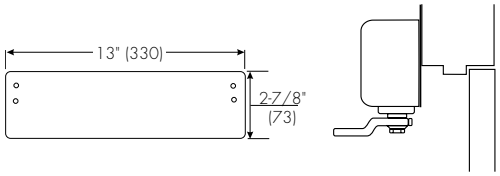


**Exposed Back - #8445 Molded Full Cover Decorative Back Plate:** For use on doors with glass lights where a closer with molded full cover is installed and the closer back is exposed. This plate covers the back of the installation to give a pleasing appearance from the reverse side.

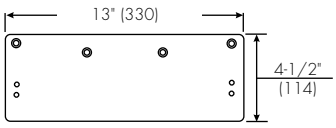


**Exposed Back/Narrow Top Rail - #8158 Molded Full Cover Drop Plate:** For use on doors with glass lights where a closer with molded full cover is installed and the back of the closer is exposed. This covers the back of the installation and gives a pleasing appearance from the reverse side.

## Metal Cover Installations

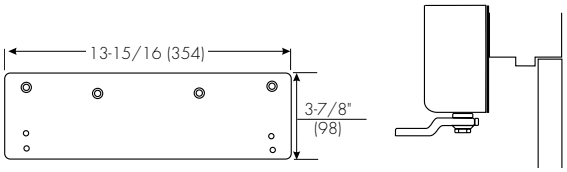


**Low Ceiling Clearance - Overhead Door Holder - #8547 Metal Full Cover Drop Plate:** For use where a low ceiling clearance prevents normal top jamb mounting. This plate is used when the clearance is between 1-5/8" and 3-3/4" (41 and 95mm). Or for use where a surface or concealed overhead door holder prevents normal top jamb mounting of a closer with a metal full cover. This plate drops the closer and allows arm mounting screws to clear the bottom of the door holder. This places the centerline of the arm mounting screws at 3-7/8" (98mm) from the top of the door.

## Architectural Plastic or Metal Cover Installations

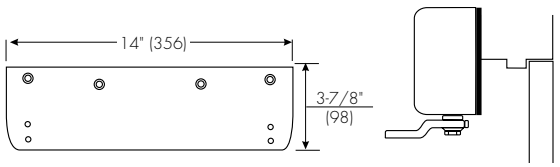


**Low Ceiling Clearance - Overhead Door Holder - #8547A Architectural Plastic or Architectural Metal Cover Drop Plate:** For use where low ceiling clearance prevents normal top jamb mounting. This plate is used when the clearance is between 1-5/8" and 3-3/4" (41 and 95mm). Or for use where a surface or concealed overhead door holder prevents normal top jamb mounting of a closer with an architectural plastic or metal full cover. This plate drops the closer and allows arm mounting screws to clear the bottom of the door holder. This places the centerline of the arm mounting screws at 3-7/8" (98mm) from the top of the door.


Copyright © 2002-2016 Yale Security Inc., an ASSA ABLOY Group company. All rights reserved.
Reproduction in whole or in part without the express written permission of Yale Security Inc. is prohibited.

# Architectural Door Accessories

ASSA ABLOY

**HW-035**

Revision Date:

## Pemko Adhesive Gasketing: Siliconseal™ Adhesive-backed Fire/Smoke Gasketing

The global leader in door opening solutions

**S88_**

AVAILABLE FINISHES: **BL, C, D, GR, TAN, W**
AVAILABLE LENGTHS: **17', 18', 20', 21', 25', 30', 204'**
WIDTH: **1/2" (12.7 mm)**
HEIGHT: **1/4" (6.4 mm)**

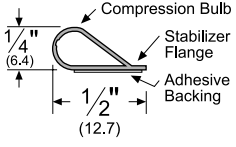


**BL** (Black)
**C** (Clear)
**D** (Dark Brown)
**GR** (Gray)
**TAN** (Tan)
**W** (White)

| |
|---|
| TITLE: |
| PREPARED FOR: |
| PREPARED BY: |
| DATE: |
| COMMENTS: |

Copyright © 2017, Pemko Manufacturing Co., an ASSA ABLOY Group company. All rights reserved.
Reproduction in whole or in part without the express written permission of Pemko Manufacturing Co. is prohibited.

# 8800 Rim Exit Device Line

SARGENT manufactures a full line of exit devices providing the best combination of simplicity, strength, durability, aesthetics and innovation. The 8800 series is designed for standard width stile applications on wood and metal doors. This reversible rim exit device sets the industry standard for durability and reliability.

## Features

- Designed for standard width stile applications on wood and metal doors
- Most functions are non-handed
- Single point rim latching device
- Single door & double door applications with mullions
- Quiet operation and solid security
- Devices are ANSI A156.3 - Grade 1
- UL Fire and Panic
  listed
  Note: Any retrofit or other field modification to a fire rated opening can potentially impact the fire ratings of the opening, and Sargent Manufacturing Company makes no representations or warranties concerning what such impact may be in any specific situation. When retrofitting any portion of an existing fire rated opening, or specifying and installing a new fire-rated opening, please consult with a code specialist or local code official (Authority Having Jurisdiction) to ensure compliance with all applicable codes and ratings.

## Specifications

- Door Types: Wood or metal 1-3/4"(44mm) Thick Door; Over 1-3/4" specify thickness and order as a 31- prefix.
- Door Widths:
  E Rail - 24" to 32" (61cm to 81cm) No cutting required for 32" door;
  F Rail - 33" to 36" (84cm to 91cm) No cutting required for 36" door
  J Rail - 37" to 42" (94cm to 107cm) No cutting required for 42" door;
  G Rail - 43" to 48" (110cm to 122cm) No cutting required for 48" door
- Strike: 649 Standard Black Nylon Coated
- Optional Strikes: 642, 644 and 613
- Dogging Feature: Hex key dogging standard; Cylinder dogging available (16-)
- NEW! - Visual Status Lock/Unlock Indicator (49-) available on 8816 devices only
- 
- Electric Options: AL-Alarm, PL-SARGuide Photoluminescent, TL-SARGuide Illuminated Touchpad, 53-LX latchbolt Monitor, 54-Outside lever monitoring, 55-Request-to-exit Signal-Rail monitoring, 56-ELR remote latch retraction, 57-Delay egress & Electromagnets, 58-Electric Dogging, 59-Electroguard-Self contained Delayed egress
- Mounting Fasteners: Supplied standard with wood and machine screws; Available with through-bolts and mortise (sex) nuts
- Latch Bolt: Stainless steel, 3/4" (19mm) throw
- Device Centerline from Finished Floor: 41" (1041 mm)
- Center Case Dimensions: 8-3/8" (213mm) x 2-5/8" (67mm)
- Projection: Pushbar Neutral – 3" (76 mm); Pushbar Depressed – 2-1/8" (54 mm)

© SARGENT Manufacturing Company, 2017 

# 8800 Rim Exit Device Line Components

## Trim

Odeon - MV
(Handed)

ET Trim

## Finishes

26D: Satin
Chrome Plated
(BHMA 626)

## Functions

15:Passage Only
(No Cylinder)

© SARGENT Manufacturing Company, 2017 

# HC8800 Rim Exit Device Line

SARGENT manufactures a fine line of exit devices providing the best combination of durability, simplicity, strength, aesthetics and innovation. The HC8800 device is designed for standard width stile applications on metal doors. The Hurricane Code Hardware has been accepted by Dade County, Florida. It meets the abuse and high wind loads required by South Florida building code. These exits are accepted and approved for use with CURRIES hollow metal doors and McKinney hinges.

## Features

- Designed for standard width stile applications on metal doors. For doors 1-3/4" (44mm) thick
- Single door applications - WS8800 Series
- Single and double door applications - HC8800 Series
- Solid stainless steel latchbolt. Meets UL panic test requirements without roller strikes which compromise strengh and durability
- "Anti-walk" latchbolt design eliminiates the need for guarded latchbolt
- Withstands over 5 times ANSI/BHMA A156.3 2008 grade 1 standards for static load test simulating forced entry
- UL Fire and Panic listed
  Note: Any retrofit or other field modification to a fire rated opening can potentially impact the fire rating of the opening, and Sargent Manufacturing Company makes no representations or warranties concerning what such impact may be in any specific situation. When retrofitting any portion of an existing fire rated opening, or specifying and installing a new fire-rated opening, please consult with a code specialist or local code official (Authority Having Jurisdiction) to ensure compliance with all applicable codes and ratings.
- UL listed to ANSI 250.13 Severe Windstorm and listed on Florida Building Code Website
- Approved for use in Dade County, Florida with Notice of Acceptance (See approved windstorm products on page 54 and 55 of the catalog)
- Stainless steel springs throughout
- Simple lever principle with push type action
- Rail travels in direction of door swing
- Trim is thru bolted
- Electric functions available. Consult Product System Manual
- All exit devices meet ANSI standard 156.3, Grade 1
- All exit devices are UL Listed

© SARGENT Manufacturing Company, 2017 

# HC8800 Rim Exit Device Line Components

## Trim

Odeon - MV
(Handed)

ET Trim

## Finishes

26D: Satin
Chrome Plated
(BHMA 626)

## Functions

13:Key outside
Unlocks/Locks
Trim; #41
Cylinder supplied

© SARGENT Manufacturing Company, 2017 Phone: 800-727-5477

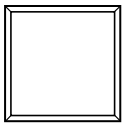

## Wall Guard No. 606

**Material:** Clear rubber

**Other:** Sold in sheets of 55

**Features:** Self-adhesive mounting

| No. | Fastener | Size | Weight |
|---|---|---|---|
| 606 | Self-adhesive back | 1" x 1" | 0.4 lbs./55 |

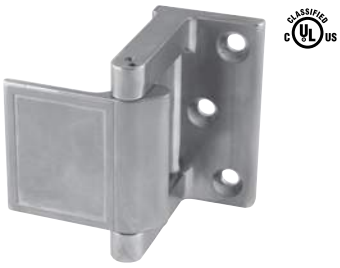

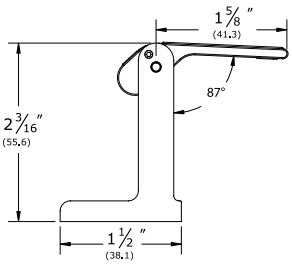


## Privacy Door Latch No. PDL (formerly 607)

**Material:** Zinc die cast

**Finishes:** BRS, DBRS, STNN, CRM, DCRM, ORB

**Features:**
- ADA compliant
- Enhanced in room privacy
- Easy to install
- For use with UL Classified fire doors for use with hollow metal steel composite type fire doors rated up to and including 3 hrs Wood composite type fire doors rated up to and including 1 1/2 hrs and 20 minutes without hose stream

| No. | Fastener | Size | Weight |
|---|---|---|---|
| PDL | #12 x 1 1/4" FH SMS | 1 1/2 " x 2 13/16" | 0.75 lbs. |

## Door Silencer No. 608CA

**Material:** Clear rubber

**Other:** Sold in packages of 300

**Features:** Self-adhesive mounting

| No. | Fastener | Size | Weight |
|---|---|---|---|
| 608CA | 3/8" dia. x 1/8" | Metal or wood | 0.2 lbs./300 |

*608*

*609*

## Door Silencers No. 608, 609

**Material:** DuraFlex gray rubber

**Other:** Sold in packages of 100

| No. | Size | Frame Type | Weight | ANSI A156.16 |
|---|---|---|---|---|
| 608 | 1/2" dia. x 5/8" | Metal | 1.3 lbs./500 | L03011 |
| 609 | 3/8" x 3/4" | Wood | 1.3 lbs./500 | L03021 |

ASSA ABLOY

The global leader in door opening solutions



Copyright © 2012-2015, Rockwood Manufacturing Company, an ASSA ABLOY Group company. All rights reserved
Reproduction in whole or in part without the express written permission of Rockwood Manufacturing Company is prohibited.

# VingCard Essence
## Electronic Lock

**HW-039**
Revision Date:

**VingCard Essence revolutionizes the electronic lock industry by housing all lock components, including the reader and mobile access board, inside the door and therefore, reaching the maximum minimalistic expression, the true essence of an electronic lock.**

**VingCard Essence is always delivered as Mobile Access ready. With Mobile Access board included inside the reader, your property is ready for using the mobile phone as guest room key whenever required.**

## FEATURES

: Solid Stainless Steel or brass handles with self-lubricating long life bearings.
: 3-point steel latch construction with an antifriction mechanism.
: Case hardened full 1-inch (ANSI) throw deadbolt.
: Panic release function – the deadbolt and latch are automatically retracted by inside handle for easy egress in emergency situations.
: ADA compliant (users with physical disabilities).
: Future proof re-programmable FLASH lock memory.
: Powered by three (3) AA batteries that provide up to 2 years normal life (depending on door traffic and online/mobile access functionality).
: Compatible with Visionline Software platform.
: 2000 event audit trail.
: Optional high security mechanical override (key cylinder).
: Mobile Access board included in reader.
: RFID Specifications:
- 13,56MHz technology
- compatible with the following standards:
  - ISO 14.443 A (MIFARE including Desfire)
  - ISO 14.443 B
  - ISO 15.693

## DIMENSIONS

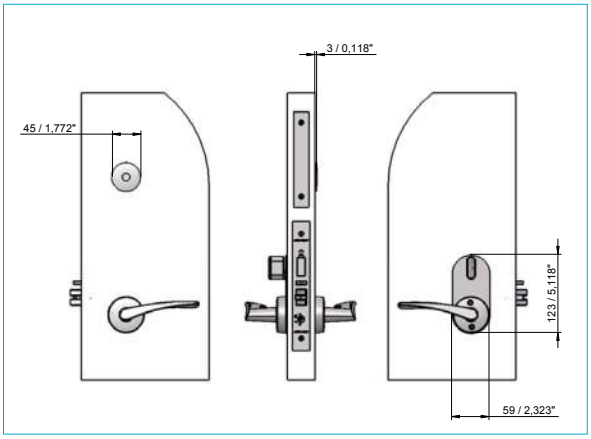


ASSA ABLOY

ASSA ABLOY Hospitality

The global leader in door opening solutions

## TECHNICAL DATA

| | |
|---|---|
| Power | 4,5 V DC (3 x AA alkaline batteries). |
| Battery location | Inside of the door in electronics module. |
| Material | Handles: Stainless steel quality SUS304<br>RFID cover: Polycarbonate UL94V0 (Makrolon 6555). |
| Metal finishes | Satin Chrome (Stainless Steel with PVD), Polished Chrome (Stainless Steel with PVD), Satin Brass (Stainless Steel with PVD), Polished Brass (Stainless Steel with PVD), Light Bronze, Velour Nickel and US Antique Dark. |
| Standard plastic color | Black and white. |
| Handle options in standard range | Straight, Functional ANSI, Wing. Also compatible with 20 different Valli&Valli design handles. |
| Emergency opening options | Electronic emergency opening with service unit and optional mechanical cylinder. |
| User interface | 3 colored light pipe shaped as ring around the reader (green, red, yellow). |
| Locking mechanism | Electro-mechanical locking mechanism located in the lockcase. |
| Door thickness | 34 - 120 mm / 1,34 - 4,72 Inches. |
| System software compatibility | Visionline. |
| Online compatibility | Wireless (based on ZigBee protocol) in Visionline. |
| Storage temperature | 0-70 °C / 32-158 °F: non-condensing environment. |
| Tested operating temperature | Tested from -25 °C to 70 °C ( -13 °F to 158 °F), according to IEC 60068-2. |
| Certifications | European EMC, LVD and R&TTE Directives.<br>Approved according to EN14846.<br>Fire approved according to EN 1634-1.<br>Fire approved according to UL (timber doors). |
| Supported RFID standards | ISO 14.443 A, ISO 14.443 B, ISO 15.693 |
| Mobile Access support | Mobile Access board included in reader unit. |

ANSI DB lockcase:

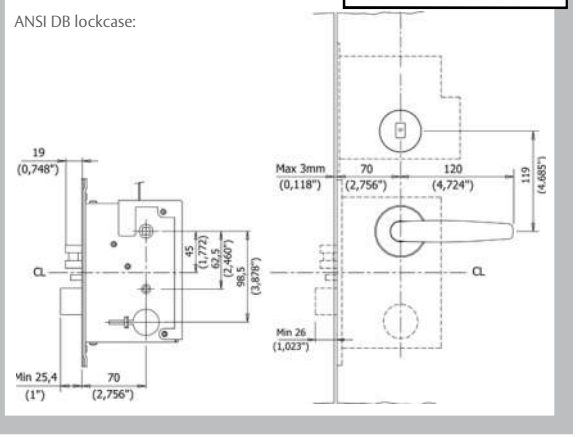


ANSI DA lockcase:

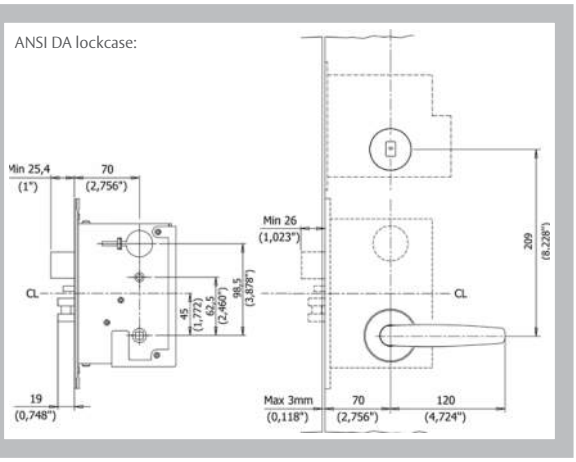


EURO lockcase:

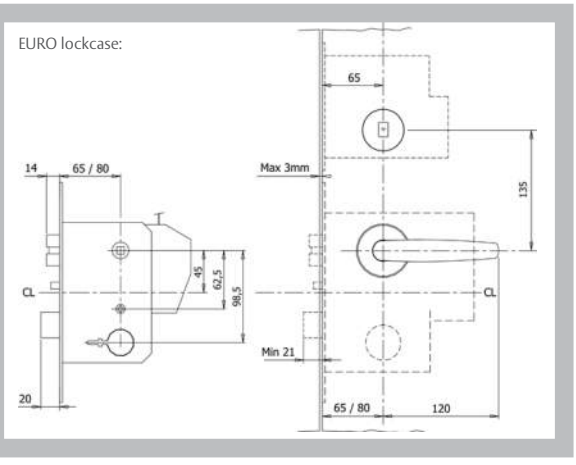


## LOCKCASE DIMENSIONS

| | |
|---|---|
| ANSI lock case variants | ANSI DA, ANSI DB (both available in the following versions:4-switch, Auto deadbolt (ADB) Australia version (AUS) and Japan (JPN) version). |
| ANSI lock case widths | 25 mm / 0,98 inches, 28 mm / 1,10 inches, 32 mm / 1,26 inches. |
| ANSI backset | 70 mm / 2,76 inches. |
| EURO lock case variants | EURO, EURO ADB, EURO MPA. |
| EURO lock case widths | 20 mm / 0,79 inches, 22 mm / 0,87 inches, 24 mm / 0,94 inches. |
| EURO backsets | 65 mm / 2,56 inches, 80 mm / 3,15 inches. |



Art no: 4819065 | Doc. Printed: 12/2016 | Copyright ASSA ABLOY ©
Specifications may change without notice | Note: Image colors in this brochure may differ from actual colors

# Five Knuckle Heavy Weight Full Mortise Series

**Recommended for use on high frequency and/or heavy wood or metal doors in schools, hospitals or other public buildings where heavy traffic is experienced.**

- Heavy weight hinges should be used on all extra heavy doors or those exposed to high frequency use
- T4A3386- Stainless steel base or available in brass base material polished
- T4A3786- Steel base material
- For Beveled Edge, where doors are beveled on hinge side, specify T4A4386 or T4A4786
- For available finishes see page 29

T4A3386
T4A3786

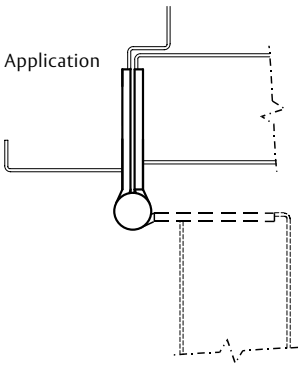


**Note:** 8" x 6" and 8" x 8" have six bearings. Specify T6B3386 or T6B3786.

| No. | ANSI Cross Reference | Base Material | Weight |
|---|---|---|---|
| T4A3386 | A5111 | Stainless | HVY |
| T4A3386 | A2111 | Brass | HVY |
| T4A3786 | A8111 | Steel | HVY |

**Specifications**

| Inches | mm | Gauge | No. of Holes | Fasteners | |
|---|---|---|---|---|---|
| | | | | Machine | Wood |
| 4 1/2" x 4" | 114.3 x 101.6 | .180 | 8 | 1/2 x 12-24 | 1 1/4 x 12 |
| 4 1/2" x 4 1/2" | 114.3 x 114.3 | .180 | 8 | 1/2 x 12-24 | 1 1/4 x 12 |
| 5" x 4 1/2" | 127 x 114.3 | .190 | 8 | 1/2 x 12-24 | 1 1/4 x 12 |
| 5" x 5"* | 127 x 127 | .190 | 8 | 1/2 x 12-24 | 1 1/4 x 12 |
| 6" x 5"* | 152.4 x 127 | .203 | 8 | 1/2 x 1/4-24 | 1 1/4 x 14 |
| 6" x 6"* | 152.4 x 152.4 | .203 | 10 | 1/2 x 1/4-20 | 1 1/2 x 14 |
| 8" x 6"** | 203.2 x 125.4 | .203 | 16 | 1/2 x 1/4-20 | 1 1/2 x 14 |
| 8" x 8"*** | 203.2 x 203.2 | .203 | 16 | 1/2 x 1/4-20 | 1 1/2 x 14 |

* Not available in brass base material.
** Available in steel only.
***Available in stainless steel only.

**Options:**

| Code | Description |
|---|---|
| **NRP** | Non-Removable Pin |
| **T4B** | Ball Bearing |
| **TCA** | Concealed Bearing |
| **RC** | Round Corner – 1/4" radius furnished unless specified otherwise |
| **HT** | Hospital Tip |
| **BT** | Ball Tip |
| **ST** | Steeple Tip |
| **SSF** | Safety Stud Feature |
| **RB** | Raised Barrel* |
| **QC** | ElectroLynx® Hinge – 2, 4, 6, 8, 10 or 12 wire available |
| **CC** | Concealed Circuit – 2, 4, 6, 8, 10 or 12 wire available |
| **CC-18** | Concealed Circuit – 2, 4, 6, 8 or 10 wire available (2-18AWG wires and the remainder 28AWG wires) |
| **MM** | Magnetic Monitoring |

* Refer to page SP-3 for Raised Barrel.



*McKinney is a brand associated with Corbin Russwin, Inc., an ASSA ABLOY Group company. Copyright © 2012-2017, Corbin Russwin, Inc. All rights reserved. Reproduction in whole or in part without the express written permission of Corbin Russwin, Inc. is prohibited.*

# features

## door thickness

Patented (patent no. 6,131,970) door adjustable rose support plates allow the 5400LN to easily adjust to doors from 1-3/4" to 2" thick. It can also be used on 1-3/8" thick doors by adding two spacer plates P/N 14-5401-6644. For 2-1/4" thick doors, please specify door thickness on order.

## ANSI/BHMA

Certified ANSI/BHMA A156.2, Series 4000 Grade 1.

## fire listings

UL - cUL Fire Label for all door functions up to 3 hours.

Note: Any retrofit or other field modification to a fire rated opening can potentially impact the fire rating of the opening, and Yale Locks & Hardware makes no representations or warranties concerning what such impact may be in any specific situation. When retrofitting any portion of an existing fire rated opening, or specifying and installing a new fire-rated opening, please consult with a code specialist or local code official (Authority Having Jurisdiction) to ensure compliance with all applicable codes and ratings.

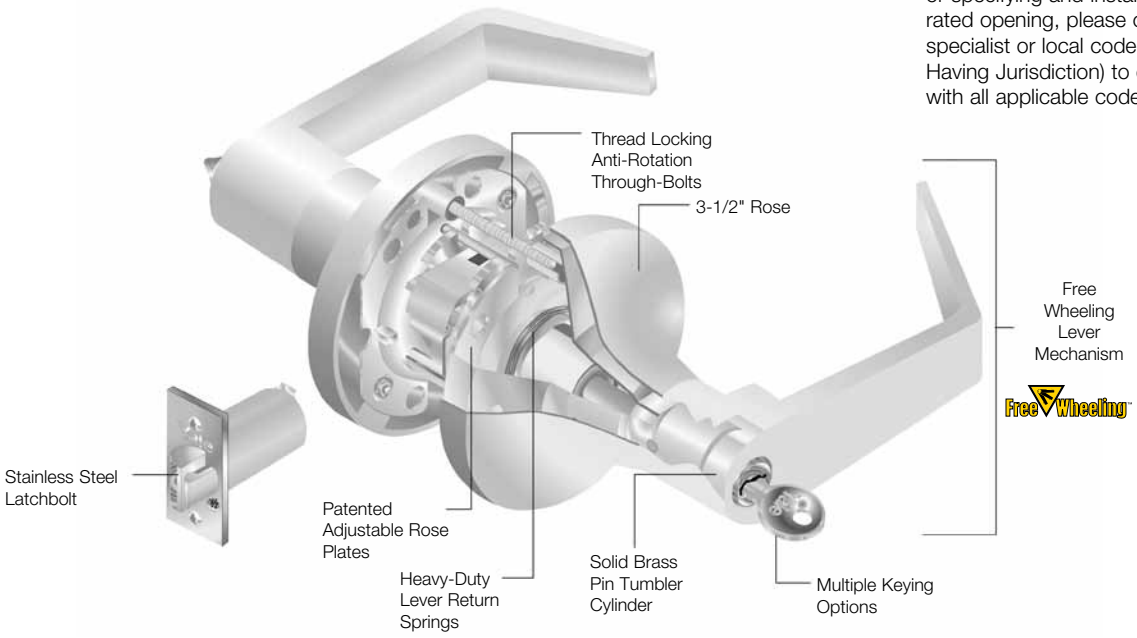


## full-featured grade 1 lever lockset offering

- Free Wheeling lever mechanism increases vandal resistance and reduces the amount of maintenance typically required of locksets with rigid levers.
- 13 finish options.
- 3 lever designs.
- 24 functions including electrified.
- Stainless steel latchbolt provides added strength and wear resistance. Direct 1/2" throw is standard.
- A 3/4" latch throw for fire-rated or pairs of doors is available.
- Wear-resistant plates in the chassis help extend the life of the lockbody and provide smoother lock operation.
- Longer thread locking through-bolts through the chassis provide greater stability and prevent rotation.
- Lifetime warranted heavy-duty lever return springs prevent lever sag and provide positive return of lever to horizontal position.
- Patented (patent no. 6,131,970) door adjustable rose support plates allow for easy adjustment of lockset to fit doors ranging in thickness from 1-3/4" to 2". Rose spacers available for 1-3/8" thick doors.
- Three non-handed lever options (Augusta, Monroe, and Pacific Beach) comply with ADA requirements for easy gripping and operation.
- Expanded cylinder and keying options:
  - Yale® 6- and 7-pin standard and interchangeable core cylinders including Yale® KeyMark® protected keyway cylinders (see page 11).
  - Standard cylinders with Schlage® C and Sargent® LA keyways. Small format interchangeable cores with Best® keyways.
  - Levers which accept interchangeable core cylinders by Best®, Schlage®, ASSA® and Medeco®.
- 3-1/2" roses cover ANSI/BHMA hollow metal door cutout.

# lever designs

## Augusta AU

**Lever:** Cast Zinc
**Rose:** Cold Forged Brass, Bronze

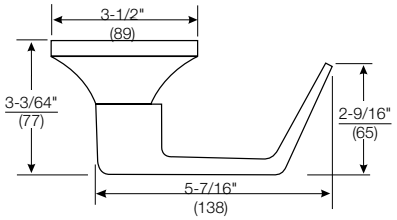


## Monroe MO

**Lever:** Cast Zinc
**Rose:** Cold Forged Brass, Bronze

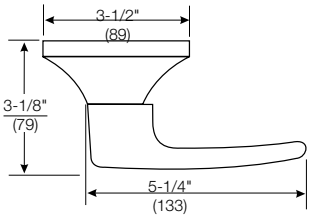


## Pacific Beach PB

**Lever:** Cast Zinc
**Rose:** Cold Forged Brass, Bronze

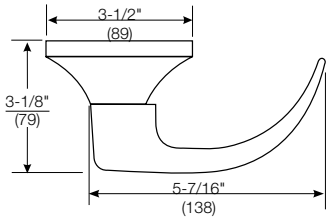


**Dimensions are shown in inches (millimeters).**

**See page 10 and 11 for interchangeable core cylinder order options.**

## functions

### 5401LN (F75)

**Passage or Closet Latch**
- For doors that do not require locking.
- Either lever operates latchbolt at all times.

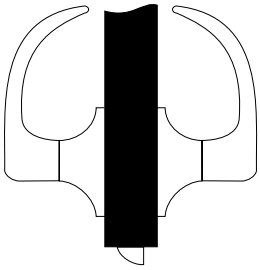

Outside Inside

### 5402LN (F76A)

**Privacy, Bedroom or Bath Lock**
- For lavatory or other privacy doors.
- Either lever operates latchbolt unless outside lever is locked by pushbutton inside.*
- Button automatically releases when inside lever is turned or door is closed.
- Emergency release in outside lever. Emergency key supplied. (PN 14-5302-1053-048)
- Inside lever always active.

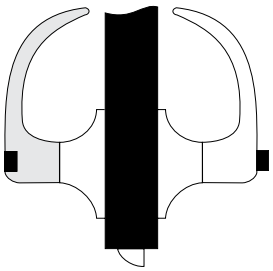

Outside Inside

### 5403LN (F77A)

**Patio or Privacy Lock**
- For exit doors with limited entry.
- Deadlocking latchbolt.
- Either lever operates latchbolt unless outside lever is locked by pushbutton inside.*
- Button automatically releases when inside lever is turned or door is closed.
- Inside lever always active.

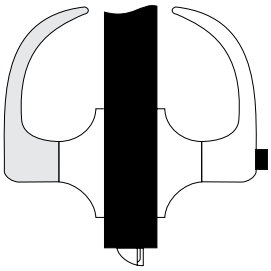

Outside Inside

### 5404LN (F82A)

**Entry Lock**
- For entrance or office doors.
- Deadlocking latchbolt.
- Either lever operates latchbolt (except when outside lever is locked from inside).*
- Pushing button in inside lever locks outside lever. (Automatically releases when inside lever is turned or key is rotated in locked outside lever.)
- Latchbolt is operated by key in outside lever or by rotating inside lever.
- Inside lever always active.

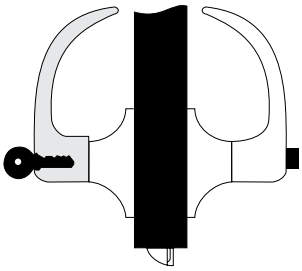

Outside Inside

### 5405LN (F86)

**Storeroom or Closet Lock**
- For use on storeroom, utility, and exit doors.
- Deadlocking latchbolt.
- Latchbolt operated by lever inside, key in outside lever.
- Outside lever always locked.*
- Inside lever always active.

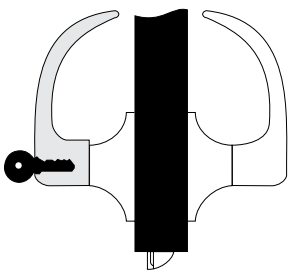

Outside Inside

### 5406LN (F92)

**Service Station Lock**
- Deadlocking latchbolt.
- Either lever operates latchbolt.
- Pushbutton in inside lever locks outside lever. (Automatically releases when inside lever is turned, door is closed or key is rotated in outside lever, except when slotted pushbutton is rotated 90° clockwise to retain outside lever in locked position.)*
- Latchbolt operated by key in outside lever, inside lever always active.

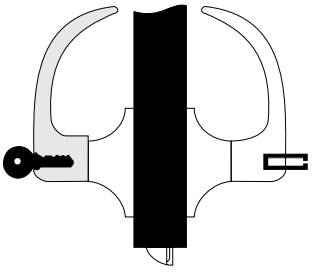

Outside Inside

*** Lever handles are Free-Wheeling in locked position. Shaded area denotes FreeWheeling lever.**

## functions

### 5407LN (F109)

**Entry Lock**
- For entrance, general home or office doors.
- Deadlocking latchbolt.
- Either lever operates latchbolt (except when outside lever is locked from inside).*
- Pushing turn button in inside lever locks outside lever, and automatically releases when inside lever is turned or key is rotated in locked outside lever.
- Outside lever may be retained in locked position by pushing and rotating turn button 90° clockwise to a horizontal position; not released until turn button is manually returned to the vertical position.
- Latchbolt is operated by key in outside lever or by rotating inside lever.
- Inside lever always active.

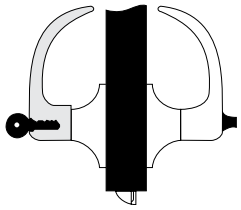

Outside Inside

### 5408LN (F84)

**Classroom Lock**
- For classroom or utility room doors.
- Deadlocking latchbolt.
- Either lever operates latchbolt (except when outside lever is locked by key).*
- Inside lever always active.
- Outside lever locked* or unlocked only by key.

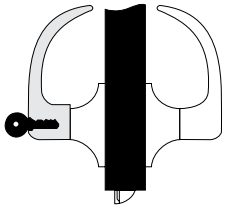

Outside Inside

### 5409LN (F89)

**Exit Latch**
- For exit doors with no-entry desired.
- Deadlocking latchbolt.
- Outside lever always locked.*
- Inside lever always active.

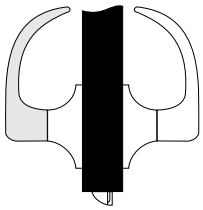

Outside Inside

### 5417LN (F88)

**Apartment, Exit or Public Toilet Lock**
- For office or apartment building entrance doors or lavatory doors.
- Deadlocking latchbolt.
- Either lever operates latchbolt (except when outside lever is locked by key from inside).*
- Key in outside lever operates latchbolt.
- Inside lever always active.

**NOTE: Inside handle requires 1802S standard 6-pin cylinder.**

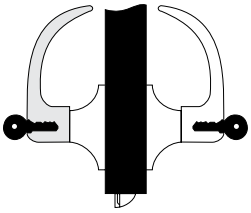

Outside Inside

### 5418LN (F110)

**Intruder Classroom Lock**
- For classroom doors.
- Deadlocking latchbolt.
- Either lever operates latchbolt (except when outside lever is locked by key from either side).
- Outside lever remains locked upon egress
- Inside lever always active.

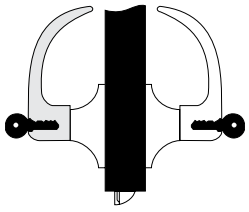

Outside Inside

### 5421LN (F80)

**Communicating Lock**
- For communicating or store entrance doors.
- Deadlocking latchbolt.
- Either lever operates latchbolt (except when key in either lever locks or unlocks the lever independently of the other).*
- Should be used only in offices or rooms with multiple entries.

**NOTE: Not available with IC core cylinders.**

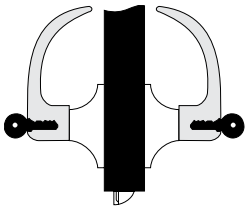

Outside Inside

*** Lever handles are Free-Wheeling in locked position. Shaded area denotes FreeWheeling lever.**

## functions

### 5422LN (F90)

**Corridor Lock**
- Deadlocking latchbolt.
- Either lever operates latchbolt (except when outside lever is locked by inside pushbutton or key in outside lever).* Inside lever always active.
- When locked by button, the button automatically releases when inside lever is turned or door is closed.
- When locked by key, the automatic release is made inoperative and must be manually unlocked by the key.*

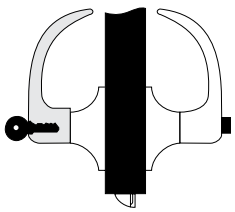

Outside Inside

### 5425LN

**Privacy Lock**
- For lavatory or other privacy doors.
- Either lever operates latchbolt (except when outside lever is locked by inside pushbutton).*
- Button automatically releases by turning inside lever or closing door.
- Door can be unlocked, when necessary, by operating outside turnbutton.
- No emergency key required.
- Optional flush turnbutton available for outside. Specify option "FTB"

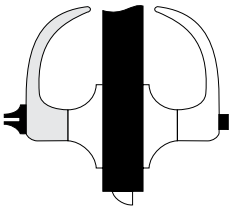

Outside Inside

### 5428LN (F111)

**Communicating Passage Lock**
- For twin communicating or exit doors where one side operation is required.
- Use where space is limited.
- Deadlocking latchbolt.
- One lever operation.
- Blank rose.
- Should be used only where rooms have more than one entrance.

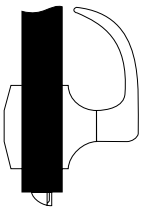

Outside Inside

### 5429LN (F113)

**Communicating Classroom Lock**
- For twin communicating or closet doors where one side operation or space between doors is limited.
- Deadlocking latchbolt.
- Blank rose.
- Inside lever operates latchbolt except when lever is locked by key.*
- Should be used only where rooms have more than one entrance.

**(Not available with IC core cylinders.)**

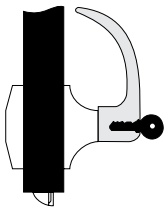

Outside Inside

### 5430LN (F87)

**Utility, Asylum or Institutional Lock**
- Deadlocking latchbolt.
- Latchbolt operated by key in lever from either side.
- Both levers always locked.*

**Note: Not available with IC core cylinders.**

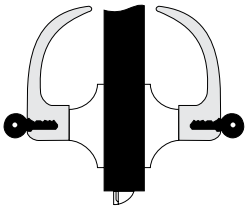

Outside Inside

### 5439LN (F112)

**Communicating Storeroom Lock**
- For twin communicating or closet doors where one side operation is required or space between doors is limited.
- Deadlocking latchbolt.
- Latchbolt operated by key only in inside lever.
- Inside lever always locked.*
- Blank rose.
- Should be used only where rooms have more than one entrance.

**(Note: Not available with I.C. core cylinders)**

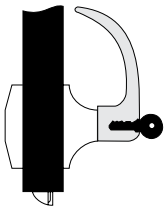

Outside Inside

### 455LN

**Dummy Trim**
- For non-operational lever used for decorative trim.

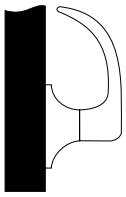

Outside Inside

### 455LN-D

**Double Dummy Trim**
- For non-operational lever used for decorative trim.

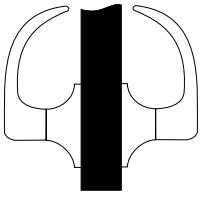

Outside Inside

*** Lever handles are Free-Wheeling in locked position. Shaded area denotes FreeWheeling lever.**

# securex®

## operation

Electric locks provide the ability to electrically lock or unlock the outside trim from a remote location. Fail Safe locks are commonly used in stair towers to release upon fire alarm activation. Fail Secure locks are used on perimeter doors or security doors to allow ingress using access control technologies (proximity cards, keypads, etc.)

## features

- Free Wheeling lever mechanism.
- Self-contained, continuous-duty integral solenoid (allows installation in standard cylindrical prep).
- Available Fail Safe or Fail Secure.
- Available in 12 or 24 volts DC.
- External rectifier available upon request for AC operation.
- Mechanical cylinder override.
- All 5400LN cylinder options.
- Certified ANSI/BHMA Grade 1.
- UL listed.
- 2-year limited warranty.

## REX

Request to Exit - Operating inside lever handle triggers REX switch which can be used to shunt an alarm, monitor egress or release a magnetic lock, etc.

## electrical specifications

- Continuous duty solenoid
  150 mA @ 24VDC
  300 mA @ 12VDC
- REX (SPDT) Contact Rating:
  3A @ 125 VAC
  2A @ 24 VDC

## electrolynx®

Yale® electrified 5400LN locks are equipped with *ElectroLynx* connectors. As a standard feature, these connectors link power from the incoming source to electrified locking products, including hinges, locks, exit devices, magnetic holders and strikes.

**Note: Electrified door hardware with *ElectroLynx* connectors requires a compatible number of lead wires attached to the door hinge.**

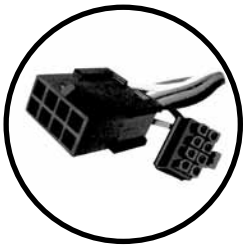

## functions

| Outside Inside | Function | Function Description |
|---|---|---|
| 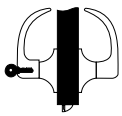 | 5490LN | **Fail Safe**<br>• Power on locks outside lever.<br>• Inside lever always active.<br>• Latchbolt retracted by key when locked electrically.<br>• Free Wheeling lever when locked electrically. |
| 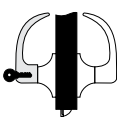 | 5491LN | **Fail Secure**<br>• Power on unlocks outside lever.<br>• Inside lever always active.<br>• Latchbolt retracted by key when power is off.<br>• Free Wheeling lever when power is off (locked). |

| Outside Inside | Function | Function Description |
|---|---|---|
| 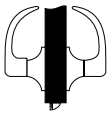 | 5480LN | **Fail Safe**<br>• Power on locks outside lever.<br>• Inside lever always active.<br>• Latchbolt retracted either side except when outside lever is locked electrically.<br>• Free Wheeling lever when locked electrically. |
| 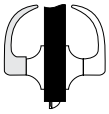 | 5481LN | **Fail Secure**<br>• Power on unlocks outside lever.<br>• Inside lever always active.<br>• Latchbolt retracted either side when power is off.<br>• Free Wheeling lever when power is off (locked). |

# securex® accessories

## BPS power supplies by securitron®

**Operation**

Power supplies are designed to provide reliable filtered and regulated power for long life to a variety of electrified hardware components.

**Product Features**

- Individual output circuit breakers
- Regulated and filtered fuse protected outputs
- LEDs monitor zone status (voltage or no voltage)
- Slide switches connect or disconnect load from power (Not available on 1 Amp supplies)
- Internal Back-Up battery charging circuit
- Rugged steel enclosure
- Fire alarm interface

**Listings**

- UL CLASS 2

**Applications (use with):**

- Fail Safe cylindrical locks
- Fail Secure cylindrical locks

**Ordering**

Ex: BPS-24-4, BPS-12-3

| Model | Input | Output | Application |
|---|---|---|---|
| BPS-24-1 | 120 VAC | 1 Amp @ 24 VDC | 2-5400LN |
| BPS-24-2 | 120 VAC | 2 Amp @ 24 VDC | 5-5400LN |
| BPS-24-4 | 120 VAC | 4 Amp @ 24 VDC | 11-5400LN |
| BPS-12-1 | 120 VAC | 1 Amp @ 12 VDC | 1-5400LN |
| BPS-12-3 | 120 VAC | 3 Amp @ 12 VDC | 3-5400LN |

**Consult factory for additional power supply applications.**

**Yale recommends McKinney®, Pemko and Securitron® for power transfer devices and other electronic accessories.**

## Securitron PowerJump™ ICPT

The Securitron PowerJump ICPT Inductive Coupling Power Transfer delivers power contactlessly and invisibly between the frame and door to power electrified hardware on the door. The PowerJump can be installed at the latch side or hinge side of the door and transfers up to 6 watts of power without pins or wires across the door gap, eliminating points of vulnerability and wear … and no need to core drill the door. The PowerJump is field selectable for 12VDC or 24VDC systems and is ideal for fail secure applications. The unit can hold electrified latches open in continuous duty or can momentarily energize the lockset for latch retraction.

Additional information regarding this product can be found at www.securitron.com.

# cylinders

## cylinder options

The following selection guide indicates the correct cylinder for each locking segment.

| Lockset Series: 5400LN | | Types of Cylinder Mechanisms | | | | | | | |
|---|---|---|---|---|---|---|---|---|---|
| | | Conventional | | Protected Keyway | | Security | | High Security | |
| Cylinder Types | Fixed Core | 6-pin | 7-pin | 6-pin | 7-pin | 6-pin | 7-pin | 6-pin | 7-pin |
| | Key-In-Lever | 1802 | 1802A | K402 | K402 | 5802 | 5802A | N/A | N/A |
| | **Interchangeable Core** | | | | | | | | |
| | LFIC | 1210 | 1220 | K800 | K800 | 5210 | 5220 | N/A | N/A |
| | SFIC | N/A | N/A | K600 | K600 | N/A | N/A | N/A | N/A |

Refer to Yale® KeyMark® and/or Cylinders and Keys Catalog sections for all details and how to order examples.

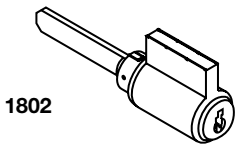

**1802**

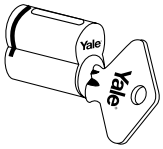


**1210**

## Yale® KeyMark®

For those applications requiring protected key control, Yale® KeyMark® cylinders guard against unauthorized key duplication. The *Yale KeyMark* Security Leg® keyway feature increases resistance against picking and impressioning and can easily retrofit into existing systems. For further details and availability, refer to the separate *Yale KeyMark* catalog.

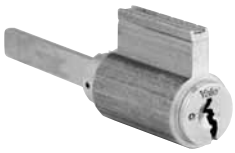

## security cylinders

Security cylinders contain two independent locking mechanisms. The first is a traditional 6- or 7-pin tumbler mechanism with spool drivers for greatly increased picking resistance.

The second is an innovative 5-tumbler rotating disc mechanism with sidebar engagement. The rotating discs are spring loaded and block the bottom of the keyway.

**Illustration**

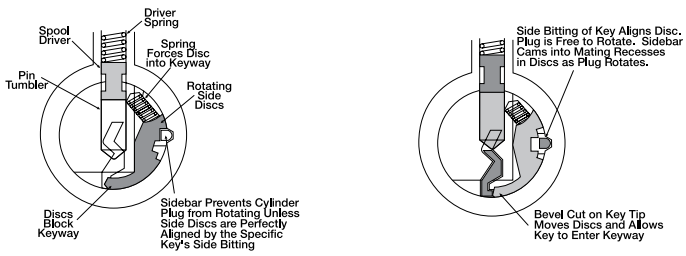

# cylinders

## 107S Schlage® cylinder adapter kit

Used to modify *Schlage* cylinder for fit in the 5400LN.
P/N 14-5407-0300-048

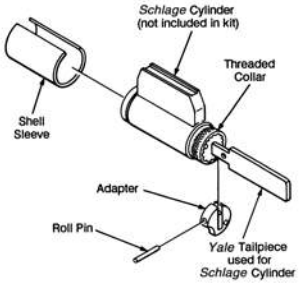


## other manufacturer keyway cylinders

| Illustration | Description | Model Number | Number of Pins |
|---|---|---|---|
| | Best® Keyway Cylinder. Available keyed random, master keyed or uncombinated. Specify keyway A, B, C, D, E, F, G, H, J, K, L or M. | A600 | 6 or 7 |
| 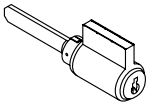 | Corbin Russwin “L4”, Corbin “60”, Russwin “D1”, Sargent® “LA” or Schlage® “E” Keyway. Specify keyway. Available keyed random. | 3804* | 6 |
| 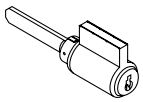 | Schlage® “C” Keyway. Available 0-bitted or keyed random. | 2802 | 6 |

***3804 cylinders require the 107S cylinder adapter kit to fit the 5400LN locksets. These cylinders are not ANSI/BHMA certified.**

## levers accepting SFIC and other manufacturers' large format interchangeable cores

| Description | Prefix | Number of Pins |
|---|---|---|
| SFIC (Accepts all Small Format Interchangeable Cores) | B<br>(i.e. B-AU, B-MO, B-PB) | 6 or 7 |
| Medeco®, ASSA® (LFIC) | M*<br>(i.e. M-AU) | 6 |
| Schlage® (LFIC) | SI<br>(i.e. SI-AU, SI-PB, SI-MO) | 6 |

***Medeco®, ASSA® option available only with AU lever. *(Note: For Medeco 32 series cores.)***
**LFIC = Large Format Interchangeable Core**
**SFIC = Small Format Interchangeable Core**

# latchbolts

## plain latchbolts

Model No. 693 supplied standard with all 5400LN series locksets without locking function. Standard plain latchbolt has a 2-1/4" (57mm) x 1-1/8" (29mm) beveled front with a 2-3/4" (70mm) backset and a 1/2" (13mm) bolt throw. Optional latchbolts with a greater backset/throw available to special order.

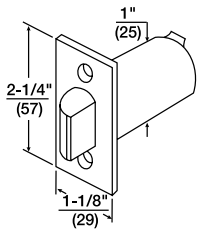


| Model No. | Front | Backset | Throw | Front Width | Latch Diameter |
|---|---|---|---|---|---|
| 693 | Beveled | 2-3/4" (70mm) | 1/2" (13mm) | 1-1/8" (29mm) | 1" (25mm) |
| F693 | Flat | 2-3/4" (70mm) | 1/2" (13mm) | 1-1/8" (29mm) | 1" (25mm) |
| 3693 | Beveled | 3-3/4" (95mm) | 1/2" (13mm) | 1-1/8" (29mm) | 1" (25mm) |

**Note: for 3/4" throw applications, only deadlocking latchbolts available.**

## deadlocking latchbolts

Deadlocking latchbolt Model No. 694 supplied standard with all 5400LN series locksets with locking function. Standard deadlocking latchbolt has a 2-1/4" (57mm) x 1-1/8" (29mm) beveled front with a 2-3/4" (70mm) backset and a 1/2" (13mm) bolt throw. Optional latchbolts with a greater backset/throw available to special order.

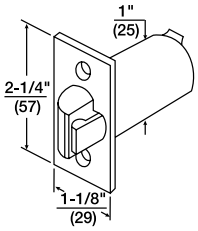


| Model No. | Front | Backset | Throw | Front Width | Latch Diameter |
|---|---|---|---|---|---|
| 694 | Beveled | 2-3/4" (70mm) | 1/2" (13mm) | 1-1/8" (29mm) | 1" (25mm) |
| F694 | Flat | 2-3/4" (70mm) | 1/2" (13mm) | 1-1/8" (29mm) | 1" (25mm) |
| 3694 | Beveled | 3-3/4" (95mm) | 1/2" (13mm) | 1-1/8" (29mm) | 1" (25mm) |
| 480B | Beveled | 2-3/4" (70mm) | 3/4" (19mm) | 1-1/8" (29mm) | 1" (25mm) |
| F480B | Flat | 2-3/4" (70mm) | 3/4" (19mm) | 1-1/8" (29mm) | 1" (25mm) |
| 3480B | Beveled | 3-3/4" (95mm) | 3/4" (19mm) | 1-1/8" (29mm) | 1" (25mm) |

**Note: For 2-3/8" backset, contact Customer Support.**

## backset extension links

All 5400LN Series locksets are supplied with standard latchbolts of 2-3/4" (70mm) backset; optional latchbolts with a 3-3/4" (95mm) backset are available to special order. Extension links are also available for attachment to 2-3/4" (70mm) or 3-3/4" (95mm) backset latchbolts to extend the backset to the desired length.

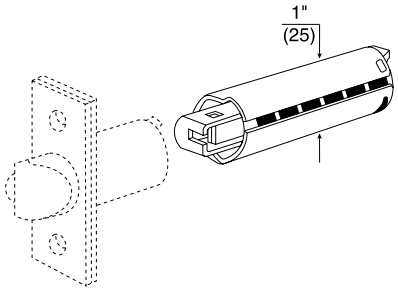


| Desired Backset | Latchbolt Backset | Order Extension List No. |
|---|---|---|
| 5" (127mm) | 2-3/4" (70mm) | 481DL |
| 6" (152mm) | 3-3/4" (95mm) | 481 |
| 7" (178mm) | 2-3/4" (70mm) | 482 |
| 8" (203mm) | 3-3/4" (95mm) | 482 |
| 18" (46cm) | 2-3/4" (70mm) | 484 |
| 19" (48cm) | 3-3/4" (95mm) | 484 |

**Other extension links up to 42" (1.06m) backset are available to special order.**

## attaching screws

(Not regularly supplied when latchbolts ordered separately).

- **For all latchbolts**
  #8-8-32 x 3/4" (19mm) Phillips flat head combination wood and machine screws
  Brass - P/N 81-2022-0416*
  Bronze - P/N 81-2032-0416*

- **Hollow Metal Doors**
  #8 - 32 x 1" (25mm) Phillips flat head machine screw
  Brass - P/N 81-0022-0420*
  Bronze - P/N 81-0032-0420*

***Specify finish required.**

## strikes

Yale® 5400LN locks are available with a variety of strike options. All strikes are located on the same vertical and horizontal center lines as the latchbolt. Some strikes are available in special lip lengths to accommodate varying thickness of doors and frames. To determine the proper length of the lip, measure from the center line of the strike to the edge of the jamb, accounting for any interfering trim (i.e. wood molding) and then add 1/4" (6mm) for curved lip. All strikes are reversible. Strikes are fabricated of either brass, bronze or stainless steel, depending on the lockset trim finish. When ordering strikes separately, specify the finish required.

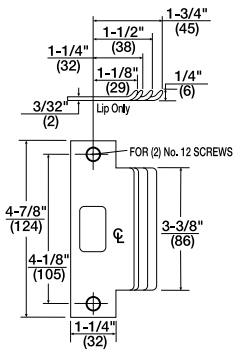


**Model No. 497 ANSI Strike (Standard)**
1-1/4" supplied standard. 1-1/8", 1-1/2", and 1-3/4" lip lengths available by special order. For door and frames with ANSI/ BHMA A156.115 preparations.

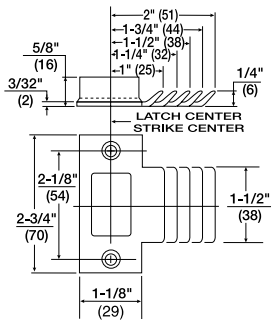


**Model No. 371 T-Strike (Optional)**
1-1/4" curved lip supplied standard. 1", 1-1/2", 1-3/4", and 2" curved lip lengths available by special order. Wrought strike box supplied.

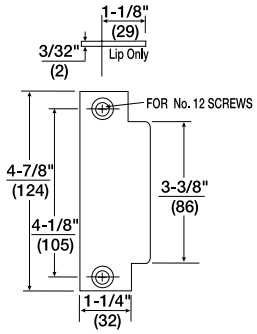


**Model No. 497B Blank ANSI Strike (Optional)**
Available to special order. Installed in frame with standard ANSI/BHMA A156.115 preparation to replace the strike when the lockset has been removed from the door.

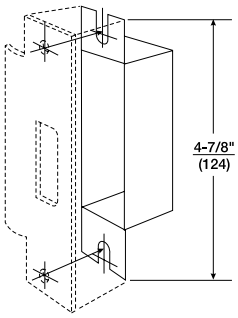


**Model No. 202 Strike Box for ANSI Strike (Optional)**
Specify 497 x 202

### attaching screws

(Not regularly supplied when strikes ordered separately).

**For Model No. 371 strike**
#8-8-32 x 3/4" (19mm) Phillips flat head combination wood and machine screw P/N-81-2012-0416.

**For Model No. 497 strike and 497B plate**
#12-12-24 x 1" (25mm) Phillips flat head combination wood and machine screw P/N-81-2012-0620.

**Note: When ordering strike plates or attaching screws individually, specify the finish required; i.e. 497 x 202 x 612; #81-2012-0620 x 612.**

## sample specification

All locksets shall be 5400LN Series Grade 1 cylindrical lever locksets as assembled by Yale Locks & Hardware.

Lockset chassis shall be constructed of heavy-gauge cold-rolled steel, trivalent chrome plated to protect against rust and corrosion. Locksets shall be adjustable to fit doors between 1-3/4" (44mm) to 2" (51mm) thick.

Locksets shall be non-handed, and shall install easily without the need for specialized installation tools. Locksets shall have separate anti-rotation throughbolts in the 6 o'clock and 12 o'clock position outside the 2-1/8" face bore, and shall have no exposed mounting screws.

Locksets shall have solid one-piece, cast levers without plastic inserts, and shall be a minimum of 5-1/4" in length. Levers shall operate independently, and shall have inside and outside lever return springs. Outside levers on the keyed locksets shall be removable only when the designated key is in the cylinder.

Locksets shall have the capability of accepting 7-pin standard, interchangeable core and high-security cylinders to provide expansion capacity for large master keyed systems.

Vandal resistant levers shall be offered as a standard feature in all locking functions, and shall be Free Wheeling in the locked condition. Locksets that are rigid in the locked condition or which must require resetting (breakaway) are not acceptable.

The latchbolt shall be made of stainless steel.

All locksets shall carry a comprehensive seven-year mechanical warranty. Locksets shall carry a lifetime warranty against lever sag or lever spring breakage.

All locksets shall comply with the following certifications:

- UL 3 Hour Fire Rating
- ANSI/BHMA A156.2 Series 4000, Grade 1
- ANSI A117.1 Accessibility Code
- ANSI/BHMA A156.115 or A156.115-W Preparation

**HW-043**
Revision Date:

## Lever Extension Flush Bolt No. 555

**Material:** Brass

**Finishes:** Available in standard architectural finishes (see page 9)

**Fastener:** 8 ea. #8 x 3/4" FH combo screws

**Features:**
- For Fire Rated Hollow Metal Swinging Doors measuring up to 4'w x 10'h rated up to and including 3 Hours
- Fits ANSI A115 door and frame preparation
- 3/4" bolt throw, 3/4" rod backset
- 12" rod length (center of face to bolt end - retracted)
- 1 1/2" adjustable bolt head

**Options:**
- Other size rods available are 18", 24", 36", 48"
- Extra long bolt head - 2 1/2" (or to your specification)
- Use No. 570 Dust Proof Strike (shown on page E4) to prevent dirt blocking bottom strike

| No. | Size | Weight | ANSI A156.16 |
|---|---|---|---|
| 555 | Face plate: 1" x 6 3/4"<br>Strike: 15/16" x 2 1/4"<br>Guide: 1" x 2" | 1.5 lbs./2 | L04251 |

## Lever Extension Flush Bolt with Bottom Fire Bolt No. 555 x 18BFB

**Material:** Flush bolt – brass
Bottom fire bolt – stainless steel

**Finishes:** Available in standard architectural finishes (see page 9)

**Fastener:** 8 ea. #8 x 3/4" FH combo screws

**Features:**
- For Fire Rated Hollow Metal Swinging Doors measuring up to 4'w x 9'h rated up to and including 3 Hours
- Fits ANSI A115 door and frame preparation
- 3/4" bolt throw, 3/4" rod backset
- 12" rod length (center of face to bolt end - retracted)
- 1 1/2" adjustable bolt head
- When door is subjected to 230°F the plug and black plastic cover will melt allowing the bolt to project, locking the leaves together
- Bottom fire bolt eliminates need for floor prep.
- Oversize fire bolt strike hole allows for slight door misalignment

**Options:**
- Other size rods available are 18", 24", 36", 48"
- Extra long bolt head – 2 1/2" (or to your specification)

| No. | Size | Weight |
|---|---|---|
| 555 x 18BFB | Top bolt: 1" x 6 3/4"<br>Bottom bolt: 13/16" dia. | 0.9 lbs. |

ASSA ABLOY

The global leader in door opening solutions



Copyright © 2012-2015, Rockwood Manufacturing Company, an ASSA ABLOY Group company. All rights reserved
Reproduction in whole or in part without the express written permission of Rockwood Manufacturing Company is prohibited.

# never compromise

The value of any product is equal to the quality of the labor and materials put into making it. And the Yale® 8800 series mortise lock is a perfect example that true quality doesn't just happen. Meticulous design and engineering have gone into manufacturing a mortise lock that brings you versatility as well as uncompromising strength and durability.

With quick lever handing and a patented (Patent No. 7,108,300) quick reversible latchbolt, lockset handing takes only seconds. Add a standard non-handed curved lip strike, and you have a no-hassle mortise lock that's quick and easy to install.

When it comes to strength, the Yale® 8800 series brings a new measure of security to the door. Its 1" throw stainless steel deadbolt extends further back into the reinforced steel case when in the locked position, providing added stability and resistance to abuse. Solid trim packages also provide deterrence to vandalism, making the 8800 series a prime player in your total opening security package.

For over 160 years, Yale Locks and Hardware has built a reputation on manufacturing products that exceed expectations of quality and reliability. The Yale 8800 series mortise lock is no exception, and to demonstrate that quality proves itself, we back it with a 10-year mechanical warranty.

We won't compromise, and neither should you.

## contents

Introduction . . . . . 2
Finishes . . . . . 2
Features . . . . . 3
SL8800 . . . . . 4
Facts and Figures . . . . . 5
Standard Lever Trim Installation . . . . 5
Standard Lever Trim . . . . . 6-10
8800RL Reflections® Trim . . . . . 11-12
Knob Trim . . . . . 13-14
Lockset Functions . . . . . 15-24
SecureX® Electrified . . . . . 25-27
SecureX® Electrified Accessories . . . . . 28
Cylinders . . . . . 29-31
Cylinder Collars . . . . . 32-38
Strikes . . . . . 39
Miscellaneous . . . . . 40
Occupancy Indicators . . . . . 41
How to Order . . . . . 42
Handing . . . . . 43

## 8800

The *Yale* 8800 series mortise lock is an industry standard product. Suitable for installation on doors 1-3/4" to 3-1/4" thick with standard trims, these products have a 1" throw stainless steel deadbolt. The latchbolt is 3/4" throw with stainless steel two-piece anti-friction camming action.

## finishes

The *Yale* 8800 series mortise lock is available in the trim finishes as listed. All knobs, lever handles, roses, escutcheons, cylinder collars and other exposed parts are fabricated of either brass, bronze, stainless steel or zinc and will be compatible with the finish ordered. When ordering, specify the finish required by the ANSI/BHMA Code Number only. When locksets are ordered with different trim finishes on each side, specify the outside finish first, i.e. COR8817-2 x 612 x 625. The front and strike finish will match the inside finish unless specified otherwise.

## camden escutcheon

8800 series locks with escutcheon trim are now provided standard with the Camden (CN) escutcheon. This zinc die cast escutcheon features one-piece casting for superior strength. Locks with this escutcheon are ANSI/BHMA certified operational and security Grade 1 and will retrofit to existing *Yale* escutcheon preps. The aesthetics of the CN escutcheon provide a design continuum with *Yale* exit device trim for a consistent look throughout the facility.

## windstorm

Certified (refer to local codes).

Hurricane

## warranty

*Yale* 8800 series mechanical mortise locks carry a ten (10) year warranty and 8800 series electrified mortise locks carry a two (2) year warranty.

| ANSI/ BHMA Code | Finish Description |
|---|---|
| 605 | Bright Brass, Clear Coated |
| 606 | Satin Brass, Clear Coated |
| 609 | Satin Brass, Blackened, Satin Relieved, Clear Coated |
| 611 | Bright Bronze, Clear Coated |
| 612 | Satin Bronze, Clear Coated |
| 613 | Dark Oxidized Satin Bronze, Oil Rubbed[1] |
| 616 | Satin Bronze, Blackened, and Satin Relieved, Clear Coated |
| 618 | Bright Nickel Plated, Clear Coated |
| 619 | Satin Nickel Plated, Clear Coated |
| 620 | Satin Nickel Plated, Blackened, Satin Relieved, Clear Coated |
| 625 | Bright Chrome Plated |
| 626 | Satin Chrome Plated MicroShield |
| 629 | Bright Stainless Steel |
| 630 | Satin Stainless Steel MicroShield |
| 693 | Black Painted |
| 722 | Black Oxidized Bronze, Oil Rubbed[2] |

1. New May 1, 2010
2. Formerly 613 prior to May 1, 2010

MicroShield **Finish available with MicroShield® antimicrobial coating, additional finishes by special application. Consult factory for availability.**

HW-044
Revision Date:

Yale®

# 8800 series | grade 1 mortise locks

## features

### A.D.A.
The 8800FL meets accessibility guidelines of the Americans with Disabilities Act and the requirements of the Uniform Federal Accessibility standards and ANSI 117.1, all requiring ease of accessibility for the handicapped.

### ANSI/BHMA
Certified ANSI/BHMA A156.13, Series 1000, Operational Grade 1 (8800FL with CN escutcheon & SL8800 meet Security Grade 1).

### bevel front
*Yale* 8800 series fronts are free-floating to adjust from flat to the standard bevel of 1/8" in 2".

### door thickness
8800 series mortise locks are supplied as standard for 1-3/4" thick doors. For other than standard, specify the door thickness on the order: (i.e. 2", 2-1/4", etc.)

### installations
8800 series mortise locks conform to ANSI/BHMA Specifications A156.115 which cover hardware preparations for steel doors and steel frames and A156.115-W which cover hardware preparations for wood doors with wood or steel frames.

### microshield®
8800 series locks are available with MicroShield® antimicrobial coating. *MicroShield* is a revolutionary hardware finish coating, using a silver ion based technology, which inhibits the growth of bacteria, algae, yeast, fungus, mold and mildew. *MicroShield* is non-toxic and lasts for the lifetime of the finish to which it is applied. To order, suffix option code “YMS”.

Note: *MicroShield*® coating may vary finish color from architectural standards. *MicroShield* is not intended as a substitute for traditional infection control programs such as hand hygiene or use of disinfectants. Coated product must still be cleaned to insure the surfaces will be free of destructive microbes. Yale Locks & Hardware makes no representations or warranties, express or implied, as to the efficacy of the *MicroShield* antimicrobial.

### ISO 9001
Designed and manufactured under a certified ISO 9001 quality system.

### knurled designs
Where required by the local authority, trim can be knurled to be identifiable to the touch for blind persons. All knob designs except CA may be ordered knurled; all lever designs except designer trim and Reflections® trim (pages 10 & 12) may be ordered knurled.

Only the outside knob or lever will be knurled or abrasive coated unless specified otherwise. To order a complete lockset knurled or abrasive coated, suffix the lockset model number with “Knurled” or “Abrasive Coated,” i.e. LF x CN8807 x “Knurled,” LF x CN8817-2 x “Knurled Inside Only,” AU x CN8828FL “Abrasive Coated.”

### lead shielding
All *Yale* 8800 series mortise locks are available with a lead shield for installation in lead-lined doors. To order, suffix the lockset model number with “lead-lined.”

### quick reversibility
*Yale* mortise locks with the same trim on both sides (knob x knob or lever x lever) are field reversible. These locks can be converted to accommodate the hand of the door. However, to reduce installation costs, it is recommended that the hand of the door be specified for each lockset ordered. If the hand of the door is not specified, RH will be furnished.

### underwriters laboratories (UL - cUL)
*Yale* 8800 series mortise locks have been listed by Underwriters Laboratories Inc. for use on fire doors having a rating up to and including 3 hours and for use on 20 minute wood doors. This pertains to single swing doors not exceeding 4 feet in width and 8 feet in height and in doors mounted in pairs not exceeding 8 feet in either direction (unless otherwise noted in the individual listings.)

In general, single-point mortise locks or latches with 3/4" minimum latch throw are intended for the active leaf of doors mounted in pairs, with the inactive leaf provided with top and bottom flush or surface bolts of the manual, automatic, or self-latching type. The door Classification Marking specifies the minimum latch throw required for the individual door.

*Yale* 8800 series mortise locks with 3/4" throw latchbolts may also be used on single swing doors rated 1-1/2 hours or less, up to 4 feet in width and 9 feet in height. This is in addition to the rating mentioned above. All *Yale* 8800 Series Mortise Locks with Lever Handle Trim are UL listed for fire door applications. Underwriters Laboratories does not list locks with rabbeted fronts, locks with deadbolt only, or locks with hold-back feature on the latchbolt.

Note: Any retrofit or other field modification to a fire rated opening can potentially impact the fire rating of the opening, and Yale Locks & Hardware makes no representations or warranties concerning what such impact may be in any specific situation. When retrofitting any portion of an existing fire rated opening, or specifying and installing a new fire-rated opening, please consult with a code specialist or local code official (Authority Having Jurisdiction) to ensure compliance with all applicable codes and ratings.

# facts and figures

## 8800/SL8800 series

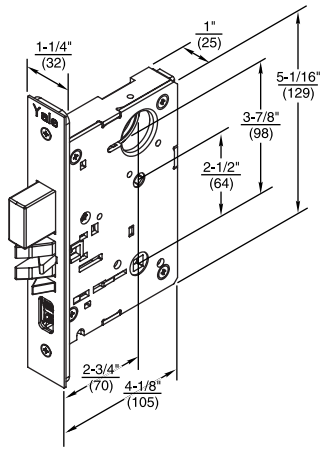


| |
|---|
| **Armor Front** - 8" x 1-1/4" |
| **Door Thickness** - 1-3/4" standard, to 3-1/4" thick doors to order when used with standard trim. To 2-1/4" thick doors when used with Reflections® trim. |
| **Deadbolt** - 1" throw, solid investment cast stainless steel. |
| **Latchbolt** - 3/4" throw, stainless steel two-piece anti-friction camming action. |
| **UL Listed** - for application on labeled fire doors. |
| **Backset** - 2-3/4" only. |
| **Case** - wrought steel, zinc dichromated. |
| **Hubs** - 3/8" solid steel, fine-blanked and heat treated for additional strength. |

## sectional lever installation

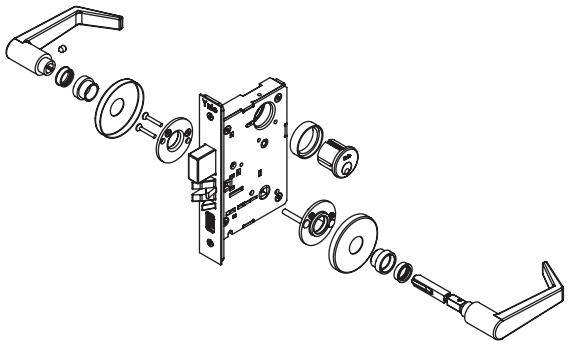

- All Yale® 8800FL series sectional lever trims feature through-bolted installation. This ensures positive alignment of the trim with the lock case and offers an attractive appearance.
- Outside trim is held in place by threaded posts. The posts fit through holes in the lock case and are secured by through-bolts from the inside trim.
- Since self-aligning trim is easy to install, on-the-job labor costs may be reduced.
- Each mortise lock ordered with lever trim features an internal heavy-duty spring cartridge which prevents lever sag.
- All *Yale* mortise lock trims are UL listed for fire door applications.
- A variety of sectional lever designs are available as shown on pages 6-12.

## escutcheon lever installation

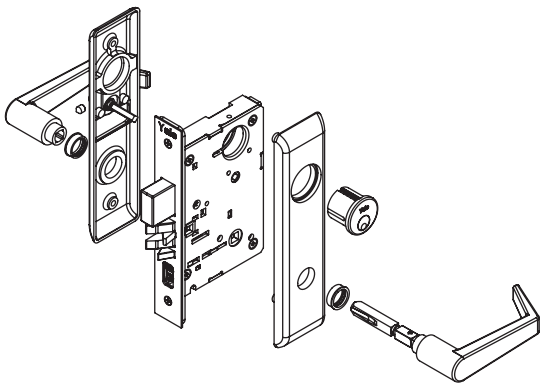

- All *Yale* 8800FL series escutcheon lever trims feature through-bolted installation.
- Outside trim is held in place by threaded posts. The posts fit through the door and are secured by through-bolts from the inside trim.
- *Yale* outside escutcheon trims have no visible screws – a great deterrent to vandalism.
- Each mortise lock ordered with lever trim features an internal heavy-duty spring cartridge which prevents lever sag.
- All *Yale* mortise lock trims are UL listed for fire door applications.
- A variety of escutcheon lever designs are available as shown on pages 6-12.

# cylinders

## conventional mortise cylinders

| Illustration | Model Number | Application | Cam | Length | |
|---|---|---|---|---|---|
| | | | | 6-Pin | 7-Pin |
| 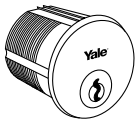 | 2153 | Standard cylinder | 2160 | 1-1/8"<br>1-1/4"<br>1-3/8"<br>1-1/2"<br>1-5/8"<br>1-3/4" | 1-1/4"<br>1-3/8"<br>1-1/2"<br>1-5/8"<br>1-3/4" |
| | 2153S | For inside operation of 8817-2 and 8834-2 functions only | 2130 | | |
| | 2123 | Cylinder for longer lengths | 2160 | 1-7/8" thru 3-1/2" in 1/8" increments* | |
| | 2123S | For inside operation of 8817-2 and 8834-2 functions only for longer lengths | 2130 | | |
| | 2719 | For hotel/motel locks 8820, 8827 and 8832 | 2160 | 1-3/8" | — |

*Contact Technical Product Support for cylinder collar requirements when ordering these cylinders separately. See pages 33-38 for other collar requirements.

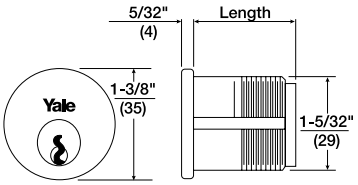


## interchangeable core mortise cylinders

| Cylinder Model Number | Application | Cam | Length | Pins | Housing Only Model Number | Core Only Model Number |
|---|---|---|---|---|---|---|
| 2196 | Standard Cylinder | 2160 | 1-1/2", 1-3/4", 2" | 6 | 2221 | 1210 |
| 2197 | Standard Cylinder | 2160 | 1-11/16", 2" | 7 | 2213 | 1220 |
| 2196H | For Hotel/Motel Locks 8820, 8827, 8832 | 2160 | 1-11/16" | 6 | 2213 | 1210H |
| 2196S | For inside operations of 8817-2 and 8834-2 functions | 2130 | 1-1/2" | 6 | 2214S | 1210 |
| 2197S | For inside operations of 8817-2 and 8834-2 functions | 2130 | 1-11/16" | 7 | 2217S | 1220 |

Note: When ordering interchangeable core cylinders or cores only, control keys are not furnished. If control keys are required they must be ordered separately.

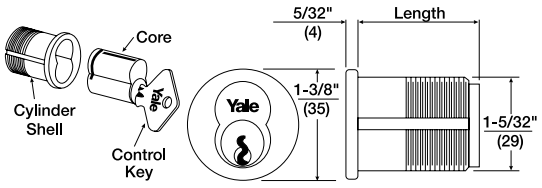

# cylinders

## security cylinders

Security cylinders contain two independent locking mechanisms. The first is a traditional 6- or 7-pin tumbler mechanism with spool drivers for greatly increased picking resistance.

The second is an innovative 5-tumbler rotating disc mechanism with sidebar engagement. The rotating discs are spring loaded and block the bottom of the keyway.

**Illustration**

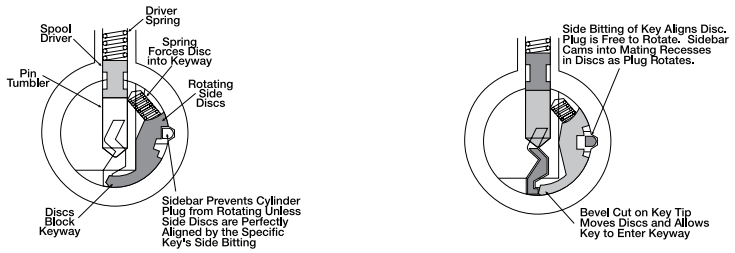


## security/high security mortise cylinders

| Model Number | Application | Cam | Length | |
|---|---|---|---|---|
| | | | 6-pin | 7-pin |
| 5153/U5153 | Standard Cylinder | 2160 | 1-1/8" 1-1/4" | 1-1/4" |
| 5153S/U5153S | For inside operations of 8817-2 and 8834-2 functions | 2130 | | |
| 5719/U5719 | For Hotel/Motel Locks 8820, 8827, 8832 | 2160 | 1-3/8" | |

## security interchangeable core mortise cylinders

| Cylinder Model Number | Application | Cam | Length | Pins | Housing Only Model Number | Core Only Model Number |
|---|---|---|---|---|---|---|
| 5196 | Standard Cylinder | 2160 | 1-1/2" | 6 | 2221 | 5210 |
| 5197 | Standard Cylinder | 2160 | 1-11/16" | 7 | 2213 | 5220 |
| 5196H | For Hotel/Motel Locks 8820, 8827, 8832 | 2160 | 1-11/16" | 6 | 2213 | 5210H |
| 5196S | For inside operations of 8817-2 and 8834-2 functions | 2130 | 1-1/2" | 6 | 2214S | 5210 |
| 5197S | For inside operations of 8817-2 and 8834-2 functions | 2130 | 1-11/16" | 7 | 2217S | 5220 |

Note: When ordering interchangeable core cylinders or cores only, control keys are not furnished. If control keys are required they must be ordered separately.

# cylinders

## Yale® KeyMark®

For those applications requiring protected key control, Yale® KeyMark® cylinders guard against unauthorized key duplication. The *Yale KeyMark* Security Leg® keyway feature increases resistance against picking and impressioning and can easily retrofit into existing systems. For further details and availability, refer to the separate *Yale KeyMark* catalog.

### Protected Keyway Mortise Cylinders

| Model Number | Type | Cam | Length | Pins | Housing Only Model Number | Core Only Model Number |
|---|---|---|---|---|---|---|
| K100 | Fixed Core Mortise | KC1 | 1-1/8", 1-1/4" 1-1/2", 1-3/4" 2" | 6 or 7 | N/A | N/A |
| K820 | Large Format IC Mortise | KC1 | 1-1/2", 1-3/4" 2" | 6 | K860 | K800 |
| | | | 1-11/16" 1-3/4", 2" | 7 | | |
| K620 | Small Format IC Mortise | KC1 | 1-1/4" | 6 | K660 | K600 |
| | | | 1-3/8", 1-3/4" | 6 or 7 | | |
| K630 | Small Format IC Mortise-Tapered | KC1 | 1-1/4" | 6 | K670 | K600 |
| | | | 1-3/8" | 6 or 7 | | |

Note: KC2 cam required for inside operation of 8817-2 and 8834-2 functions.

## miscellaneous cylinder

| Model Number | Application | Cam | Length |
|---|---|---|---|
| S2053S | Thumbturn cylinder, for inside operation of 8834-2 function only | 2130 | 1" 1-1/8" |
| S2053 | Thumbturn cylinder, for replacement of key operated cylinder. | 2160 | 1" 1-1/8" |

## cams

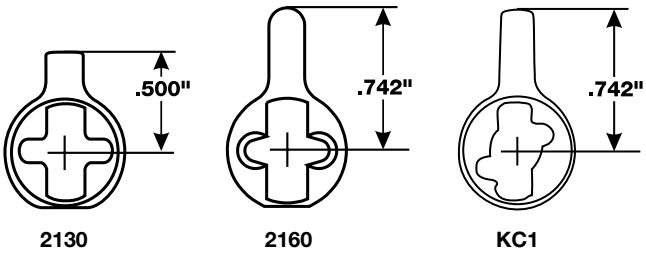


2130 2160 KC1

## other manufacturers keyway cylinders/cores

| Illustration | Model Number | Type | Cam | Length | Pins | Housing Only Model Number | Core Only Model Number |
|---|---|---|---|---|---|---|---|
| | A620 | Small Format IC Mortise, includes Best® Keyway Core. Available keyed random, master keyed or uncombinated. Specify keyway A, B, C, D, E, F, G, H, J, K, L or M. | KC1 | 1-1/4" | 6 | K660 | A600 |
| | | | | 1-3/8" 1-3/4" | 6 or 7 | | |
| | 2553 | Fixed Core Mortise Schlage® "C" Keyway Cylinder. Available 0-bitted or keyed random. | 2160 | 1-1/8" | 6 | N/A | N/A |

## cylinder collars

Cylinder collars are supplied as standard where required with those locksets supplied with cylinders. Collar size and thickness are supplied to suit the length of the cylinder, the thickness of the door and the trim ordered. (If door thickness is not specified, collars will be furnished for 1-3/4" (44mm) door.)

Collar length required must be specified for cylinders and/or housings ordered separately.

**1765 Recessed Cylinder Collar**
**"A" Dimension:** Thicknesses from 1/16" (2mm) to 1-15/32" (37mm) as required.
**Material:** Brass, Bronze

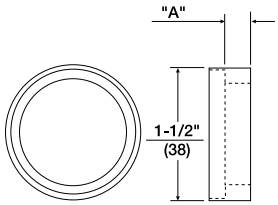


**1766 Tubular Spacer Collar**
**"A" Dimension:** 1/8"(3mm), 3/16" (5mm) and 5/16" (8mm)
**Material:** Brass, Bronze, Stainless Steel. (Used with U5153 and U5109 cylinders only.)

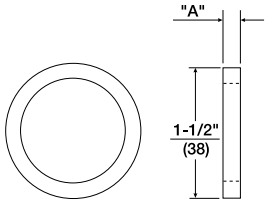


**KP3 Wave Washer**
(Furnished standard with 1765 collar for Yale® KeyMark® cylinders only).

**KP4 Flush Mount Cylinder Collar**
**Material:** Brass, Bronze

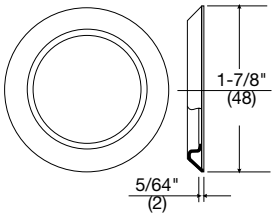

# collars for use with standard sectional and all Reflections® trims

| Door Thickness | Rose or Escutcheon Trim Design | No. of Pins | 2153, 2153S, 5153, 2123, 2123S Fixed Core Mortise Cylinders | | U5153, U5153S, H.S. Fixed Core Cylinders | | 2196, 2196S, 5196, 2197, 2197S, 5197 LFIC Cylinders | | 5719, 2719 Fixed Core Hotel/ Motel Cylinders | |
|---|---|---|---|---|---|---|---|---|---|---|
| | | | Cylinder Length | Collar Required | Cylinder Length | Collar Required | Cylinder Length | Collar Required | Cylinder Length | Collar Required |
| 1-3/4" (44) | CO, R1, R2, R3, R4, R5 | 6 | 1-1/8" | 1765.250 | 1-1/8" | No Collar | 1-1/2" | 1765.656 | 1-3/8" | 1765.531 |
| | | 6 or 7 | 1-1/4" | 1765.375 | 1-1/4" | 1766 | 1-11/16" | 1765.844 | | |
| | E1, E2, E3, E4 | 6 or 7 | 1-3/8" | 1765.531 | 1-3/8" | N/A | | | | |
| | | 6 or 7 | 1-1/2" | 1765.656 | 1-1/2" | N/A | | | | |
| 2" (51) | CO, R1, R2, R3, R4, R5 | 6 | 1-1/8" | 1765.125 | 1-1/8" | N/A | 1-1/2" | 1765.531 | 1-3/8" | 1765.531 |
| | | 6 or 7 | 1-1/4" | 1765.250 | 1-1/4" | No Collar | 1-11/16" | 1765.719 | | |
| | E1, E2, E3, E4 | 6 or 7 | 1-3/8" | 1765.375 | 1-3/8" | N/A | | | | |
| | | 6 or 7 | 1-1/2" | 1765.531 | 1-1/2" | N/A | | | | |
| 2-1/4" (57) | CO, R1, R2, R3, R4, R5 | 6 | 1-1/8" | KP4 | 1-1/8" | No Collar | 1-1/2" | 1765.375 | 1-3/8" | 1765.250 |
| | | 6 or 7 | 1-1/4" | 1765.125 | 1-1/4" | No Collar | 1-11/16" | 1765.563 | | |
| | E1, E2, E3, E4 | 6 or 7 | 1-3/8" | 1765.250 | 1-3/8" | N/A | | | | |
| | | 6 or 7 | 1-1/2" | 1765.375 | 1-1/2" | N/A | | | | |
| 2-1/2" (64) | CO, R1, R2, R3, R4, R5 | 6 | 1-1/8" | N/A | 1-1/8" | N/A | 1-1/2" | 1765.250 | 1-3/8" | 1765.125 |
| | | 6 or 7 | 1-1/4" | KP4 | 1-1/4" | No Collar | 1-11/16" | 1765.469 | | |
| | E1, E2, E3, E4 | 6 or 7 | 1-3/8" | 1765.125 | 1-3/8" | N/A | | | | |
| | | 6 or 7 | 1-1/2" | 1765.250 | 1-1/2" | N/A | | | | |
| 2-3/4" (70) | CO, R1, R2, R3, R4, R5 | 6 | 1-1/8" | N/A | 1-1/8" | N/A | 1-1/2" | 1765.125 | 1-3/8" | KP4 |
| | | 6 or 7 | 1-1/4" | N/A | 1-1/4" | N/A | 1-11/16" | 1765.344 | | |
| | E1, E2, E3, E4 | 6 or 7 | 1-3/8" | KP4 | 1-3/8" | N/A | | | | |
| | | 6 or 7 | 1-1/2" | 1765.125 | 1-1/2" | N/A | | | | |
| 3" (76) | CO, R1, R2, R3, R4, R5 | 6 | 1-1/8" | N/A | 1-1/8" | N/A | 1-1/2" | KP4 | 1-3/8" | N/A |
| | | 6 or 7 | 1-1/4" | N/A | 1-1/4" | N/A | 1-11/16" | 1765.187 | | |
| | E1, E2, E3, E4 | 6 or 7 | 1-3/8" | N/A | 1-3/8" | N/A | | | | |
| | | 6 or 7 | 1-1/2" | KP4 | 1-1/2" | N/A | | | | |
| 3-1/4" (83) | CO, R1, R2, R3, R4, R5 | 6 | 1-1/8" | N/A | 1-1/8" | N/A | 1-1/2" | N/A | 1-3/8" | N/A |
| | | 6 or 7 | 1-1/4" | N/A | 1-1/4" | N/A | 1-11/16" | 1765.062 | | |
| | E1, E2, E3, E4 | 6 or 7 | 1-3/8" | N/A | 1-3/8" | N/A | | | | |
| | | 6 or 7 | 1-1/2" | N/A | 1-1/2" | N/A | | | | |

N/A = Application Not Available

## collars for use with standard sectional and all Reflections® trims

| Door Thickness | Rose or Escutcheon Trim Design | No. of Pins | 5196H, 2196H Hotel/Motel LFIC Cylinders | | K100 Yale® KeyMark® Fixed Core Cylinders | | K820, K860 Yale® KeyMark® LFIC Cylinders | | K620, K630 K660, K670, A620, A630 Yale® KeyMark® and Best® Keyway SFIC Cylinders | |
|---|---|---|---|---|---|---|---|---|---|---|
| | | | Cylinder Length | Collar Required | Cylinder Length | Collar Required | Cylinder Length | Collar Required | Cylinder Length | Collar Required |
| 1-3/4" (44) | CO, R1, R2, R3, R4, R5 | 6 | 1-11/16" | 1765.844 | 1-1/8" | 1765.312 | 1-1/2" | 1765.656 | 1-1/4" | 1765.375 |
| | | 6 or 7 | | | 1-1/4" | 1765.375 | 1-11/16" | 1765.844 | 1-3/8" | 1765.563 |
| | E1, E2, E3, E4 | 6 or 7 | | | 1-1/2" | 1765.656 | | | | |
| | | 6 or 7 | | | | | | | | |
| 2" (51) | CO, R1, R2, R3, R4, R5 | 6 | 1-11/16" | 1765.719 | 1-1/8" | 1765.187 | 1-1/2" | 1765.563 | 1-1/4" | 1765.281 |
| | | 6 or 7 | | | 1-1/4" | 1765.281 | 1-11/16" | 1765.750 | 1-3/8" | 1765.469 |
| | E1, E2, E3, E4 | 6 or 7 | | | 1-1/2" | 1765.563 | | | | |
| | | 6 or 7 | | | | | | | | |
| 2-1/4" (57) | CO, R1, R2, R3, R4, R5 | 6 | 1-11/16" | 1765.563 | 1-1/8" | 1765.062 | 1-1/2" | 1765.406 | 1-1/4" | 1765.125 |
| | | 6 or 7 | | | 1-1/4" | 1765.125 | 1-11/16" | 1765.594 | 1-3/8" | 1765.312 |
| | E1, E2, E3, E4 | 6 or 7 | | | 1-1/2" | 1765.406 | | | | |
| | | 6 or 7 | | | | | | | | |
| 2-1/2" (64) | CO, R1, R2 | 6 | 1-11/16" | 1765.469 | 1-1/8" | N/A | 1-1/2" | 1765.281 | 1-1/4" | 1765.062 |
| | | 6 or 7 | | | 1-1/4" | 1765.062 | 1-11/16" | 1765.500 | 1-3/8" | 1765.187 |
| | E1, E2 | 6 or 7 | | | 1-1/2" | 1765.281 | | | | |
| | | 6 or 7 | | | | | | | | |
| 2-3/4" (70) | CO, R1, R2 | 6 | 1-11/16" | 1765.344 | 1-1/8" | N/A | 1-1/2" | 1765.187 | 1-1/4" | N/A |
| | | 6 or 7 | | | 1-1/4" | N/A | 1-11/16" | 1765.375 | 1-3/8" | 1765.062 |
| | E1, E2 | 6 or 7 | | | 1-1/2" | 1765.187 | | | | |
| | | 6 or 7 | | | | | | | | |
| 3" (76) | CO, R1, R2 | 6 | 1-11/16" | 1765.187 | 1-1/8" | N/A | 1-1/2" | 1765.062 | 1-1/4" | N/A |
| | | 6 or 7 | | | 1-1/4" | N/A | 1-11/16" | 1765.219 | 1-3/8" | N/A |
| | E1, E2 | 6 or 7 | | | 1-1/2" | 1765.062 | | | | |
| | | 6 or 7 | | | | | | | | |
| 3-1/4" (83) | CO, R1, R2 | 6 | 1-11/16" | 1765.062 | 1-1/8" | N/A | 1-1/2" | N/A | 1-1/4" | N/A |
| | | 6 or 7 | | | 1-1/4" | N/A | 1-11/16" | 1765.062 | 1-3/8" | N/A |
| | E1, E2 | 6 or 7 | | | 1-1/2" | N/A | | | | |
| | | 6 or 7 | | | | | | | | |

N/A = Application Not Available

# collars for use with standard escutcheon trim

| Door Thickness | Escutcheon Trim Design | No. of Pins | 2153, 2153S, 5153, 2123, 2123S Fixed Core Mortise Cylinders | | U5153, U5153S, H.S. Fixed Core Cylinders | | 2196, 2196S, 5196, 2197, 2197S, 5197 LFIC Cylinders | | 5719, 2719 Fixed Core Hotel/ Motel Cylinders | | 5196H, 2196H Hotel/Motel LFIC Cylinders | | K100 Yale® KeyMark® Fixed Core Cylinders | | K820, K860 Yale® KeyMark® LFIC Cylinders | | K620, K630 K660, K670, A620, A630 Yale® KeyMark® and Best® Keyway SFIC Cylinders | |
|---|---|---|---|---|---|---|---|---|---|---|---|---|---|---|---|---|---|---|
| | | | Cylinder Length | Collar Required | Cylinder Length | Collar Required | Cylinder Length | Collar Required | Cylinder Length | Collar Required | Cylinder Length | Collar Required | Cylinder Length | Collar Required | Cylinder Length | Collar Required | Cylinder Length | Collar Required |
| 1-3/4" (44) | Copenhagen (R) | 6 | 1-1/8" | 1765.156 | 1-1/8" | No Collar | 1-1/2" | 1765.563 | 1-3/8" | 1765.469 | 1-11/16" | 1765.750 | 1-1/8" | 1765.187 | 1-1/2" | 1765.594 | 1-1/4" | 1765.344 |
| | | 6 or 7 | 1-1/4" | 1765.312 | 1-1/4" | No Collar | 1-11/16" | 1765.750 | | | | | 1-1/4" | 1765.344 | 1-11/16" | 1765.844 | 1-3/8" | 1765.469 |
| | | 6 or 7 | 1-3/8" | 1765.469 | 1-3/8" | No Collar | | | | | | | 1-1/2" | 1765.594 | | | | |
| | | 6 or 7 | 1-1/2" | 1765.563 | 1-1/2" | No Collar | | | | | | | | | | | | |
| | Camden (CN) | 6 | 1-1/8" | No Collar | 1-1/8" | N/A | 1-1/2" | 1765.219 | 1-3/8" | 1765.094 | 1-11/16" | 1765.469 | 1-1/8" | No Collar | 1-1/2" | 1765.250 | 1-1/4" | No Collar |
| | | 6 or 7 | 1-1/4" | No Collar | 1-1/4" | N/A | 1-11/16" | 1765.406 | | | | | 1-1/4" | No Collar | 1-11/16" | 1765.469 | 1-3/8" | 1765.125 |
| | | 6 or 7 | 1-3/8" | 1765.094 | 1-3/8" | N/A | | | | | | | 1-1/2" | 1765.250 | | | | |
| | | 6 or 7 | 1-1/2" | 1765.219 | 1-1/2" | N/A | | | | | | | | | | | | |
| | SL | 6 | 1-1/8" | 1765.094 | 1-1/8" | N/A | 1-1/2" | 1765.469 | 1-3/8" | 1765.344 | 1-11/16" | 1765.656 | 1-1/8" | 1765.125 | 1-1/2" | 1765.500 | 1-1/4" | 1765.156 |
| | | 6 or 7 | 1-1/4" | 1765.219 | 1-1/4" | No Collar | 1-11/16" | 1765.656 | | | | | 1-1/4" | 1765.156 | 1-11/16" | 1765.719 | 1-3/8" | 1765.375 |
| | | 6 or 7 | 1-3/8" | 1765.375 | 1-3/8" | N/A | | | | | | | 1-1/2" | 1765.500 | | | | |
| | | 6 or 7 | 1-1/2" | 1765.500 | 1-1/2" | N/A | | | | | | | | | | | | |
| | Easton (CE) | 6 | 1-1/8" | 1765.062 | 1-1/8" | N/A | 1-1/2" | 1765.500 | 1-3/8" | 1765.375 | 1-11/16" | 1765.656 | 1-1/8" | 1765.125 | 1-1/2" | 1765.500 | 1-1/4" | 1765.156 |
| | | 6 or 7 | 1-1/4" | 1765.219 | 1-1/4" | No Collar | 1-11/16" | 1765.656 | | | | | 1-1/4" | 1765.156 | 1-11/16" | 1765.719 | 1-3/8" | 1765.375 |
| | | 6 or 7 | 1-3/8" | 1765.344 | 1-3/8" | N/A | | | | | | | 1-1/2" | 1765.500 | | | | |
| | | 6 or 7 | 1-1/2" | 1765.500 | 1-1/2" | N/A | | | | | | | | | | | | |
| | Lenoir (LN) | 6 | 1-1/8" | 1765.094 | 1-1/8" | N/A | 1-1/2" | 1765.531 | 1-3/8" | 1765.406 | 1-11/16" | 1765.750 | 1-1/8" | 1765.187 | 1-1/2" | 1765.563 | 1-1/4" | 1765.281 |
| | | 6 or 7 | 1-1/4" | 1765.281 | 1-1/4" | No Collar | 1-11/16" | 1765.750 | | | | | 1-1/4" | 1765.281 | 1-11/16" | 1765.750 | 1-3/8" | 1765.469 |
| | | 6 or 7 | 1-3/8" | 1765.406 | 1-3/8" | N/A | | | | | | | 1-1/2" | 1765.563 | | | | |
| | | 6 or 7 | 1-1/2" | 1765.531 | 1-1/2" | N/A | | | | | | | | | | | | |
| 2" (51) | Copenhagen (R) | 6 | 1-1/8" | KP4 | 1-1/8" | N/A | 1-1/2" | 1765.406 | 1-3/8" | 1765.312 | 1-11/16" | 1765.594 | 1-1/8" | 1765.094 | 1-1/2" | 1765.469 | 1-1/4" | 1765.219 |
| | | 6 or 7 | 1-1/4" | 1765.187 | 1-1/4" | No Collar | 1-11/16" | 1765.594 | | | | | 1-1/4" | 1765.219 | 1-11/16" | 1765.656 | 1-3/8" | 1765.344 |
| | | 6 or 7 | 1-3/8" | 1765.312 | 1-3/8" | N/A | | | | | | | 1-1/2" | 1765.469 | | | | |
| | | 6 or 7 | 1-1/2" | 1765.406 | 1-1/2" | N/A | | | | | | | | | | | | |
| | Camden (CN) | 6 | 1-1/8" | N/A | 1-1/8" | N/A | 1-1/2" | 1765.062 | 1-3/8" | N/A | 1-11/16" | 1765.250 | 1-1/8" | N/A | 1-1/2" | 1765.125 | 1-1/4" | No Collar |
| | | 6 or 7 | 1-1/4" | No Collar | 1-1/4" | No Collar | 1-11/16" | 1765.250 | | | | | 1-1/4" | No Collar | 1-11/16" | 1765.344 | 1-3/8" | No Collar* |
| | | 6 or 7 | 1-3/8" | N/A | 1-3/8" | N/A | | | | | | | 1-1/2" | 1765.125 | | | | |
| | | 6 or 7 | 1-1/2" | 1765.062 | 1-1/2" | N/A | | | | | | | | | | | | |
| | SL | 6 | 1-1/8" | N/A | 1-1/8" | N/A | 1-1/2" | 1765.344 | 1-3/8" | 1765.219 | 1-11/16" | 1765.531 | 1-1/8" | KP4 | 1-1/2" | 1765.375 | 1-1/4" | 1765.094 |
| | | 6 or 7 | 1-1/4" | 1765.094 | 1-1/4" | N/A | 1-11/16" | 1765.531 | | | | | 1-1/4" | 1765.094 | 1-11/16" | 1765.563 | 1-3/8" | 1765.250 |
| | | 6 or 7 | 1-3/8" | 1765.219 | 1-3/8" | N/A | | | | | | | 1-1/2" | 1765.375 | | | | |
| | | 6 or 7 | 1-1/2" | 1765.344 | 1-1/2" | N/A | | | | | | | | | | | | |
| | Easton (CE) | 6 | 1-1/8" | N/A | 1-1/8" | N/A | 1-1/2" | 1765.344 | 1-3/8" | 1765.219 | 1-11/16" | 1765.500 | 1-1/8" | KP4 | 1-1/2" | 1765.375 | 1-1/4" | 1765.094 |
| | | 6 or 7 | 1-1/4" | 1765.062 | 1-1/4" | N/A | 1-11/16" | 1765.500 | | | | | 1-1/4" | 1765.094 | 1-11/16" | 1765.563 | 1-3/8" | 1765.250 |
| | | 6 or 7 | 1-3/8" | 1765.219 | 1-3/8" | N/A | | | | | | | 1-1/2" | 1765.375 | | | | |
| | | 6 or 7 | 1-1/2" | 1765.344 | 1-1/2" | N/A | | | | | | | | | | | | |
| | Lenoir (LN) | 6 | 1-1/8" | No Collar | 1-1/8" | N/A | 1-1/2" | 1765.344 | 1-3/8" | 1765.187 | 1-11/16" | 1765.531 | 1-1/8" | No Collar* | 1-1/2" | 1765.406 | 1-1/4" | 1765.125 |
| | | 6 or 7 | 1-1/4" | 1765.094 | 1-1/4" | N/A | 1-11/16" | 1765.531 | | | | | 1-1/4" | 1765.125 | 1-11/16" | 1765.594 | 1-3/8" | 1765.312 |
| | | 6 or 7 | 1-3/8" | 1765.187 | 1-3/8" | N/A | | | | | | | 1-1/2" | 1765.406 | | | | |
| | | 6 or 7 | 1-1/2" | 1765.344 | 1-1/2" | N/A | | | | | | | | | | | | |

*Single Cylinder Only
N/A = Application Not Available
**Note: Copenhagen, Easton and Lenoir escutcheons discontinued. Information for reference only.**

| Door Thickness | Escutcheon Trim Design | No. of Pins | 2153, 2153S, 5153, 2123, 2123S Fixed Core Mortise Cylinders | | U5153, U5153S, H.S. Fixed Core Cylinders | | 2196, 2196S, 5196, 2197, 2197S, 5197 LFIC Cylinders | | 5719, 2719 Fixed Core Hotel/ Motel Cylinders | | 5196H, 2196H Hotel/Motel LFIC Cylinders | | K100 Yale® KeyMark® Fixed Core Cylinders | | K820, K860 Yale® KeyMark® LFIC Cylinders | | K620, K630 K660, K670, A620, A630 Yale® KeyMark® and Best® Keyway SFIC Cylinders | |
|---|---|---|---|---|---|---|---|---|---|---|---|---|---|---|---|---|---|---|
| | | | Cylinder Length | Collar Required | Cylinder Length | Collar Required | Cylinder Length | Collar Required | Cylinder Length | Collar Required | Cylinder Length | Collar Required | Cylinder Length | Collar Required | Cylinder Length | Collar Required | Cylinder Length | Collar Required |
| 2-1/4" (57) | Copenhagen (R) | 6 | 1-1/8" | N/A | 1-1/8" | N/A | 1-1/2" | 1765.344 | 1-3/8" | 1765.187 | 1-11/16" | 1765.500 | 1-1/8" | N/A | 1-1/2" | 1765.375 | 1-1/4" | 1765.094 |
| | | 6 or 7 | 1-1/4" | 1765.062 | 1-1/4" | N/A | 1-11/16" | 1765.500 | | | | | 1-1/4" | 1765.094 | 1-11/16" | 1765.531 | 1-3/8" | 1765.250 |
| | | 6 or 7 | 1-3/8" | 1765.187 | 1-3/8" | N/A | | | | | | | 1-1/2" | 1765.375 | | | | |
| | | 6 or 7 | 1-1/2" | 1765.344 | 1-1/2" | N/A | | | | | | | | | | | | |
| | Camden (CN) | 6 | 1-1/8" | N/A | 1-1/8" | N/A | 1-1/2" | N/A | 1-3/8" | No Collar | 1-11/16" | 1765.156 | 1-1/8" | N/A | 1-1/2" | N/A | 1-1/4" | N/A |
| | | 6 or 7 | 1-1/4" | N/A | 1-1/4" | N/A | 1-11/16" | 1765.156 | | | | | 1-1/4" | N/A | 1-11/16" | 1765.219 | 1-3/8" | No Collar* |
| | | 6 or 7 | 1-3/8" | No Collar | 1-3/8" | N/A | | | | | | | 1-1/2" | N/A | | | | |
| | | 6 or 7 | 1-1/2" | N/A | 1-1/2" | N/A | | | | | | | | | | | | |
| | SL | 6 | 1-1/8" | N/A | 1-1/8" | N/A | 1-1/2" | 1765.219 | 1-3/8" | 1765.062 | 1-11/16" | 1765.406 | 1-1/8" | N/A | 1-1/2" | 1765.250 | 1-1/4" | N/A |
| | | 6 or 7 | 1-1/4" | N/A | 1-1/4" | N/A | 1-11/16" | 1765.406 | | | | | 1-1/4" | N/A | 1-11/16" | 1765.469 | 1-3/8" | 1765.156 |
| | | 6 or 7 | 1-3/8" | 1765.062 | 1-3/8" | N/A | | | | | | | 1-1/2" | 1765.250 | | | | |
| | | 6 or 7 | 1-1/2" | 1765.219 | 1-1/2" | N/A | | | | | | | | | | | | |
| | Easton (CE) | 6 | 1-1/8" | N/A | 1-1/8" | N/A | 1-1/2" | 1765.219 | 1-3/8" | 1765.062 | 1-11/16" | 1765.406 | 1-1/8" | N/A | 1-1/2" | 1765.250 | 1-1/4" | N/A |
| | | 6 or 7 | 1-1/4" | N/A | 1-1/4" | N/A | 1-11/16" | 1765.406 | | | | | 1-1/4" | N/A | 1-11/16" | 1765.469 | 1-3/8" | 1765.156 |
| | | 6 or 7 | 1-3/8" | 1765.062 | 1-3/8" | N/A | | | | | | | 1-1/2" | 1765.250 | | | | |
| | | 6 or 7 | 1-1/2" | 1765.219 | 1-1/2" | N/A | | | | | | | | | | | | |
| | Lenoir* (LN) | 5 | 1-1/8" | N/A | 1-1/8" | No Collar | 1-1/2" | 1765.219 | 1-3/8" | No Collar | 1-11/16" | 1765.406 | 1-1/8" | No Collar | 1-1/2" | 1765.312 | 1-1/4" | 1765.062 |
| | | 6 | 1-1/4" | No Collar | 1-1/4" | No Collar | 1-11/16" | 1765.406 | | | | | 1-1/4" | 1765.062 | 1-11/16" | 1765.469 | 1-3/8" | 1765.187 |
| | | 6 or 7 | 1-3/8" | 1765.094 | 1-3/8" | No Collar | | | | | | | 1-1/2" | 1765.312 | | | | |
| | | 6 or 7 | 1-1/2" | 1765.219 | 1-1/2" | No Collar | | | | | | | | | | | | |
| 2-1/2" (64) | Copenhagen (R) | 6 | 1-1/8" | N/A | 1-1/8" | N/A | 1-1/2" | 1765.187 | 1-3/8" | 1765.062 | 1-11/16" | 1765.375 | 1-1/8" | N/A | 1-1/2" | 1765.219 | 1-1/4" | N/A |
| | | 6 or 7 | 1-1/4" | N/A | 1-1/4" | N/A | 1-11/16" | 1765.375 | | | | | 1-1/4" | N/A | 1-11/16" | 1765.406 | 1-3/8" | 1765.094 |
| | | 6 or 7 | 1-3/8" | 1765.062 | 1-3/8" | N/A | | | | | | | 1-1/2" | 1765.219 | | | | |
| | | 6 or 7 | 1-1/2" | 1765.187 | 1-1/2" | N/A | | | | | | | | | | | | |
| | Camden (CN) | 6 | 1-1/8" | N/A | 1-1/8" | N/A | 1-1/2" | No Collar | 1-3/8" | N/A | 1-11/16" | 1765.062 | 1-1/8" | N/A | 1-1/2" | No Collar | 1-1/4" | N/A |
| | | 6 or 7 | 1-1/4" | N/A | 1-1/4" | N/A | 1-11/16" | 1765.062 | | | | | 1-1/4" | N/A | 1-11/16" | 1765.062 | 1-3/8" | N/A |
| | | 6 or 7 | 1-3/8" | N/A | 1-3/8" | N/A | | | | | | | 1-1/2" | No Collar | | | 1-3/4" | 1765.187 |
| | | 6 or 7 | 1-1/2" | No Collar | 1-1/2" | N/A | | | | | | | | | | | | |
| | SL | 6 | 1-1/8" | N/A | 1-1/8" | N/A | 1-1/2" | 1765.062 | 1-3/8" | N/A | 1-11/16" | 1765.250 | 1-1/8" | N/A | 1-1/2" | 1765.125 | 1-1/4" | N/A |
| | | 6 or 7 | 1-1/4" | N/A | 1-1/4" | N/A | 1-11/16" | 1765.250 | | | | | 1-1/4" | N/A | 1-11/16" | 1765.312 | 1-3/8" | KP4 |
| | | 6 or 7 | 1-3/8" | N/A | 1-3/8" | N/A | | | | | | | 1-1/2" | 1765.125 | | | | |
| | | 6 or 7 | 1-1/2" | 1765.062 | 1-1/2" | N/A | | | | | | | | | | | | |
| | Easton (CE) | 6 | 1-1/8" | N/A | 1-1/8" | N/A | 1-1/2" | 1765.062 | 1-3/8" | N/A | 1-11/16" | 1765.250 | 1-1/8" | N/A | 1-1/2" | 1765.125 | 1-1/4" | N/A |
| | | 6 or 7 | 1-1/4" | N/A | 1-1/4" | N/A | 1-11/16" | 1765.250 | | | | | 1-1/4" | N/A | 1-11/16" | 1765.312 | 1-3/8" | KP4 |
| | | 6 or 7 | 1-3/8" | N/A | 1-3/8" | N/A | | | | | | | 1-1/2" | 1765.125 | | | | |
| | | 6 or 7 | 1-1/2" | 1765.062 | 1-1/2" | N/A | | | | | | | | | | | | |
| | Lenoir (LN) | 6 | 1-1/8" | N/A | 1-1/8" | N/A | 1-1/2" | 1765.094 | 1-3/8" | N/A | 1-11/16" | 1765.312 | 1-1/8" | N/A | 1-1/2" | 1765.156 | 1-1/4" | No Collar |
| | | 6 or 7 | 1-1/4" | N/A | 1-1/4" | N/A | 1-11/16" | 1765.312 | | | | | 1-1/4" | No Collar | 1-11/16" | 1765.375 | 1-3/8" | 1765.062 |
| | | 6 or 7 | 1-3/8" | No Collar | 1-3/8" | N/A | | | | | | | 1-1/2" | 1765.156 | | | | |
| | | 6 or 7 | 1-1/2" | 1765.094 | 1-1/2" | N/A | | | | | | | | | | | | |

*Single Cylinder Only
N/A = Application Not Available
**Note: Copenhagen, Easton and Lenoir escutcheons discontinued. Information for reference only.**

# collars for use with standard escutcheon trim

| Door Thickness | Escutcheon Trim Design | No. of Pins | 2153, 2153S, 5153, 2123, 2123S Fixed Core Mortise Cylinders | | U5153, U5153S, H.S. Fixed Core Cylinders | | 2196, 2196S, 5196, 2197, 2197S, 5197 LFIC Cylinders | | 5719, 2719 Fixed Core Hotel/ Motel Cylinders | | 5196H, 2196H Hotel/Motel LFIC Cylinders | | K100 Yale® KeyMark® Fixed Core Cylinders | | K820, K860 Yale® KeyMark® LFIC Cylinders | | K620, K630 K660, K670, A620, A630 Yale® KeyMark® and Best® Keyway SFIC Cylinders | |
|---|---|---|---|---|---|---|---|---|---|---|---|---|---|---|---|---|---|---|
| | | | Cylinder Length | Collar Required | Cylinder Length | Collar Required | Cylinder Length | Collar Required | Cylinder Length | Collar Required | Cylinder Length | Collar Required | Cylinder Length | Collar Required | Cylinder Length | Collar Required | Cylinder Length | Collar Required |
| 2-3/4" (70) | Copenhagen (R) | 6 | 1-1/8" | N/A | 1-1/8" | N/A | 1-1/2" | 1765.062 | 1-3/8" | N/A | 1-11/16" | 1765.250 | 1-1/8" | N/A | 1-1/2" | 1765.062 | 1-1/4" | N/A |
| | | 6 or 7 | 1-1/4" | N/A | 1-1/4" | N/A | 1-11/16" | 1765.250 | | | | | 1-1/4" | N/A | 1-11/16" | 1765.250 | 1-3/8" | N/A |
| | | 6 or 7 | 1-3/8" | N/A | 1-3/8" | N/A | | | | | | | 1-1/2" | 1765.062 | | | | |
| | | 6 or 7 | 1-1/2" | 1765.062 | 1-1/2" | N/A | | | | | | | | | | | | |
| | Camden (CN) | 6 | 1-1/8" | N/A | 1-1/8" | N/A | 1-1/2" | N/A | 1-3/8" | N/A | 1-11/16" | No Collar | 1-1/8" | N/A | 1-1/2" | N/A | 1-1/4" | N/A |
| | | 6 or 7 | 1-1/4" | N/A | 1-1/4" | N/A | 1-11/16" | No Collar | | | | | 1-1/4" | N/A | 1-11/16" | No Collar* | 1-3/8" | N/A |
| | | 6 or 7 | 1-3/8" | N/A | 1-3/8" | N/A | | | | | | | 1-1/2" | N/A | | | | |
| | | 6 or 7 | 1-1/2" | N/A | 1-1/2" | N/A | | | | | | | | | | | | |
| | SL | 6 | 1-1/8" | N/A | 1-1/8" | N/A | 1-1/2" | N/A | 1-3/8" | N/A | 1-11/16" | 1765.094 | 1-1/8" | N/A | 1-1/2" | KP4 | 1-1/4" | N/A |
| | | 6 or 7 | 1-1/4" | N/A | 1-1/4" | N/A | 1-11/16" | 1765.094 | | | | | 1-1/4" | N/A | 1-11/16" | 1765.187 | 1-3/8" | N/A |
| | | 6 or 7 | 1-3/8" | N/A | 1-3/8" | N/A | | | | | | | 1-1/2" | KP4 | | | | |
| | | 6 or 7 | 1-1/2" | N/A | 1-1/2" | N/A | | | | | | | | | | | | |
| | Easton (CE) | 6 | 1-1/8" | N/A | 1-1/8" | N/A | 1-1/2" | N/A | 1-3/8" | N/A | 1-11/16" | 1765.094 | 1-1/8" | N/A | 1-1/2" | KP4 | 1-1/4" | N/A |
| | | 6 or 7 | 1-1/4" | N/A | 1-1/4" | N/A | 1-11/16" | 1765.094 | | | | | 1-1/4" | N/A | 1-11/16" | 1765.187 | 1-3/8" | N/A |
| | | 6 or 7 | 1-3/8" | N/A | 1-3/8" | N/A | | | | | | | 1-1/2" | KP4 | | | | |
| | | 6 or 7 | 1-1/2" | N/A | 1-1/2" | N/A | | | | | | | | | | | | |
| | Lenoir* (LN) | 6 | 1-1/8" | N/A | 1-1/8" | N/A | 1-1/2" | 1765.062 | 1-3/8" | N/A | 1-11/16" | 1765.156 | 1-1/8" | N/A | 1-1/2" | 1765.062 | 1-1/4" | N/A |
| | | 6 or 7 | 1-1/4" | N/A | 1-1/4" | N/A | 1-11/16" | 1765.156 | | | | | 1-1/4" | N/A | 1-11/16" | 1765.219 | 1-3/8" | N/A |
| | | 6 or 7 | 1-3/8" | N/A | 1-3/8" | N/A | | | | | | | 1-1/2" | 1765.062 | | | | |
| | | 6 or 7 | 1-1/2" | 1765.062 | 1-1/2" | N/A | | | | | | | | | | | | |
| 3" (76) | Copenhagen (R) | 6 | 1-1/8" | N/A | 1-1/8" | N/A | 1-1/2" | N/A | 1-3/8" | N/A | 1-11/16" | 1765.094 | 1-1/8" | N/A | 1-1/2" | N/A | 1-1/4" | N/A |
| | | 6 or 7 | 1-1/4" | N/A | 1-1/4" | N/A | 1-11/16" | 1765.094 | | | | | 1-1/4" | N/A | 1-11/16" | 1765.156 | 1-3/8" | N/A |
| | | 6 or 7 | 1-3/8" | N/A | 1-3/8" | N/A | | | | | | | 1-1/2" | N/A | | | | |
| | | 6 or 7 | 1-1/2" | N/A | 1-1/2" | N/A | | | | | | | | | | | | |
| | | 6 or 7 | 1-5/8" | 1765.062 | 1-5/8" | N/A | | | | | | | | | | | | |
| | | 6 or 7 | 1-3/4" | N/A | 1-3/4" | N/A | | | | | | | | | | | | |
| | Camden (CN) | 6 | 1-1/8" | N//A | 1-1/8" | N/A | 1-1/2" | N/A | 1-3/8" | N/A | 1-11/16" | N/A | 1-1/8" | N/A | 1-1/2" | N/A | 1-1/4" | N/A |
| | | 6 or 7 | 1-1/4" | N/A | 1-1/4" | N/A | 1-11/16" | N/A | | | | | 1-1/4" | N/A | 1-11/16" | No Collar | 1-3/8" | N/A |
| | | 6 or 7 | 1-3/8" | N/A | 1-3/8" | N/A | | | | | | | 1-1/2" | N/A | | | | |
| | | 6 or 7 | 1-1/2" | N/A | 1-1/2" | N/A | | | | | | | | | | | | |
| | | 6 or 7 | 1-5/8" | N/A | 1-5/8" | N/A | | | | | | | | | | | | |
| | | 6 or 7 | 1-3/4" | No Collar | 1-3/4" | N/A | | | | | | | | | | | | |
| | SL | 6 | 1-1/8" | N/A | 1-1/8" | N/A | 1-1/2" | N/A | 1-3/8" | N/A | 1-11/16" | N/A | 1-1/8" | N/A | 1-1/2" | N/A | 1-1/4" | N/A |
| | | 6 or 7 | 1-1/4" | N/A | 1-1/4" | N/A | 1-11/16" | N/A | | | | | 1-1/4" | N/A | 1-11/16" | 1765.062 | 1-3/8" | N/A |
| | | 6 or 7 | 1-3/8" | N/A | 1-3/8" | N/A | | | | | | | 1-1/2" | N/A | | | | |
| | | 6 or 7 | 1-1/2" | N/A | 1-1/2" | N/A | | | | | | | | | | | | |
| | | 6 or 7 | 1-5/8" | N/A | 1-5/8" | N/A | | | | | | | | | | | | |
| | | 6 or 7 | 1-3/4" | 1765.062 | 1-3/4" | N/A | | | | | | | | | | | | |
| | Easton (CE) | 6 | 1-1/8" | N/A | 1-1/8" | N/A | 1-1/2" | N/A | 1-3/8" | N/A | 1-11/16" | N/A | 1-1/8" | N/A | 1-1/2" | N/A | 1-1/4" | N/A |
| | | 6 or 7 | 1-1/4" | N/A | 1-1/4" | N/A | 1-11/16" | N/A | | | | | 1-1/4" | N/A | 1-11/16" | 1765.062 | 1-3/8" | N/A |
| | | 6 or 7 | 1-3/8" | N/A | 1-3/8" | N/A | | | | | | | 1-1/2" | N/A | | | | |
| | | 6 or 7 | 1-1/2" | N/A | 1-1/2" | N/A | | | | | | | | | | | | |
| | | 6 or 7 | 1-5/8" | N/A | 1-5/8" | N/A | | | | | | | | | | | | |
| | | 6 or 7 | 1-3/4" | 1765.062 | 1-3/4" | N/A | | | | | | | | | | | | |
| | Lenoir (LN) | 6 | 1-1/8" | N/A | 1-1/8" | N/A | 1-1/2" | N/A | 1-3/8" | N/A | 1-11/16" | 1765.062 | 1-1/8" | N/A | 1-1/2" | No Collar | 1-1/4" | N/A |
| | | 6 or 7 | 1-1/4" | N/A | 1-1/4" | N/A | 1-11/16" | 1765.062 | | | | | 1-1/4" | N/A | 1-11/16" | 1765.125 | 1-3/8" | N/A |
| | | 6 or 7 | 1-3/8" | N/A | 1-3/8" | N/A | | | | | | | 1-1/2" | N/A | | | | |
| | | 6 or 7 | 1-1/2" | N/A | 1-1/2" | N/A | | | | | | | | | | | | |
| | | 6 or 7 | 1-5/8" | N/A | 1-5/8" | N/A | | | | | | | | | | | | |
| | | 6 or 7 | 1-3/4" | 1765.094 | 1-3/4" | N/A | | | | | | | | | | | | |

*Single Cylinder Only
N/A = Application Not Available
**Note: Copenhagen, Easton and Lenoir escutcheons discontinued. Information for reference only.**

| Door Thickness | Escutcheon Trim Design | No. of Pins | 2153, 2153S, 5153, 2123, 2123S Fixed Core Mortise Cylinders | | U5153, U5153S, H.S. Fixed Core Cylinders | | 2196, 2196S, 5196, 2197, 2197S, 5197 LFIC Cylinders | | 5719, 2719 Fixed Core Hotel/ Motel Cylinders | | 5196H, 2196H Hotel/Motel LFIC Cylinders | | K100 Yale® KeyMark® Fixed Core Cylinders | | K820, K860 Yale® KeyMark® LFIC Cylinders | | K620, K630 K660, K670, A620, A630 Yale® KeyMark® and Best® Keyway SFIC Cylinders | |
|---|---|---|---|---|---|---|---|---|---|---|---|---|---|---|---|---|---|---|
| | | | Cylinder Length | Collar Required | Cylinder Length | Collar Required | Cylinder Length | Collar Required | Cylinder Length | Collar Required | Cylinder Length | Collar Required | Cylinder Length | Collar Required | Cylinder Length | Collar Required | Cylinder Length | Collar Required |
| 3-1/4" (83) | Copenhagen (R) | 6 | 1-1/8" | N/A | 1-1/8" | N/A | 1-1/2" | N/A | 1-3/8" | N/A | 1-11/16" | 1765.062 | 1-1/8" | .. | 1-1/2" | .. | 1-1/4" | .. |
| | | 6 or 7 | 1-1/4" | N/A | 1-1/4" | N/A | 1-11/16" | N/A | | | | | 1-1/4" | .. | 1-11/16" | .. | 1-3/8" | .. |
| | | 6 or 7 | 1-3/8" | N/A | 1-3/8" | N/A | | | | | | | 1-1/2" | .. | | | | |
| | | 6 or 7 | 1-1/2" | N/A | 1-1/2" | N/A | | | | | | | | | | | | |
| | | 6 or 7 | 1-5/8" | N/A | 1-5/8" | N/A | | | | | | | | | | | | |
| | | 6 or 7 | 1-3/4" | 1765.062 | 1-3/4" | N/A | | | | | | | | | | | | |
| | | 6 or 7 | 1-7/8" | 1765.125 | 1-7/8" | N/A | | | | | | | | | | | | |
| | Camden (CN) | 6 | 1-1/8" | N//A | 1-1/8" | N/A | 1-1/2" | N/A | 1-3/8" | N/A | 1-11/16" | 1765.062 | 1-1/8" | .. | 1-1/2" | .. | 1-1/4" | .. |
| | | 6 or 7 | 1-1/4" | N/A | 1-1/4" | N/A | 1-11/16" | N/A | | | | | 1-1/4" | .. | 1-11/16" | .. | 1-3/8" | .. |
| | | 6 or 7 | 1-3/8" | N/A | 1-3/8" | N/A | | | | | | | 1-1/2" | .. | | | | |
| | | 6 or 7 | 1-1/2" | N/A | 1-1/2" | N/A | | | | | | | | | | | | |
| | | 6 or 7 | 1-5/8" | N/A | 1-5/8" | N/A | | | | | | | | | | | | |
| | | 6 or 7 | 1-3/4" | N/A | 1-3/4" | N/A | | | | | | | | | | | | |
| | | 6 or 7 | 1-7/8" | No Collar | 1-7/8" | N/A | | | | | | | | | | | | |
| | SL | 6 | 1-1/8" | N/A | 1-1/8" | N/A | 1-1/2" | N/A | 1-3/8" | N/A | 1-11/16" | 1765.062 | 1-1/8" | .. | 1-1/2" | .. | 1-1/4" | .. |
| | | 6 or 7 | 1-1/4" | N/A | 1-1/4" | N/A | 1-11/16" | N/A | | | | | 1-1/4" | .. | 1-11/16" | .. | 1-3/8" | .. |
| | | 6 or 7 | 1-3/8" | N/A | 1-3/8" | N/A | | | | | | | 1-1/2" | .. | | | | |
| | | 6 or 7 | 1-1/2" | N/A | 1-1/2" | N/A | | | | | | | | | | | | |
| | | 6 or 7 | 1-5/8" | N/A | 1-5/8" | N/A | | | | | | | | | | | | |
| | | 6 or 7 | 1-3/4" | N/A | 1-3/4" | N/A | | | | | | | | | | | | |
| | | 6 or 7 | 1-7/8" | 1765.062 | 1-7/8" | N/A | | | | | | | | | | | | |
| | Easton (CE) | 6 | 1-1/8" | N/A | 1-1/8" | N/A | 1-1/2" | N/A | 1-3/8" | N/A | 1-11/16" | 1765.062 | 1-1/8" | .. | 1-1/2" | .. | 1-1/4" | .. |
| | | 6 or 7 | 1-1/4" | N/A | 1-1/4" | N/A | 1-11/16" | N/A | | | | | 1-1/4" | .. | 1-11/16" | .. | 1-3/8" | .. |
| | | 6 or 7 | 1-3/8" | N/A | 1-3/8" | N/A | | | | | | | 1-1/2" | .. | | | | |
| | | 6 or 7 | 1-1/2" | N/A | 1-1/2" | N/A | | | | | | | | | | | | |
| | | 6 or 7 | 1-5/8" | N/A | 1-5/8" | N/A | | | | | | | | | | | | |
| | | 6 or 7 | 1-3/4" | N/A | 1-3/4" | N/A | | | | | | | | | | | | |
| | | 6 or 7 | 1-7/8" | 1765.062 | 1-7/8" | N/A | | | | | | | | | | | | |
| | Lenoir (LN) | 6 | 1-1/8" | N/A | 1-1/8" | N/A | 1-1/2" | N/A | 1-3/8" | N/A | 1-11/16" | 1765.062 | 1-1/8" | .. | 1-1/2" | .. | 1-1/4" | .. |
| | | 6 or 7 | 1-1/4" | N/A | 1-1/4" | N/A | 1-11/16" | N/A | | | | | 1-1/4" | .. | 1-11/16" | .. | 1-3/8" | .. |
| | | 6 or 7 | 1-3/8" | N/A | 1-3/8" | N/A | | | | | | | 1-1/2" | .. | | | | |
| | | 6 or 7 | 1-1/2" | N/A | 1-1/2" | N/A | | | | | | | | | | | | |
| | | 6 or 7 | 1-5/8" | N/A | 1-5/8" | N/A | | | | | | | | | | | | |
| | | 6 or 7 | 1-3/4" | No Collar | 1-3/4" | N/A | | | | | | | | | | | | |
| | | 6 or 7 | 1-7/8" | 1765.094 | 1-7/8" | N/A | | | | | | | | | | | | |

*Single Cylinder Only
**Consult Factory
N/A = Application Not Available
**Note: Copenhagen, Easton and Lenoir escutcheons discontinued. Information for reference only.**

## strikes

Yale® 8800 series mortise locks are supplied standard with a 2815 Curved Lip Strike with a 1-1/4" (32mm) lip length. The strike supplied will accommodate the locking function, i.e. latchbolt and/or deadbolt, and can be installed on doors 1-3/4" (44mm) thick. These strikes are non-handed.

**Longer/Shorter Lip Lengths:** Mortise Lock Strikes are mounted 3/8" above the center line of the lock. To determine the proper length of lip use the following formula:

1/2 of the door thickness, plus 1/16" inset, plus trim thickness, plus 1/8" for flat lip strike OR 1/4" for curved lip strike. Select the nearest available length.

**2815 Curved Lip:** 1-1/4" (32mm) regular; to special order, 1-1/8" (29mm), 1-3/8" (35mm), 1-1/2" (38mm), 1-5/8" (41mm), 1-3/4" (44mm), 1-7/8" (48mm), 2" (51mm), 2-1/8" (54mm), 2-3/8" (60mm)

**2816 Flat Lip:** To special order, 7/8" (22mm), 1" (25mm), 1-1/8" (29mm), 1-1/4" (32mm), 1-1/2" (38mm), 1-3/4" (44mm), 2" (51mm), 2-1/4" (57mm), 2-1/2" (64mm)

**Material:** Brass, Bronze, Stainless Steel.

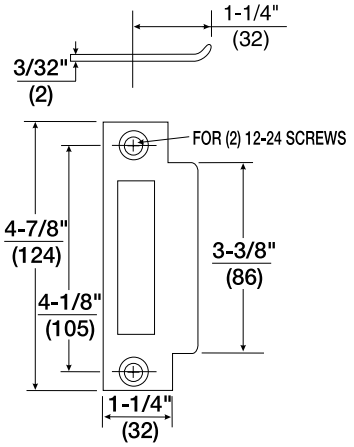


## optional strikes

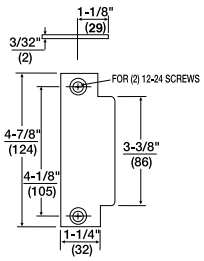


**497B ANSI Blank Filler Plate:** Reversible to replace a strike where a lock has been removed or where a frame with a strike preparation when no lock is installed on a door. Lip Lengths: 1-1/8" (29mm) only.
**Material:** Brass, Bronze, Stainless Steel.

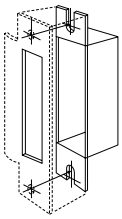

**202 Strike Box:** Reversible for installation with all Flat or Curved Lip Strikes. Available to special order only.
**Material:** Wrought Steel, Zinc Plated, Dichromated.

**718 Open Back Strike:** Field handable for a standard V-beveled pair of doors with a latchbolt only function on the active door. This strike permits emergency opening of the inactive door without damaging the lock mechanism. Available for doors 1-3/4" or 2-1/4" thick only. Specify the door thickness required.
**Material:** Stainless Steel, Black Nylon Coated.

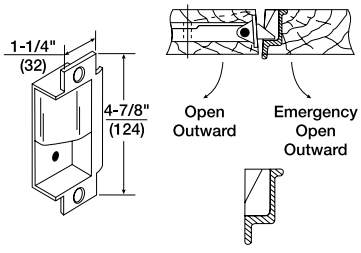

# miscellaneous

## rabbeted door kits

The Yale® 8800 series mortise lock can be installed on a pair of doors with a standard 1/2" (13mm) step rabbet. Kits are available which adapt these locks to the rabbeted doors. These kits contain a 1/2" (13mm) standard step rabbet strip for the active door, a strike, a strike box, and, depending on the door thickness, a strike lip. They are available for doors 1-3/4" (44mm), 2" (51mm) and 2-1/4" (57mm) thick. All components of these kits are reversible.

To order a complete *Yale* mortise lock with a Rabbet Door Kit, suffix the lock model number with a Rabbeted Door by door thickness, hand and finish required, i.e. AU8807 x Rabbeted Door x 1-3/4" x RH x 626.

Kits for rabbeted doors can be ordered by model number separately from the accompanying chart. When ordered separately, specify the finish required.

| Door Thickness | Rabbeted Door Kit Model No. | Strike Model No. |
|---|---|---|
| 1-3/4"<br>2" | RK245 | 22E |

These kits contain the above components plus a No. 22D strike lip with attaching screws for doors above 2".

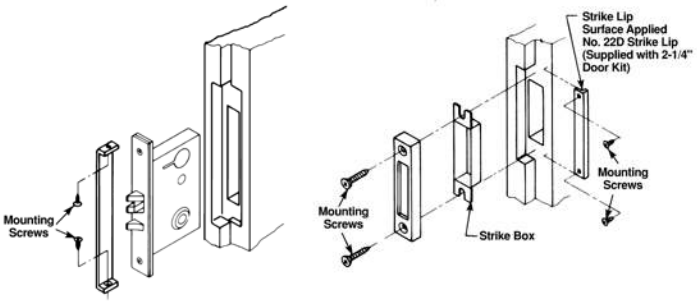


## miscellaneous trim design

**GF1824 Thumbturn and Round Plate**
Supplied as standard on all locks with round rose sectional trim or lock functions with no roses.
**Thumbturn:** Cast Zinc.
**Plate:** 1-7/8" (48mm) Diameter, Brass, Bronze, Simulated Stainless Steel.
GF1826-Plate Only - Used for outside of 8802 Privacy Lock.

## emergency key

**E203**
Used with 8802 privacy lock and 8862 bathroom lock for emergency access from outside.

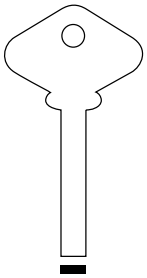

## attaching screws

**GF1824 and GF1826**
No. 6 x 3/8" (10mm) type “AB”, Oval Phillips Head sheet metal screw, stainless steel plated to match trim (P/N 81-3173-0308). Specify finish required.

# occupancy indicators

## privacy function indicator

This indicator can be ordered as an option with the 8802 (privacy) and 8862 (bathroom) functions. Available for all lever and knob trim designs.

The privacy occupancy indicator can be ordered with locksets by specifying IND as an option. It can be ordered separately as a retrofit kit for sectional trim by specifying model number IND-K and required finish and for escutcheon trim by specifying CN87 x 261 x finish.

When specifying option IND, the lockset will be provided with an indicator that shows the room is either occupied (OCC) when deadbolt is thrown or vacant (VAC) when deadbolt is retracted.

**Deadbolt Retracted**
**“Vacant”**

**Deadbolt Thrown**
**“Occupied”**

## cylinder function indicator

The cylinder indicator is standard with the 8864 (bathroom) function and can be ordered as an option with 8832 (hotel/motel), 8822 (dormitory) and 8818-2 (classroom security intruder) functions. Available for all lever and knob trim designs. Note: Cylinder indicator is not available for use with R1, R2, R3, R4, or R5 roses.

The cylinder occupancy indicator can be ordered with locksets by specifying IND as an option. It can be ordered separately as a retrofit kit for sectional trim by specifying model number CIND-K and required finish and for escutcheon trim by specifying CN87 x 260 x finish (without cointurn) or CN87 x 262 x finish (with cointurn). When ordered separately, cylinder not included.

**Thumbturn Retracted**
**“Vacant”**

**Thumbturn Thrown**
**“Occupied”**

**HW-045**
Revision Date:

# Heavy Duty Perimeter Gasketing - Head Section

- For the head section of the frame where a parallel arm closer bracket or other hardware is required. Supplied undrilled (36") or drilled (80" and above) and supplied with sheet metal screws for mounting
- If used as a stop, flat head machine screws can be provided upon request and take a countersunk #10 hole. PEMKO will drill the head member only if drilling instructions for countersink holes are provided
- All gasketing shown below is sold individually

## 2891_PK
AVAILABLE FINISHES: **A, D, G**
REPLACEMENT INSERT: **PK47 (BL, GR)**
ANSI: **R3G164, R3G165**

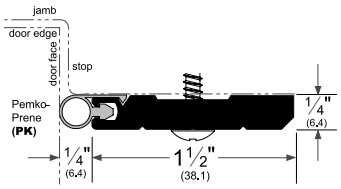


## 2891_S
AVAILABLE FINISHES: **A, D, G**
REPLACEMENT INSERT: **S3 (BL, GR, W)**
ANSI: **R3E164, R3E165**

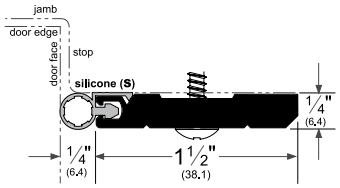


## 28945_NB
AVAILABLE FINISHES: **A, D, G**
REPLACEMENT INSERT: **P14050 (BL, GR)**
ANSI: **R3A164, R3A165**

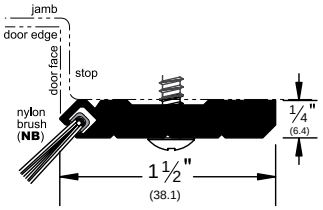


## 2891_V
AVAILABLE FINISHES: **A, D**
REPLACEMENT INSERT: **EV47 (BL, GR, W)**

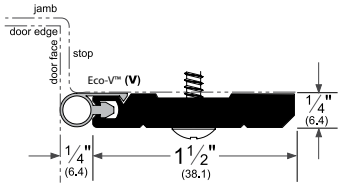


## 2892_V
AVAILABLE FINISHES: **A, D**
REPLACEMENT INSERT: **EV59 (BL, GR, W)**

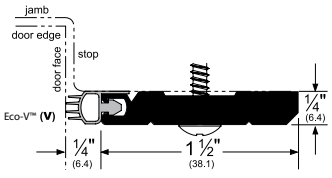


## 2893_V
AVAILABLE FINISHES: **A, D**
REPLACEMENT INSERT: **EV60 (GR)**

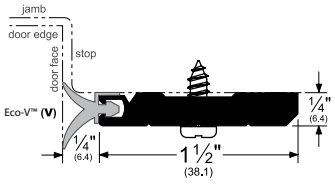


## 2891_PK
1 per door
standard

## 290_PK
2 per door
standard

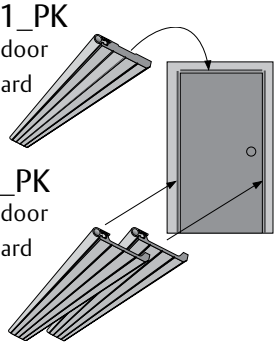

When ordering a head section such as 2891_PK, two corresponding side sections (i.e. 290_PK) should also be ordered for the latch and hinge sides of the frame.

NOTE: Products shown in this section may not be drawn to scale.
AVAILABLE FINISHES FOR PRODUCTS SHOWN ON THIS PAGE (see General Information section for finish chart)
**A** (Mill Finish Aluminum) **D** (Dark Bronze Anodized) **G** (Gold Anodized)
Special finishes available upon request



ASSA ABLOY

The global leader in door opening solutions

Copyright © 2015, Pemko Manufacturing Co., an ASSA ABLOY Group company. All rights reserved.
Reproduction in whole or in part without the express written permission of Pemko Manufacturing Co. is prohibited.

# "T" and Overlapping Astragals

## 359_

AVAILABLE FINISHES:
**A, BDG, D**

- Supplied with weatherstrip nails for installation

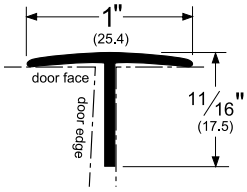


## 356_V

AVAILABLE FINISHES:
**A, BDG, D, PW, SN**
REPLACEMENT INSERT:
**EV17 (BL, GR, W)**

- Countersink drilling with countersunk flathead screws also available upon request at no extra charge

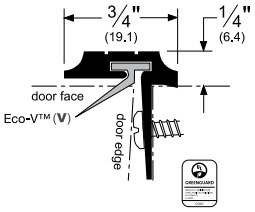


## 355_S

AVAILABLE FINISHES:
**B, BDG, C, D, G, PW, SN**
REPLACEMENT INSERT:
**S4 (BL, GR)**

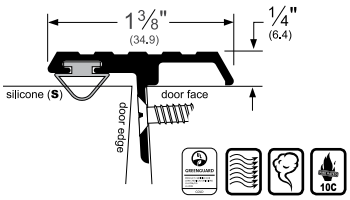


## Alternate Inserts For 355

### 355_V

AVAILABLE FINISHES:
**B, BDG, C, D, G, PW, SN**
REPLACEMENT INSERT:
**EV7 (BL, GR, W)**

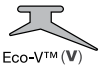


### 355_P

AVAILABLE FINISHES:
**B, BDG, C, D, G, PW, SN**
REPLACEMENT INSERT:
**P2 (BL, GR)**

## 357_
## 357_ND

AVAILABLE FINISHES:
**C, D, G, SP, SS** (#4 Finish & #4 Edge)

**11 GAUGE**

- "ND" denotes "no drill" (unless specified "ND", astragals are drilled)
- Standard fastener is #10 x 1" Truss Head SMS
- Lead-line option available

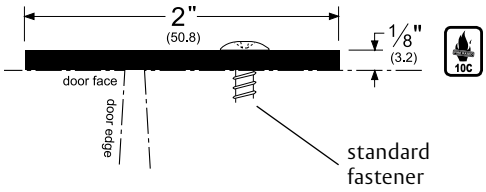


## 357_ with S88

AVAILABLE FINISHES:
**SP, SS** (#4 Finish & #4 Edge)

**11 GAUGE**

- Standard fastener is #10 x 1" Truss Head SMS
- 1/4" - 20 machine screws and thru-bolts must be ordered separately at additional cost
- S88 seal must be ordered separately at an additional cost, if required
- If specifications state that an astragal is required to satisfy a fire and / or smoke opening, then a thru-bolted 357SP or SS in conjunction with S88 seal is the only configuration that can be used.

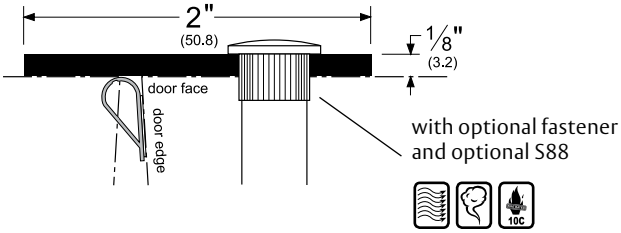


## 375_R

AVAILABLE FINISHES: **B, C, D, G**
REPLACEMENT INSERT: **R4 (BL)**
ANSI: **R3C634, R3C635**

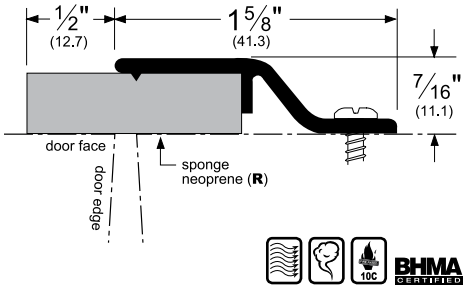


## 352_R

AVAILABLE FINISHES: **C, D, G**
REPLACEMENT INSERT: **R8 (BL)**
For reverse bevel doors

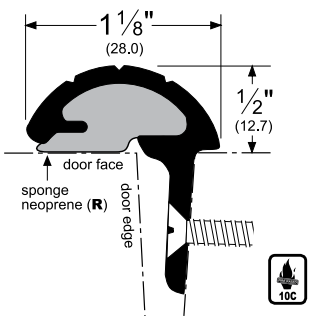


AVAILABLE FINISHES FOR PRODUCTS SHOWN ON THIS PAGE (see General Information section for finish chart)
**A** (Mill Finish Aluminum) **B** (Mill Finish Extruded Bronze [Brass]) **BDG** (Bright Dip Gold Anodized) **C** (Clear Anodized) **D** (Dark Bronze Anodized) **G** (Gold Anodized) **PW** (Painted White) **SN** (Satin Nickel Anodized) **SP** (Galvannealed Steel) **SS** (See Individual Part) Special finishes available upon request

Copyright © 2015, Pemko Manufacturing Co., an ASSA ABLOY Group company. All rights reserved.
Reproduction in whole or in part without the express written permission of Pemko Manufacturing Co. is prohibited.

ASSA ABLOY

The global leader in door opening solutions

HW-047

Revision Date:

# 8000 SERIES

## Architectural Door Closer

Norton®

ASSA ABLOY

ASSA ABLOY, the global leader in door opening solutions

## OVERVIEW

### Cutaway View

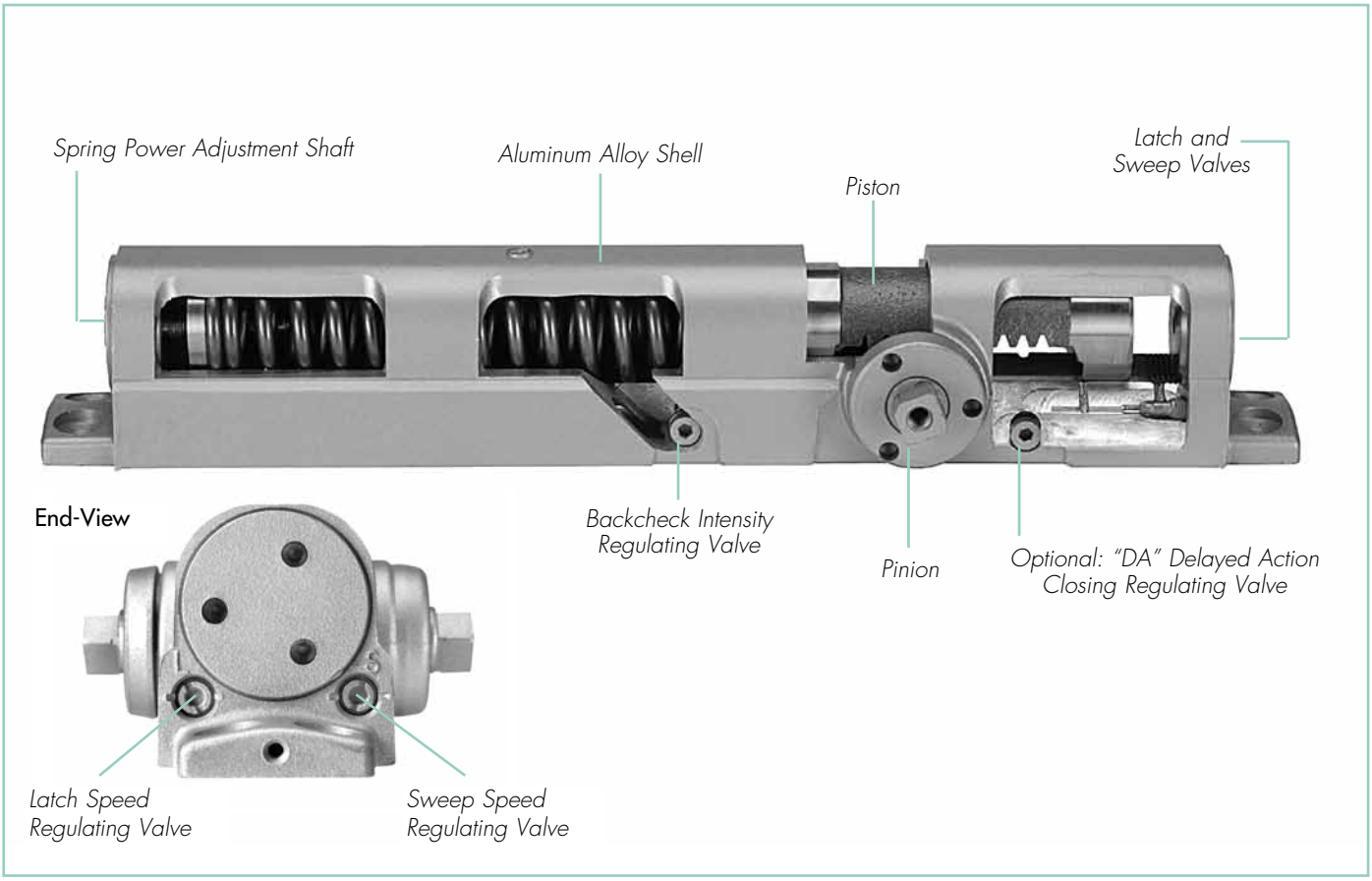


## COMPLIANCE STANDARDS

- ANSI/BHMA A156.4, Grade 1 certified
- UL / cUL listed for use on fire rated doors
- UL10C listed for positive pressure fire test
- 8301 and 8501 door closers are designed to comply with requirements for the Americans with Disabilities Act (A.D.A) and ANSI standard A117.1
- This product is manufactured in an ISO 9001 facility

**CAUTION: Door Closers for Low Opening Force Applications:**
Door closers installed in openings required to meet the requirements of The Americans with Disabilities Act or ANSI/BHMA Standard A117.1, when adjusted to meet those requirements, may not provide adequate closing power to dependably close and latch the door.


Copyright © 2002-2016 Yale Security Inc., an ASSA ABLOY Group company. All rights reserved.
Reproduction in whole or in part without the express written permission of Yale Security Inc. is prohibited.

## HOW TO ORDER

**HW-047**
Revision Date:

For optimum protection of door and frame assemblies, always use auxiliary wall, floor, or overhead door stop.

| Prefixes | 8<br>First Digit<br>Defines Closer Series | 3<br>Second Digit<br>Specifies Cover Option | 0<br>Third Digit<br>Specifies Type | 1<br>Fourth Digit<br>Specifies Closer Size | H<br>Suffix |
|---|---|---|---|---|---|

**Appearance Options**
1- without cover
3- closer with Slim Line cover
5- closer with Full cover

1 - Full Power Range Closer adjustable sizes 1 through 6 (also adjustable to comply with Accessibility Code Closer Requirements)

**No Prefix** } 8301/8501 series designates Tri-Style®

S - 8301/8501 regular arm application only, non-hold open
JS - 8301/8501 top jamb application only, non-hold open
P - 8301/8501 parallel arm application only, non-hold open 8381/8581 low profile closer
J - Top Jamb installation. 2-3/4 to 7" reveal - 150° swing
PR - Parallel rigid arm (parallel arm only - specify hand for hold open functions)
PRO - Parallel rigid arm with offset soffit plate (parallel arm only - specify hand for hold open applications)
PS - For push side mounted slide track only
R - Regular rigid heavy-duty arm (Torx® screws not included)
CLP - CloserPlus® arm (parallel arm only)
CPS - CloserPlus Spring™ arm (parallel arm only)
UNI - Unitrol® arm (parallel arm only - specify door width)
UNIJ - *Unitrol* arm (top jamb only - specify frame reveal)

0 - Specifies standard type arms for non-hold open, hold open closers
4 - Specifies low profile slide track
8 - Specifies a low profile arm for non-hold open closers only

**No Suffixes** - Standard non-hold open arm
H - Standard hold open arm
M - Metal cover; optional for series 8501 closers only (Specify hand for Top Jamb closer)
MLL - Lead lined metal cover
A - Optional Architectural Plastic cover (8501 only)
MA - Optional Architectural Metal cover (8501 only)
T - Thumbturn hold open on *CloserPlus* (CLP) & *CloserPlus Spring* (CPS) arms
DA - Adjustable delayed action closing optional. Available with adjustable backcheck cushioning for all series
ST - Slide track single lever arm (pull side standard. For push side prefix PS)
DE - Pull side slide track arm for double egress frame with reveal (Handed)
G - ABS cover
R - Ramp hold open on CloserPlus® arm

Notes:
- Warranty becomes void if door closer is installed on the exterior side of a door in the exterior wall of a building.
- It is strongly recommended, and required on fire door assemblies, that doors having a door closer be hung on ball bearing or anti-friction hinges or pivots; unless an alternate method is identified in the door manufacturer's listing.
- Failure to use the correct type and size fasteners may void factory warranty.
- Fasteners for fire/smoke door assemblies must conform to NFPA 80. In some applications additional fasteners may be mandated by NFPA 80 that are not shipped with standard *Norton* product, such as sleeve-nuts/sex nuts or through-bolts and grommet nuts.
- Sizing charts provided on pages 13-25 are based on 1-3/4" (44mm) x 7' (2.13m) standard weight doors swinging to 110°. Other conditions (such as door height or weight; or wind/draft conditions) may require a larger size closer.


Copyright © 2002-2016 Yale Security Inc., an ASSA ABLOY Group company. All rights reserved.
Reproduction in whole or in part without the express written permission of Yale Security Inc. is prohibited.

## FEATURES

### Aluminum Alloy Housing
Closer bodies are constructed of a special aluminum alloy, carefully selected to accommodate interactive steel components and operating conditions.

### Rack & Pinion Operation
Provides a smooth constant control of the door through its full opening and closing cycle. 180° door swing can be achieved when door, frame, hardware and arm function do not interfere.

### Non-handed
With few exceptions all series 8301/8501 door closers are non-handed and can be installed on either right- or left-hand swing doors. Pinion shaft extends vertically through the closer body in both directions. Some options, as noted on pages 6-7, will require that the hand of the closer be specified.

### Sweep Speed Control Valve
Allows adjustment of door speed from the door's full open position down to approximately 10° from the closed position.

### Latch Speed Control Valve
Allows adjustment of door speed from approximately 10° down to the door's fully closed position.

### Tri-Style®
8301/8501 comes with screws, brackets and soffit plates to allow for regular, top jamb, and parallel arm installations.

### Adjustable Backcheck Valve
Provides control of the door in the opening cycle, beginning at approximately 75° of door opening. It cushions the door opening when the door is forcibly opened beyond its pre-adjusted limits.

### Standard Molded Covers
Molded of high-impact U.L. listed material. These covers are non-handed for all applications.

### Warranty
Limited 25-year warranty for defects and life of the building on the aluminum housing.

### Closer Fluid
NorGlide® closer fluid is a specially formulated multi-viscosity hydraulic fluid that contains lubricity and anti-oxidation agents that provide optimum performance and efficiency. This fluid complements the interaction of the door closer's aluminum housing with its steel and brass components, while maintaining stable viscosity to allow the door closer to perform in temperatures ranging from extremely high to as low as -40° F.

### Door Closer Power Options

### Series 8301/8501 Multi-Sized Door Closer
Adjustable through the power range of sizes 1 through 6; as outlined in ANSI/BHMA specification A156.4 option PT 4H.

Closers will also comply with the opening force requirements as outlined in the Americans with Disabilities Act (ADA) and ANSI/BHMA standard A117.1 for interior doors.

## OPTIONAL FEATURES COVERS

### Optional Metal Cover
This steel cover is non-handed for regular and parallel arm applications, but is handed for top jamb applications. Cover is available in sprayed or plated finishes.

### Optional Architectural Covers *
**Plastic** Architectural plastic covers are molded of high-impact U.L. listed material. They are non-handed and available in sprayed finishes.

**Metal** The architectural metal covers are steel and non-handed for all applications. These covers are available in sprayed or plated finishes.

### Optional ABS Cover
Consult factory for details


Copyright © 2002-2016 Yale Security Inc., an ASSA ABLOY Group company. All rights reserved.
Reproduction in whole or in part without the express written permission of Yale Security Inc. is prohibited.

## OPTIONAL FEATURES

### Adjustable Delayed Action Closing

An optional hydraulic feature that adds a third speed range to the closing cycle. This feature becomes effective when the door is opened and released at any point beyond 70°. The amount of time delay depends upon the combination of the angle of door release and valve adjustment. The valve can be adjusted with a 1/8" (3mm) hex key from no delay time up to maximum delay times of:

| Door Opened | Approximate Time of Delay Cycle |
|---|---|
| 180° | 4-5 minutes |
| 120° | 2-3 minutes |
| 90° | 25-30 seconds |

### Pressure Relief Safety Valve

The delayed action hydraulic system contains a pressure relief valve. Any time the door is forced toward the closed direction while it is in the closing cycle, the valve will open and permit the door to close. This prevents damage to door, frame and closer.

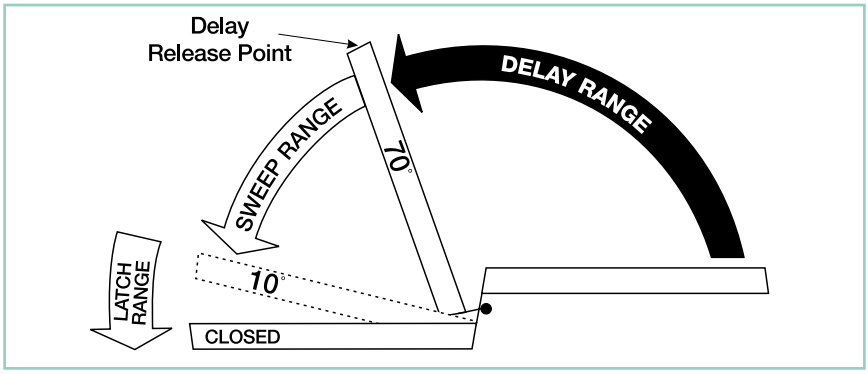


### Suggested Applications

Delayed Action closing allows slow-moving traffic to clear the opening before the door closer's normal closing cycle begins. This feature can be helpful in health care facilities such as hospitals and nursing homes. It provides sufficient time for persons on crutches or in wheelchairs to pass through a door without concern of it closing. At the same time, it can accommodate the facility's staff with movement of food service carts, beds, and other wheeled traffic.

Use of delayed action closers on many doors throughout industrial and commercial buildings can also assist the flow of traffic. Locations where additional time to clear the opening is advantageous are doors between office and factory/warehouse facilities, doors to workshops or laboratories, to kitchen and food processing areas, etc.

## OPTIONAL FEATURES ARMS

### Non-Hold Open

Self-closes door every time door is opened. Auxiliary stop (by others) required except when using the CloserPlus®, CloserPlus Spring™ or Unitrol® arms.

### Hold Open

Achieved by means of friction or ball and detent/ roller. Friction hold open has a range of 90° to 180° using template location and mechanical adjustment.

Ball and detent or roller hold open is effective in a range of 85° to 110°.

Hold open arm door closers are not permitted to be used on fire door assemblies.

### Door Opening Degrees

| Arm Function | Regular Arm, Top Jamb Parallel Arm | Parallel Rigid Arm | CloserPlus® Parallel Arm | CloserPlus Spring™ Parallel Arm | Unitrol® Parallel Arm | *Unitrol* Top Jamb | Low Profile Regular, Parallel | Slide Track |
|---|---|---|---|---|---|---|---|---|
| Non-Hold Open | ✓ | ✓ | 85° to 110° | 85° to 110° | 85° to 110° | 85° to 110° | ✓ | 85° to 110°/180° |
| Hold Open | 90° to 180° | 85° to 180° | 85° to 110° | 85° to 110° | 85° to 110° | 85° to 110° | N/A | 85° to 110° |

✓=180° trim and template permitting



Copyright © 2002-2016 Yale Security Inc., an ASSA ABLOY Group company. All rights reserved.
Reproduction in whole or in part without the express written permission of Yale Security Inc. is prohibited.

## APPLICATIONS

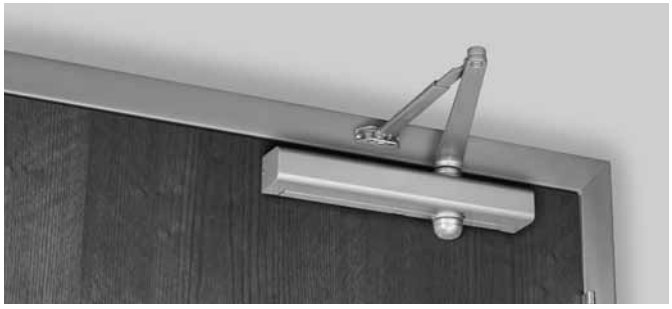

8301 - slim cover

### Regular Arm

This is the only pull-side application where a double lever arm is used. It is the most power-efficient application for a door closer. Sufficient frame, door and/or ceiling clearance must be considered.

8501 - full cover

Since the arm assembly projects directly out from the frame, this application may present an aesthetics issue or be prone to vandalism.

### Top Jamb

For efficiency reasons this application provides the best alternative to the regular arm application. There must be sufficient frame face and/or ceiling clearance for this application. It requires a top rail on the door of just 2-1/4" (57mm). This application provides the best door control for doors in exterior walls that swing out of a building.

The entire door closer and arm assembly project from the frame, similar to the regular arm application, where matters of appearance and malicious abuse can be of concern. Consideration must be given to depth of frame reveal.

### Parallel Arm

This application provides the most appealing design appearance for a surface-mounted door closer having a double lever arm. This also makes it beneficial in vandalism-prone areas. It is on the push side of the door and the arm assembly extends almost parallel to the door. In the closed position, there is very little or no hardware projecting beyond the frame face in most situations.

Due to the geometry of the arm it is approximately 25% less power efficient than a regular arm application. The entire closer and arm assembly are mounted below the frame stop. Top rail clearance dimensions will vary based on the type of cover used. (See pg.15)



Copyright © 2002-2016 Yale Security Inc., an ASSA ABLOY Group company. All rights reserved.
Reproduction in whole or in part without the express written permission of Yale Security Inc. is prohibited.

## APPLICATIONS

Non-hold open arm shown

### Parallel Rigid Arm

An enhanced variation of the standard parallel arm assembly that is intended for use in heavy traffic areas where auxiliary door stops are installed.

Hold open available - specify hand when ordering.

Non-hold open arm shown

### CloserPlus® Arm

Similar to the Parallel Rigid arm, this arm incorporates a stop at the arm's soffit plate to dead stop the door at a predetermined degree of door swing between 85° and 110°, in 5° increments. Prior to dead stop the door closer's backcheck feature slows the door speed to reduce the impact of the stop action.

The *CloserPlus* Arm is intended for use where an auxiliary door stop cannot be utilized and no more than moderate abuse is anticipated. Where more extreme conditions are expected, use of a *Unitrol* arm is recommended.

Available with or without hold open. (Hold open strength is adjustable.)

Non-hold open arm shown

### CloserPlus Spring™ Arm

This arm has all the characteristics of the *CloserPlus* arm with an additional steel buffer spring that provides greater protection at the end of the door opening cycle.

For extreme conditions, use of a *Unitrol* arm is recommended. Available with or without hold open.

### CloserPlus Ramp™

The CLP-R uses a patent pending ramp and plunger design that easily slides into place reducing wear often seen on traditional hold open arms. Ideal for applications where the door will constantly be pulled out of hold open.



Copyright © 2002-2016 Yale Security Inc., an ASSA ABLOY Group company. All rights reserved.
Reproduction in whole or in part without the express written permission of Yale Security Inc. is prohibited.

## APPLICATIONS

### Regular Rigid Arm
This double lever arm features a non-adjustable secondary arm. Orbitally riveted joints prevent tampering or disassembly. Prefix "R" to model number. Available non-hold open only.

### Parallel Rigid Offset Arm
This heavy-duty parallel rigid arm provides additional vertical clearance. It is well suited for applications where weather-stripping or other hardware prevents the use of the standard Parallel Rigid (PR) soffit plate. The non-hold open and hold arms allow 1-1/4" clearance. When used in conjunction with a #6891 spacer block, the PRO arm provides 1-7/8" clearance to accommodate the use of a surface overhead stop/holder.

Parallel

Top Jamb

### Unitrol® Arm
Can be used for either parallel arm or top jamb applications. *Unitrol* arms combine the features of a double lever arm overhead door stop/holder with the backcheck feature of the door closer to reduce door stopping shock loads to a minimum. The *Unitrol* uses a compression spring buffer at the soffit plate/arm shoe that will absorb 30 lbf. of force, 5° prior to the door's dead stop. Coupled with the door closer's backcheck feature, this arm provides the most controlled stop available with a surface door closer. For parallel arm applications there are three different length arm assemblies. Each length is designed for a specific range of door widths, to provide precise door control. This further lessens the dead stop impact on the door's hinges/pivots.


Copyright © 2002-2016 Yale Security Inc., an ASSA ABLOY Group company. All rights reserved.
Reproduction in whole or in part without the express written permission of Yale Security Inc. is prohibited.

## APPLICATIONS

Pull Side

Low Profile Pull Side

Push Side

Low Profile Push Side

**Slide Track**
Whether pull- or push-side mounted, slide track provides the designer with the smoothest lines available in a surface- mounted door closer. The single lever arm allows components to be located in a stack configuration to minimize projection and eliminate obtrusive arm angles. The arm geometry reduces door closer power efficiency by approximately 25% from that of a regular arm.

**Standard unit:**

- Adjustable85°- 110° (hold open and non-hold open). Track is supplied with a spring buffered stop. An auxiliary stop, by others, is recommended.
- Specify if hold open unit is required.
- 180° swing (non-hold open, pull side only) is also available. This track assembly requires that a door stop, by others, be supplied to stop the door.

Regular Arm

Parallel Arm

**Regular Arm:** Allows closer to be installed where there is as little as 1" (25mm) of frame face or ceiling clearance.

**Parallel Arm:** Allows closer to be installed 1/2" (13mm) higher up on door than standard parallel arm application.

**Low Profile Arm**
Supplied with 8381/8581 series door closers for non-hold open installations only. Low profile arms have a reduced height elbow joint and a straight main arm. This enables the door closer to be installed in less vertical space.

**Note:** Low profile arm door closers are not supplied with Tri-Style® packaging.


Copyright © 2002-2016 Yale Security Inc., an ASSA ABLOY Group company. All rights reserved.
Reproduction in whole or in part without the express written permission of Yale Security Inc. is prohibited.

## REGULAR ARM

### Closer Mounting Plates
### Slim Line Installations

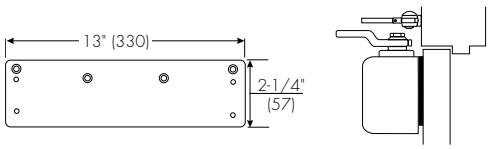


**Narrow Top Rail - #8146 Drop Plate:** For use where the narrow top rail of the door prevents the closer from being mounted directly on to the door surface. This drop plate must be used for any Series 8000 closer mounted on a top rail between 1-9/16" and 2-7/16" (40 and 62mm) in height, or any Series 8080 closer mounted on a top rail between 1-7/16" and 2-5/16" (36 and 59mm) in height.

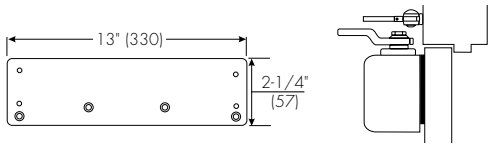


**Concealed Door Holder - #8146 Drop Plate:** For use where a concealed door holder prevents normal mounting of the closer to the door. This is the same plate used for narrow rail mounting, but is inverted for this application to permit the mounting screws to clear the bottom of the door-holder preparation in the top rail of the door. This places the centerline of the plate's upper mounting screws at 2-3/16" (56mm) from the top of the door.

### Full Cover Installations

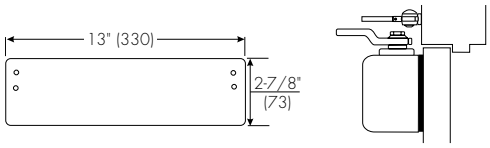


**Exposed Back - #8445 Molded Full Cover Decorative Back Plate:** For use on doors with glass lights where a closer with a molded full cover is installed and the closer back is exposed. This plate covers the back of the installation to give a pleasing appearance from the reverse side.

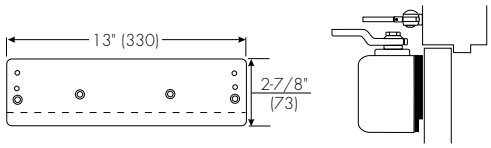


**Exposed Back/Narrow Top Rail - Exposed Back Concealed Door Holder - #8446 Molded Full Cover Drop Plate Kit:** For use with molded full cover installation when an 8146 Plate is needed as a drop plate on a narrow top rail, or as a clearance plate for a concealed door holder, and the closer back is exposed. Kit contains an 8146 Drop Plate and an 8445 Decorative Plate.

### Metal Cover Installations

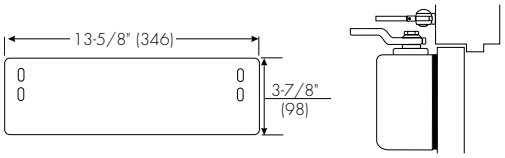


**Exposed Back - #8545 Metal Cover Decorative Back Plate:** For use on doors with glass lights where a closer with a metal full cover is installed and the closer back is exposed. This plate covers the back of the installation to give a pleasing appearance from the reverse side.

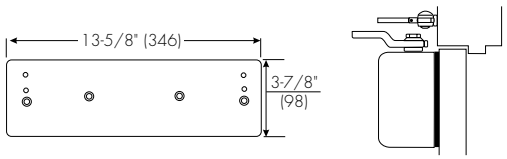


**Concealed Door Holder - #8546 Metal Cover Drop Plate:** For use where a concealed door holder prevents the normal mounting of the closer to the door. This plate permits the mounting screws to clear the bottom of the door-holder preparation in the top rail of the door. This places the centerline of the plate's upper mounting screws at 2-3/16" (56mm) from the top of the door.

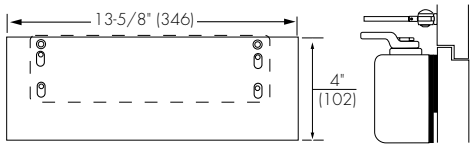


**Exposed Back/Narrow Top Rail - #8549 Metal Cover Drop Plate Kit:** For use with metal full cover installations, when an 8146 Plate is needed as a drop plate on a narrow top rail and the closer back is exposed. Kit contains an 8146 Drop Plate and an 8545 Decorative Plate.



Copyright © 2002-2016 Yale Security Inc., an ASSA ABLOY Group company. All rights reserved.
Reproduction in whole or in part without the express written permission of Yale Security Inc. is prohibited.

## Closer Mounting Plates
## Architectural Plastic or Metal Cover Installations

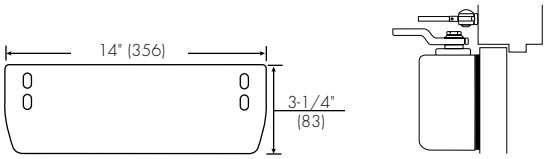


**Exposed Back - #8545A Architectural Plastic or Architectural Metal Cover Decorative Back Plate:** For use on doors with glass lights where a closer with an architectural plastic or metal cover is installed and the closer back is exposed. This plate covers the back of the installation to give a pleasing appearance from the reverse side.

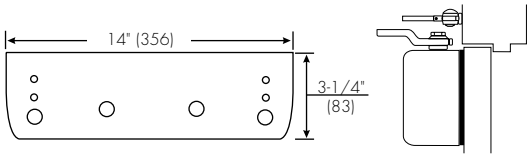


**Concealed Door Holder - #8546A Architectural Plastic or Architectural Metal Cover Drop Plate:** For use where a concealed door holder prevents the normal mounting of the closer to the door. This plate permits the mounting screws to clear the bottom of door-holder preparation in the top rail of the door. This places the centerline of the plate's upper mounting screws at 2-3/16" (56mm) from the top of the door.

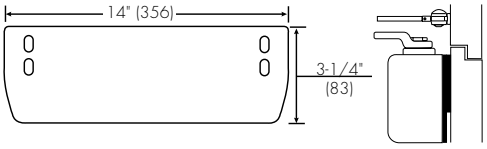


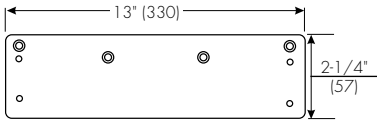


**Exposed Back/Narrow Top Rail - #8549A Architectural Plastic or Architectural Metal Cover Drop Plate Kit:** For use with architectural plastic or metal cover installations when an 8146 plate is needed as a drop plate on a narrow top rail and the closer back is exposed. Kit contains an 8146 Drop Plate and an 8545A Decorative Plate.


Copyright © 2002-2016 Yale Security Inc., an ASSA ABLOY Group company. All rights reserved.
Reproduction in whole or in part without the express written permission of Yale Security Inc. is prohibited.

## REGULAR ARM

### Brackets for Non-Hold Open Arms

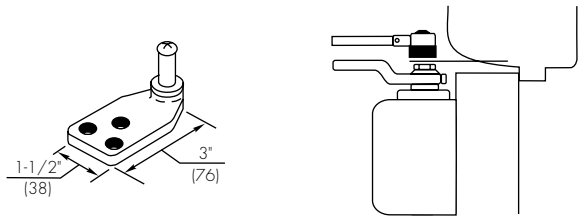


**Molded/Bull Nose Trim - #2403B Bracket:** For use where the door frame has molded or bull nose trim which will not accept a standard non-hold open shoe. The bracket is mortised into the frame rabbet, and projects beyond the face of the frame. It will accommodate a frame rabbet up to 2" (51mm) deep.

**Molded / Bull Nose Trim - #2403-3/4 Bracket:** This bracket is similar to, but longer than, the 2403B bracket. It is designed to accommodate frame rabbets from 2" to 2-7/8" (51 to 73mm) deep.

### Brackets for Hold Open Arms

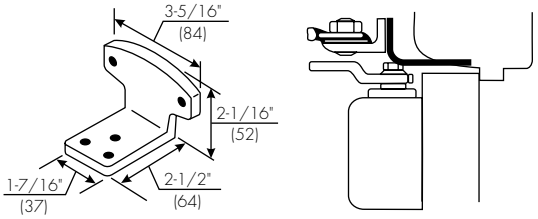


**Molded / Bull Nose Trim - #80 Bracket:** For use where the door frame has molded or bull nose trim which will not accept a standard hold open shoe. It is mortised into the frame rabbet, and projects beyond the face of the frame. It will accommodate a rabbet up to 2" (51mm) deep. This bracket is used in combination with the standard hold-open mounting shoe.

## TOP JAMB ARM

### Closer Mounting Plates
### Slim Line Installations

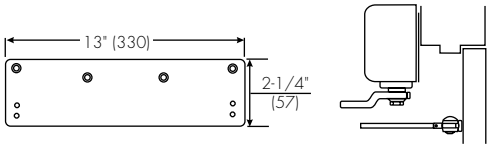


**Low Ceiling Clearance - #8146 Drop Plate:** For use where low ceiling clearance prevents normal top jamb mounting. This plate is used when clearance is from 1-7/8" to 2-7/8" (48 to 73mm). Where ceiling clearance is less than 1-7/8" (48mm) see #8148 Drop Plate on page 30.

**Overhead Door Holder - #8146 Drop Plate:** For use where a surface or concealed overhead door holder prevents normal top jamb mounting. This plate drops the closer and allows arm mounting screws to clear the bottom of the door holder. This places the centerline of the arm mounting screws at 2-7/8" (73mm) from the top of the door.


Copyright © 2002-2016 Yale Security Inc., an ASSA ABLOY Group company. All rights reserved.
Reproduction in whole or in part without the express written permission of Yale Security Inc. is prohibited.

## Closer Mounting Plates
## Slim Line Installations

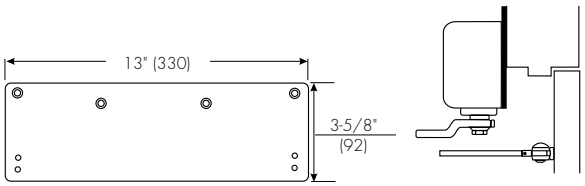


**Low Ceiling Clearance - #8148 Drop Plate:** For use where the ceiling clearance is between 1-1/2" and 1-3/4" (38 and 44mm).

## Metal Cover Installations

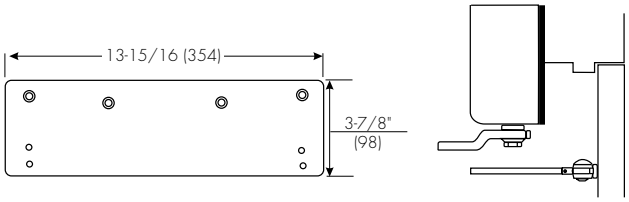


**Low Ceiling Clearance - Overhead Door Holder - #8547 Metal Full Cover Drop Plate:** For use where a low ceiling clearance prevents normal top jamb mounting. This plate is used when the clearance is between 1-5/8" and 3-7/8" (41 and 98mm). Or for use where a surface or concealed overhead door holder prevents normal top jamb mounting of a closer with a metal full cover. This plate drops the closer and allows arm mounting screws to clear the bottom of the door holder. This places the centerline of the arm mounting screws at 3-7/8" (98mm) from the top of the door.

## Architectural Plastic or Metal Cover Installations

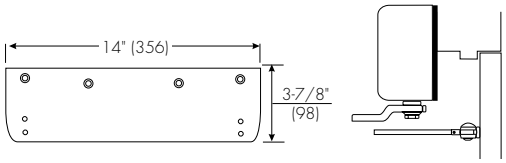


**Low Ceiling Clearance - Overhead Door Holder - #8547A Architectural Plastic or Architectural Metal Cover Drop Plate:** For use where low ceiling clearance prevents normal top jamb mounting. This plate is used when the clearance is between 1-5/8" and 3-7/8" (41 and 98mm). Also for use where a surface or concealed overhead door holder prevents normal top jamb mounting of a closer with an architectural plastic or metal full cover. This plate drops the closer and allows arm mounting screws to clear the bottom of the door holder. This places the centerline of the arm mounting screws at 3-7/8" (98mm) from the top of the door.


Copyright © 2002-2016 Yale Security Inc., an ASSA ABLOY Group company. All rights reserved.
Reproduction in whole or in part without the express written permission of Yale Security Inc. is prohibited.

## Closer Mounting Plates
## Slim Line Installations

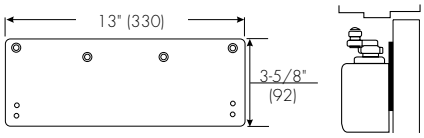


**Narrow Top Rail - #8148 Drop Plate:** For use where a narrow top rail prevents the closer from being mounted directly to the door surface. This drop plate can be used to mount a closer on a top rail as narrow as 2-7/8" (73mm) in height.

## Full Cover Installations

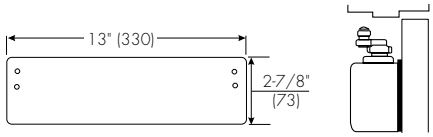


**Exposed Back - #8445 Molded Full Cover Decorative Back Plate:** For use on doors with glass lights where a closer with molded full cover is installed and the closer back is exposed. This plate covers the back of the installation to give a pleasing appearance from the reverse side.

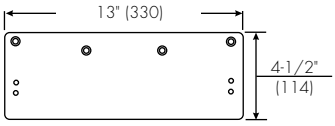


**Exposed Back/Narrow Top Rail - #8158 Molded Full Cover Drop Plate:** For use on doors with glass lights where a closer with molded full cover is installed and the back of the closer is exposed. This covers the back of the installation and gives a pleasing appearance from the reverse side.

## Metal Cover Installations

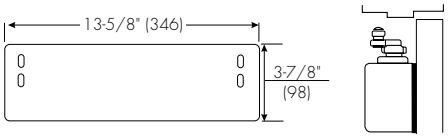


**Exposed Back - #8545 Metal Full Cover Decorative Back Plate:** For use on doors with glass lights where a closer with full metal cover is installed and the back of the closer is exposed. This plate covers the back of the installation and gives a pleasing appearance from the reverse side.

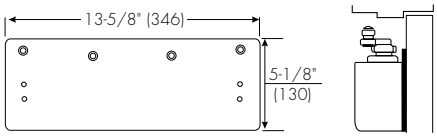


**Exposed Back/Narrow Top Rail - #8548 Metal Full Cover Drop Plate:** For use on doors with glass lights where a closer with metal full cover is installed on a narrow top rail, and the back of the cover is exposed. This drop plate can be used to mount a closer on a top rail as narrow as 2-7/8" (73mm) in height. This plate covers the back of the installation and gives a pleasing appearance from the reverse side.

## Architectural Plastic or Metal Cover Installations

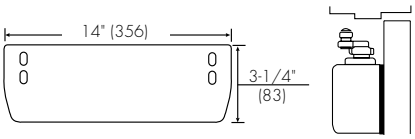


**Exposed Back - #8545A Architectural Plastic or Architectural Metal Cover Decorative Back Plate:** For use on doors with glass lights where a closer with an architectural plastic or metal cover is installed and the closer back is exposed. This plate covers the back of the installation to give a pleasing appearance from the reverse side.

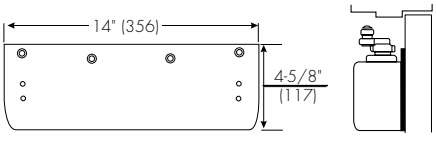


**Exposed Back/Narrow Top Rail - #8548A Architectural Plastic or Architectural Metal Cover Drop Plate:** For use on doors with glass lights where a closer with an architectural plastic or metal cover is installed on a narrow top rail, and the back of the cover is exposed. This drop plate can be used to mount a closer on a top rail as narrow as 2-7/8" (73mm) in height. This plate covers the back of the installation to give a pleasing appearance from the reverse side.



Copyright © 2002-2016 Yale Security Inc., an ASSA ABLOY Group company. All rights reserved.
Reproduction in whole or in part without the express written permission of Yale Security Inc. is prohibited.

## Brackets for Non-Hold Open Arms

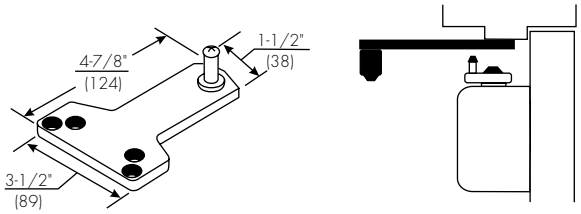


**Standard Installation - #1618A Soffit Plate:** This soffit plate is supplied standard with parallel arm closers. It can be mounted where the frame soffit is as narrow as 1" (25 mm).

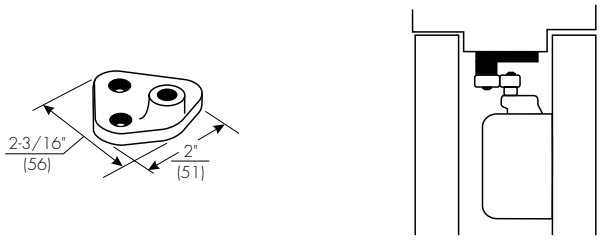


**Mounting between Doors - #2018 Soffit Bracket:** For use where insufficient space between companion doors does not permit use of other soffit plates. This bracket permits mounting of the closer between doors with as little as 3" (76mm) of header space. Permits closer arm to clear up to 5/8" (16mm) high stop.

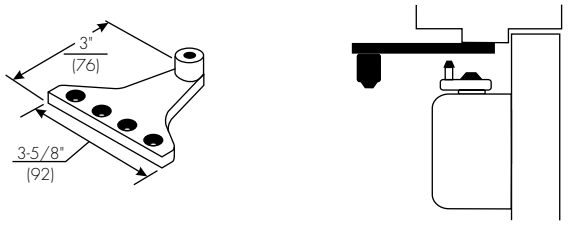


**Narrow Frame/Removable Stop - #2018B Soffit Plate:** For use where a narrow frame or frame with removable stop does not permit use of the standard soffit plate. This soffit plate may be mounted on the frame soffit or the frame rabbet where the stop does not exceed 5/8" (16mm) in height. All of the screw holes are in a straight line, requiring as little as 1-1/4" (32mm) of frame reveal to mount bracket and maintain good closer arm geometry. Where the frame soffit is as wide as 2" (51mm), this soffit plate may be used to clear weather-stripping that is up to 1-3/8" (35mm) wide and 5/8" (16mm) in height.

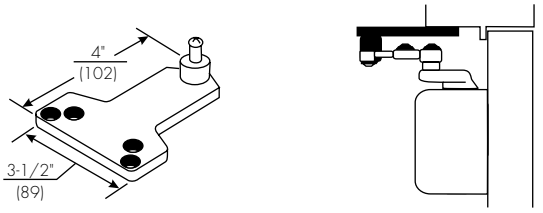


**Blade/Applied Stop - #2018D Soffit Plate:** For use where a blade or applied stop does not permit installation of the standard soffit plate. Mounts to either the frame soffit or rabbet. Since this soffit plate projects 7/8" (22mm) less than a standard soffit plate, it requires a minimum frame reveal of 1-1/2" (38mm). Permits closer to clear up to a 5/8" (16mm) stop.

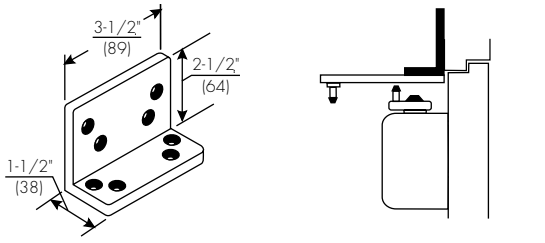


**Flush Transom - #2022 Angle Bracket:** For use where rabbeted or flush transom conditions prevent installation of a soffit plate. Used in combination with the 1618 soffit plate, or may be used in combination with the 2018S soffit plate when it is necessary for the closer arm to clear a separate overhead door holder.

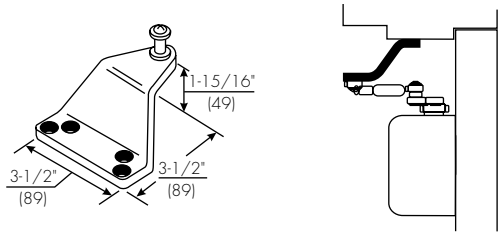


**Extra-Clearance - #2018S Offset Soffit Plate:** For use where the need for additional clearance prevents use of the standard soffit plate. This plate mounts to the frame soffit to provide up to 2" (51mm) of clearance when a separate overhead door holder is used. Standard mounting requires a 2-5/8" (67mm) wide frame soffit. It may also be used where unusually high frame stops or weather-stripping prevent the use of other soffit plates.


Copyright © 2002-2016 Yale Security Inc., an ASSA ABLOY Group company. All rights reserved.
Reproduction in whole or in part without the express written permission of Yale Security Inc. is prohibited.

## Brackets for Non-Hold Open & Hold Open Arms

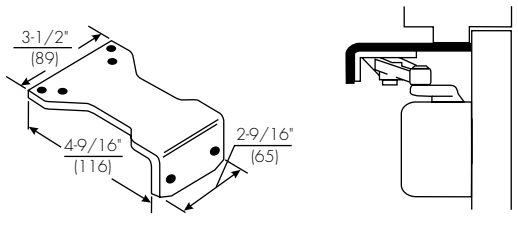


**Parallel Hold-Open - #1628H Adapter Plate:** Supplied standard with all parallel arm hold open closers. It can also be used to convert regular arm or top jamb hold open arms to parallel arm installation. It can be mounted where the frame soffit is as narrow as 1" (25mm).

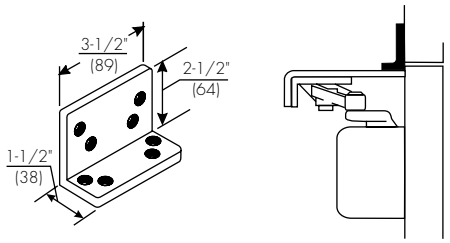


**Flush Transom - #2022 Angle Bracket:** For use where rabbeted or flush transom conditions prevent installation of a soffit plate. Used in combination with the 1628H adapter plate, this bracket fastens to the overhead transom to provide a mounting surface for the soffit plate assembly.

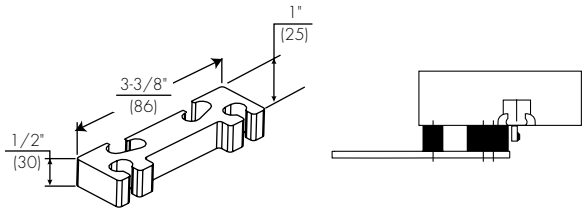


**Clearance/Support Blade Stop - #6891 Spacer Block:** For use where the door frame has a blade stop and the soffit plate must be mounted on the frame rabbet. This accessory is used in combination with the standard spacer block to provide clearance of the blade stop. Also used with non-hold open arms.


Copyright © 2002-2016 Yale Security Inc., an ASSA ABLOY Group company. All rights reserved.
Reproduction in whole or in part without the express written permission of Yale Security Inc. is prohibited.

## Closer Mounting Plates
## Slim Line Installations

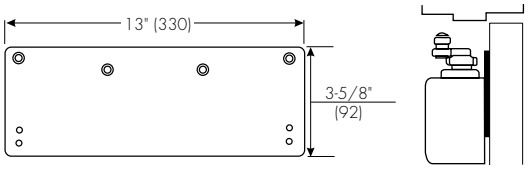


**Narrow Top Rail - #8148 Drop Plate:** For use where a narrow top rail prevents the closer from being mounted directly to the door surface. This drop plate can be used to mount a closer on a top rail as narrow as 2-9/16" (65mm) in height.

## Full Cover Installations

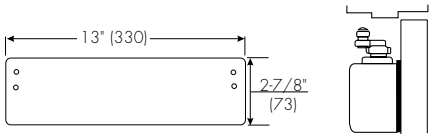


**Exposed Back - #8445 Molded Full Cover Decorative Back Plate:** For use on doors with glass lights where a closer with molded full cover is installed and the closer back is exposed. This plate covers the back of the installation to give a pleasing appearance from the reverse side.

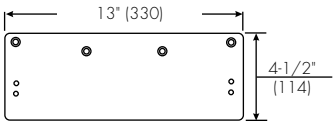


**Exposed Back/Narrow Top Rail - #8158 Molded Full Cover Drop Plate:** For use on doors with glass lights where a closer with molded full cover is installed and the back of the closer is exposed. This covers the back of the installation and gives a pleasing appearance from the reverse side.

## Metal Cover Installations

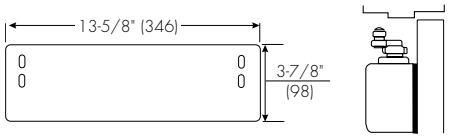


**Exposed Back - #8545 Metal Full Cover Decorative Back Plate:** For use on doors with glass lights where a closer with full metal cover is installed and the back of the closer is exposed. This plate covers the back of the installation and gives a pleasing appearance from the reverse side.

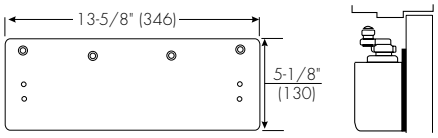


**Exposed Back/Narrow Top Rail - #8548 Metal Full Cover Drop Plate:** For use on doors with glass lights where a closer with metal full cover is installed on a narrow top rail, and the back of the cover is exposed. This drop plate can be used to mount a closer on a top rail as narrow as 2-9/16" (65mm) in height. This plate covers the back of the installation and gives a pleasing appearance from the reverse side.

## Architectural Plastic or Metal Cover Installations

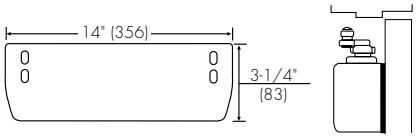


**Exposed Back - #8545A Architectural Plastic or Architectural Metal Cover Decorative Back Plate:** For use on doors with glass lights where a closer with an architectural plastic or metal cover is installed and the closer back is exposed. This plate covers the back of the installation to give a pleasing appearance from the reverse side.

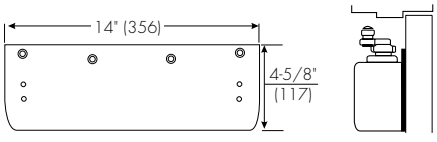


**Exposed Back/Narrow Top Rail - #8548A Architectural Plastic or Architectural Plastic or Architectural Metal Cover Drop Plate:** For use on doors with glass lights where a closer with an architectural plastic or metal cover is installed on a narrow top rail, and the back of the cover is exposed. This drop plate can be used to mount a closer on a top rail as narrow as 2-9/16" (65mm) in height. This plate covers the back of the installation to give a pleasing appearance from the reverse side.


Copyright © 2002-2016 Yale Security Inc., an ASSA ABLOY Group company. All rights reserved.
Reproduction in whole or in part without the express written permission of Yale Security Inc. is prohibited.

## Brackets for Non-Hold Open Arms & Hold Open Arms

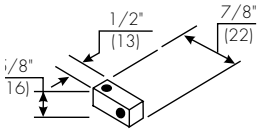


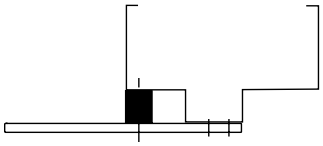

**Standard - #2019S Spacer Block:** For use where a narrow frame soffit does not provide adequate support for the soffit plate. Supplied as standard with all parallel rigid arm closers.

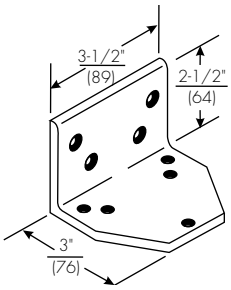


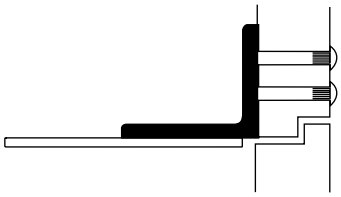

**Flush Rabbeted Transom - #2019L Angle Bracket:** For use where flush transom conditions prevent mounting of the standard soffit plate. This bracket is used in combination with the standard soffit plate.

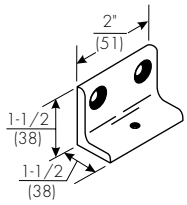


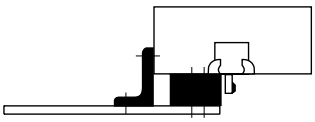

**Narrow Frame - #6890 Support Bracket:** For use where the frame is narrow and the soffit plate cannot be mounted directly to the frame soffit or rabbet. Used in combination with the #6891 Spacer Block on blade stop frames to provide extra support and needed clearance of the blade stop. Used on frames where the frame stop does not exceed 5/8" (16mm) in height.

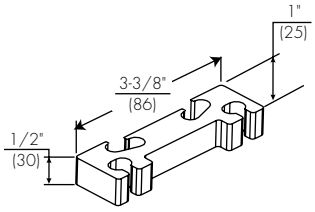


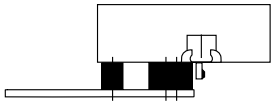

**Clearance/Support Blade Stop - #6891 Spacer Block:** For use where the door frame has a blade stop and the soffit plate must be mounted on the frame rabbet. This accessory is used in combination with the standard spacer block to provide clearance of the blade stop.



Copyright © 2002-2016 Yale Security Inc., an ASSA ABLOY Group company. All rights reserved.
Reproduction in whole or in part without the express written permission of Yale Security Inc. is prohibited.

## Closer Mounting Plates
## Parallel Arm

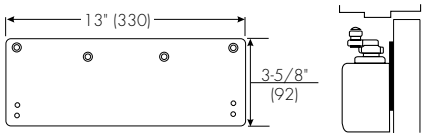


**Narrow Top Rail - #8148 Drop Plate:** For use where a narrow top rail prevents the closer from being mounted directly to the door surface. This drop plate can be used to mount a closer on a top rail as narrow as 2-7/16" (62mm) in height.

## Full Cover Installations

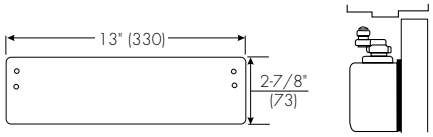


**Exposed Back - #8445 Molded Full Cover Decorative Back Plate:** For use on doors with glass lights where a closer with molded full cover is installed and the closer back is exposed. This plate covers the back of the installation to give a pleasing appearance from the reverse side.

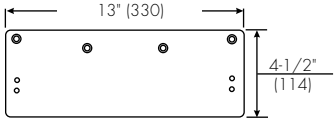


**Exposed Back/Narrow Top Rail - #8158 Molded Full Cover Drop Plate:** For use on doors with glass lights where a closer with molded full cover is installed and the back of the closer is exposed. This covers the back of the installation and gives a pleasing appearance from the reverse side.

## Metal Cover Installations

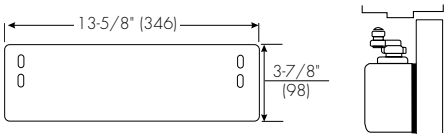


**Exposed Back - #8545 Metal Full Cover Decorative Back Plate:** For use on doors with glass lights where a closer with full metal cover is installed and the back of the closer is exposed. This plate covers the back of the installation and gives a pleasing appearance from the reverse side.

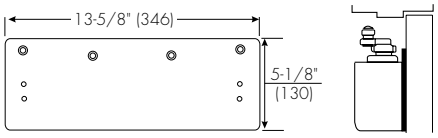


**Exposed Back/Narrow Top Rail - #8548 Metal Full Cover Drop Plate:** For use on doors with glass lights where a closer with metal full cover is installed on a narrow top rail, and the back of the cover is exposed. This drop plate can be used to mount a closer on a top rail as narrow as 2-9/16" (65mm) in height. This plate covers the back of the installation and gives a pleasing appearance from the reverse side.

## Architectural Plastic or Metal Cover Installations

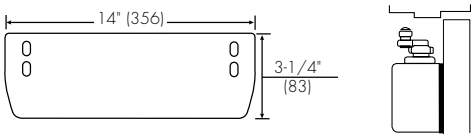


**Exposed Back - #8545A Architectural Plastic or Architectural Metal Cover Decorative Back Plate:** For use on doors with glass lights where a closer with an architectural plastic or metal cover is installed and the closer back is exposed. This plate covers the back of the installation to give a pleasing appearance from the reverse side.

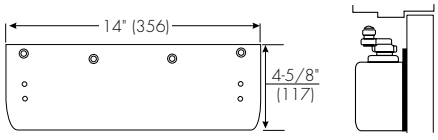


**Exposed Back/Narrow Top Rail - #8548A Architectural Plastic or Architectural Plastic or Architectural Metal Cover Drop Plate:** For use on doors with glass lights where a closer with an architectural plastic or metal cover is installed on a narrow top rail, and the back of the cover is exposed. This drop plate can be used to mount a closer on a top rail as narrow as 2-7/16" (62mm) in height. This plate covers the back of the installation to give a pleasing appearance from the reverse side.


Copyright © 2002-2016 Yale Security Inc., an ASSA ABLOY Group company. All rights reserved.
Reproduction in whole or in part without the express written permission of Yale Security Inc. is prohibited.

## Closer Mounting Plate

### Soffit Plate Reinforcing Brackets (for Parallel Arm)

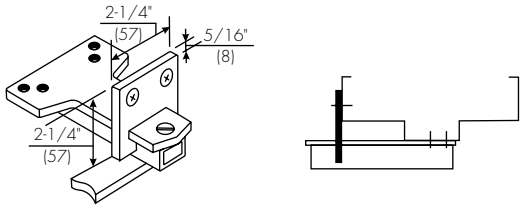


**Additional Support - #6190 Reinforcing Bracket:** Standard for use with all parallel arm *Unitrol* door controls. Provides additional support to the soffit plate on installations with door frame reveals from 1-7/8" to 4-5/8" (48 to 117mm).

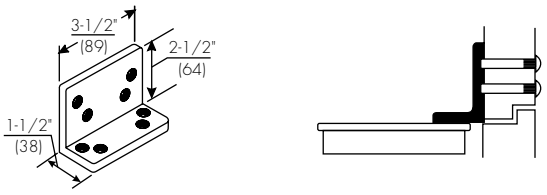


**Flush Rabbeted Transom - #2022 Angle Bracket:** Optional for use with all parallel arm *Unitrol* door controls. For use where rabbeted or flush transom conditions prevent installation of the soffit plate assembly. This bracket fastens to the overhead transom to provide a mounting surface for the soffit plate assembly.

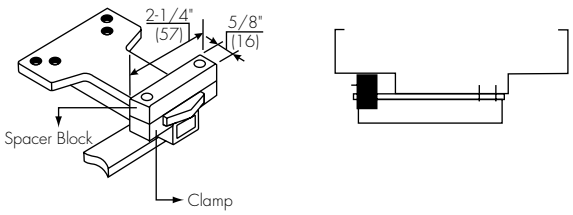


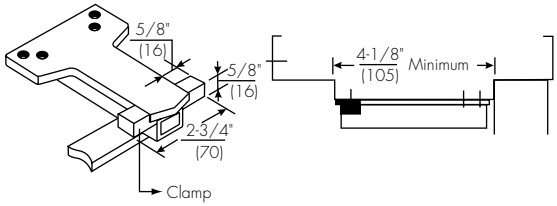


**Wide Frame - #6191 Reinforcing Kit:** Optional for use with all parallel arm *Unitrol* door controls. Used to support the soffit plate on installations with wide frames. Clamps may be used with or without the spacer block, depending on frame conditions.



Copyright © 2002-2016 Yale Security Inc., an ASSA ABLOY Group company. All rights reserved.
Reproduction in whole or in part without the express written permission of Yale Security Inc. is prohibited.

## Closer Mounting Plates
## Top Jamb

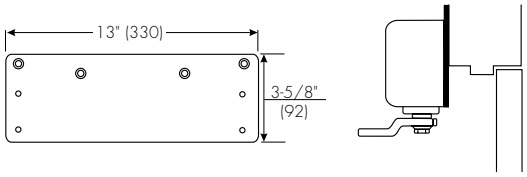


**Narrow Top Rail - #8148 Drop Plate:** For use where a narrow top rail prevents the closer from being mounted directly to the door surface. This drop plate can be used to mount a closer on a top rail as narrow as 2-7/16" (62mm) in height.

## Full Cover Installations

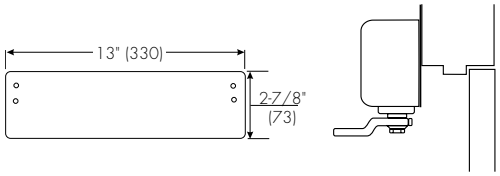


**Exposed Back - #8445 Molded Full Cover Decorative Back Plate:** For use on doors with glass lights where a closer with molded full cover is installed and the closer back is exposed. This plate covers the back of the installation to give a pleasing appearance from the reverse side.

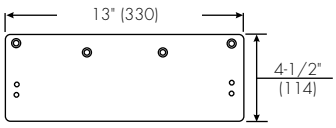


**Exposed Back/Narrow Top Rail - #8158 Molded Full Cover Drop Plate:** For use on doors with glass lights where a closer with molded full cover is installed and the back of the closer is exposed. This covers the back of the installation and gives a pleasing appearance from the reverse side.

## Metal Cover Installations

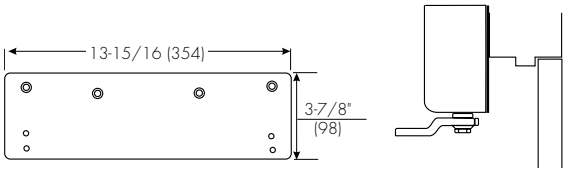


**Low Ceiling Clearance - Overhead Door Holder - #8547 Metal Full Cover Drop Plate:** For use where a low ceiling clearance prevents normal top jamb mounting. This plate is used when the clearance is between 1-5/8" and 3-3/4" (41 and 95mm). Or for use where a surface or concealed overhead door holder prevents normal top jamb mounting of a closer with a metal full cover. This plate drops the closer and allows arm mounting screws to clear the bottom of the door holder. This places the centerline of the arm mounting screws at 3-7/8" (98mm) from the top of the door.

## Architectural Plastic or Metal Cover Installations

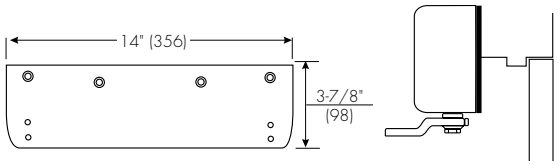


**Low Ceiling Clearance - Overhead Door Holder - #8547A Architectural Plastic or Architectural Metal Cover Drop Plate:** For use where low ceiling clearance prevents normal top jamb mounting. This plate is used when the clearance is between 1-5/8" and 3-3/4" (41 and 95mm). Or for use where a surface or concealed overhead door holder prevents normal top jamb mounting of a closer with an architectural plastic or metal full cover. This plate drops the closer and allows arm mounting screws to clear the bottom of the door holder. This places the centerline of the arm mounting screws at 3-7/8" (98mm) from the top of the door.


Copyright © 2002-2016 Yale Security Inc., an ASSA ABLOY Group company. All rights reserved.
Reproduction in whole or in part without the express written permission of Yale Security Inc. is prohibited.

# features

## door thickness

Patented (patent no. 6,131,970) door adjustable rose support plates allow the 5400LN to easily adjust to doors from 1-3/4" to 2" thick. It can also be used on 1-3/8" thick doors by adding two spacer plates P/N 14-5401-6644. For 2-1/4" thick doors, please specify door thickness on order.

## ANSI/BHMA

Certified ANSI/BHMA A156.2, Series 4000 Grade 1.

## fire listings

UL - cUL Fire Label for all door functions up to 3 hours.

Note: Any retrofit or other field modification to a fire rated opening can potentially impact the fire rating of the opening, and Yale Locks & Hardware makes no representations or warranties concerning what such impact may be in any specific situation. When retrofitting any portion of an existing fire rated opening, or specifying and installing a new fire-rated opening, please consult with a code specialist or local code official (Authority Having Jurisdiction) to ensure compliance with all applicable codes and ratings.

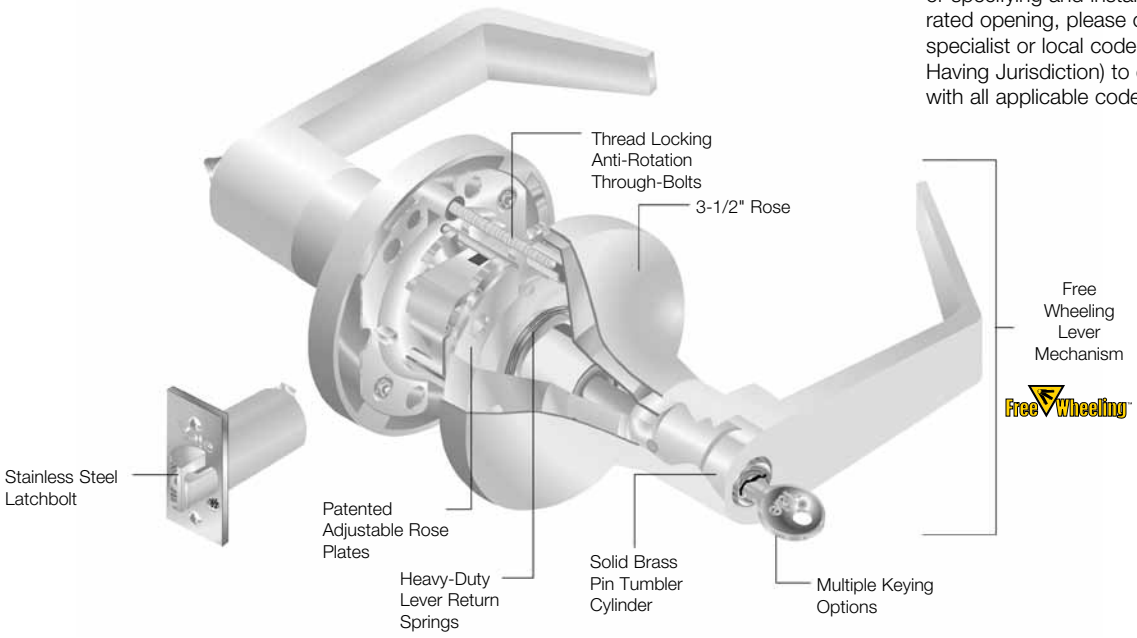


## full-featured grade 1 lever lockset offering

- Free Wheeling lever mechanism increases vandal resistance and reduces the amount of maintenance typically required of locksets with rigid levers.
- 13 finish options.
- 3 lever designs.
- 24 functions including electrified.
- Stainless steel latchbolt provides added strength and wear resistance. Direct 1/2" throw is standard.
- A 3/4" latch throw for fire-rated or pairs of doors is available.
- Wear-resistant plates in the chassis help extend the life of the lockbody and provide smoother lock operation.
- Longer thread locking through-bolts through the chassis provide greater stability and prevent rotation.
- Lifetime warranted heavy-duty lever return springs prevent lever sag and provide positive return of lever to horizontal position.
- Patented (patent no. 6,131,970) door adjustable rose support plates allow for easy adjustment of lockset to fit doors ranging in thickness from 1-3/4" to 2". Rose spacers available for 1-3/8" thick doors.
- Three non-handed lever options (Augusta, Monroe, and Pacific Beach) comply with ADA requirements for easy gripping and operation.
- Expanded cylinder and keying options:
  - Yale® 6- and 7-pin standard and interchangeable core cylinders including Yale® KeyMark® protected keyway cylinders (see page 11).
  - Standard cylinders with Schlage® C and Sargent® LA keyways. Small format interchangeable cores with Best® keyways.
  - Levers which accept interchangeable core cylinders by Best®, Schlage®, ASSA® and Medeco®.
- 3-1/2" roses cover ANSI/BHMA hollow metal door cutout.

# lever designs

## Augusta AU

**Lever:** Cast Zinc
**Rose:** Cold Forged Brass, Bronze

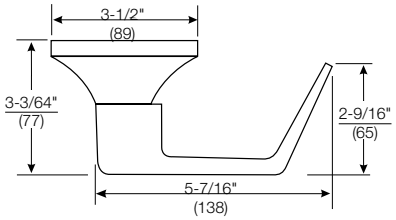


## Monroe MO

**Lever:** Cast Zinc
**Rose:** Cold Forged Brass, Bronze

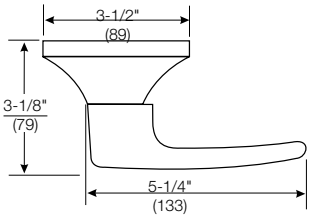


## Pacific Beach PB

**Lever:** Cast Zinc
**Rose:** Cold Forged Brass, Bronze

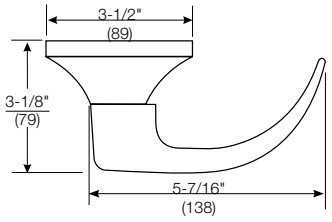


**Dimensions are shown in inches (millimeters).**

**See page 10 and 11 for interchangeable core cylinder order options.**

## functions

### 5401LN (F75)

**Passage or Closet Latch**

- For doors that do not require locking.
- Either lever operates latchbolt at all times.

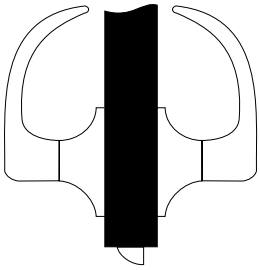

Outside Inside

### 5402LN (F76A)

**Privacy, Bedroom or Bath Lock**

- For lavatory or other privacy doors.
- Either lever operates latchbolt unless outside lever is locked by pushbutton inside.*
- Button automatically releases when inside lever is turned or door is closed.
- Emergency release in outside lever. Emergency key supplied. (PN 14-5302-1053-048)
- Inside lever always active.

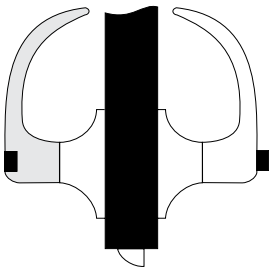

Outside Inside

### 5403LN (F77A)

**Patio or Privacy Lock**

- For exit doors with limited entry.
- Deadlocking latchbolt.
- Either lever operates latchbolt unless outside lever is locked by pushbutton inside.*
- Button automatically releases when inside lever is turned or door is closed.
- Inside lever always active.

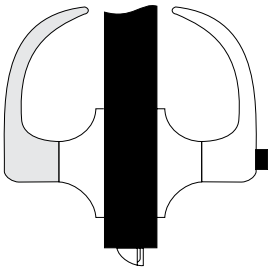

Outside Inside

### 5404LN (F82A)

**Entry Lock**

- For entrance or office doors.
- Deadlocking latchbolt.
- Either lever operates latchbolt (except when outside lever is locked from inside).*
- Pushing button in inside lever locks outside lever. (Automatically releases when inside lever is turned or key is rotated in locked outside lever.)
- Latchbolt is operated by key in outside lever or by rotating inside lever.
- Inside lever always active.

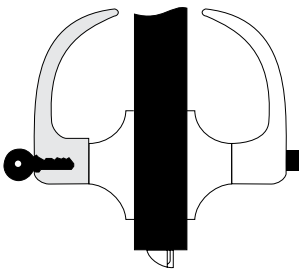

Outside Inside

### 5405LN (F86)

**Storeroom or Closet Lock**

- For use on storeroom, utility, and exit doors.
- Deadlocking latchbolt.
- Latchbolt operated by lever inside, key in outside lever.
- Outside lever always locked.*
- Inside lever always active.

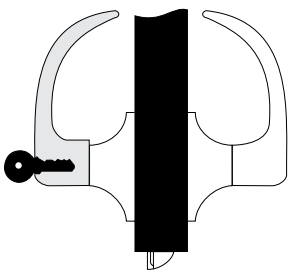

Outside Inside

### 5406LN (F92)

**Service Station Lock**

- Deadlocking latchbolt.
- Either lever operates latchbolt.
- Pushbutton in inside lever locks outside lever. (Automatically releases when inside lever is turned, door is closed or key is rotated in outside lever, except when slotted pushbutton is rotated 90° clockwise to retain outside lever in locked position.)*
- Latchbolt operated by key in outside lever, inside lever always active.

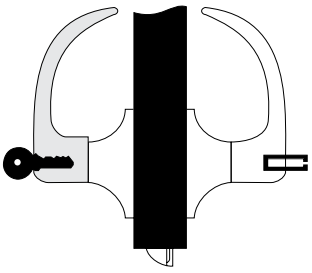

Outside Inside

*** Lever handles are Free-Wheeling in locked position. Shaded area denotes FreeWheeling lever.**

## functions

### 5407LN (F109)

**Entry Lock**

- For entrance, general home or office doors.
- Deadlocking latchbolt.
- Either lever operates latchbolt (except when outside lever is locked from inside).*
- Pushing turn button in inside lever locks outside lever, and automatically releases when inside lever is turned or key is rotated in locked outside lever.
- Outside lever may be retained in locked position by pushing and rotating turn button 90° clockwise to a horizontal position; not released until turn button is manually returned to the vertical position.
- Latchbolt is operated by key in outside lever or by rotating inside lever.
- Inside lever always active.

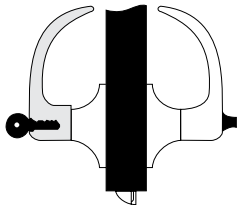

Outside Inside

### 5408LN (F84)

**Classroom Lock**

- For classroom or utility room doors.
- Deadlocking latchbolt.
- Either lever operates latchbolt (except when outside lever is locked by key).*
- Inside lever always active.
- Outside lever locked* or unlocked only by key.

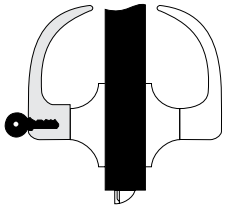

Outside Inside

### 5409LN (F89)

**Exit Latch**

- For exit doors with no-entry desired.
- Deadlocking latchbolt.
- Outside lever always locked.*
- Inside lever always active.

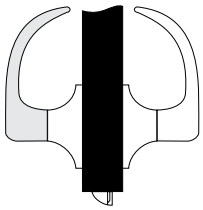

Outside Inside

### 5417LN (F88)

**Apartment, Exit or Public Toilet Lock**

- For office or apartment building entrance doors or lavatory doors.
- Deadlocking latchbolt.
- Either lever operates latchbolt (except when outside lever is locked by key from inside).*
- Key in outside lever operates latchbolt.
- Inside lever always active.

**NOTE: Inside handle requires 1802S standard 6-pin cylinder.**

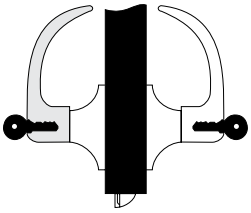

Outside Inside

### 5418LN (F110)

**Intruder Classroom Lock**

- For classroom doors.
- Deadlocking latchbolt.
- Either lever operates latchbolt (except when outside lever is locked by key from either side).
- Outside lever remains locked upon egress
- Inside lever always active.

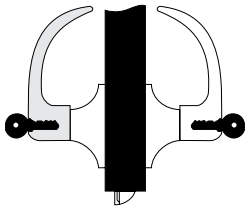

Outside Inside

### 5421LN (F80)

**Communicating Lock**

- For communicating or store entrance doors.
- Deadlocking latchbolt.
- Either lever operates latchbolt (except when key in either lever locks or unlocks the lever independently of the other).*
- Should be used only in offices or rooms with multiple entries.

**NOTE: Not available with IC core cylinders.**

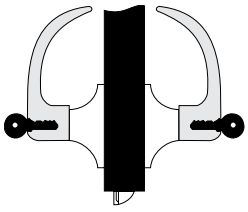

Outside Inside

*** Lever handles are Free-Wheeling in locked position. Shaded area denotes FreeWheeling lever.**

## functions

### 5422LN (F90)

**Corridor Lock**
- Deadlocking latchbolt.
- Either lever operates latchbolt (except when outside lever is locked by inside pushbutton or key in outside lever).* Inside lever always active.
- When locked by button, the button automatically releases when inside lever is turned or door is closed.
- When locked by key, the automatic release is made inoperative and must be manually unlocked by the key.*

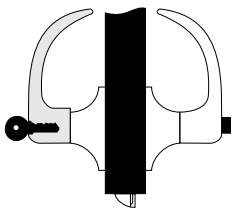

Outside Inside

### 5425LN

**Privacy Lock**
- For lavatory or other privacy doors.
- Either lever operates latchbolt (except when outside lever is locked by inside pushbutton).*
- Button automatically releases by turning inside lever or closing door.
- Door can be unlocked, when necessary, by operating outside turnbutton.
- No emergency key required.
- Optional flush turnbutton available for outside. Specify option "FTB"

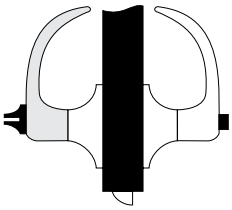

Outside Inside

### 5428LN (F111)

**Communicating Passage Lock**
- For twin communicating or exit doors where one side operation is required.
- Use where space is limited.
- Deadlocking latchbolt.
- One lever operation.
- Blank rose.
- Should be used only where rooms have more than one entrance.

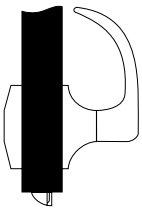

Outside Inside

### 5429LN (F113)

**Communicating Classroom Lock**
- For twin communicating or closet doors where one side operation or space between doors is limited.
- Deadlocking latchbolt.
- Blank rose.
- Inside lever operates latchbolt except when lever is locked by key.*
- Should be used only where rooms have more than one entrance.

**(Not available with IC core cylinders.)**

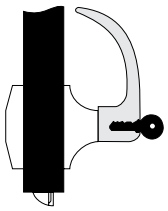

Outside Inside

### 5430LN (F87)

**Utility, Asylum or Institutional Lock**
- Deadlocking latchbolt.
- Latchbolt operated by key in lever from either side.
- Both levers always locked.*

**Note: Not available with IC core cylinders.**

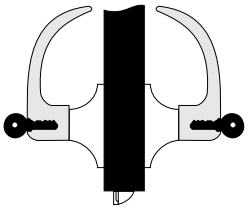

Outside Inside

### 5439LN (F112)

**Communicating Storeroom Lock**
- For twin communicating or closet doors where one side operation is required or space between doors is limited.
- Deadlocking latchbolt.
- Latchbolt operated by key only in inside lever.
- Inside lever always locked.*
- Blank rose.
- Should be used only where rooms have more than one entrance.

**(Note: Not available with I.C. core cylinders)**

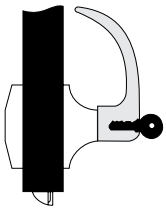

Outside Inside

### 455LN

**Dummy Trim**
- For non-operational lever used for decorative trim.

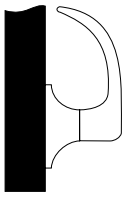

Outside Inside

### 455LN-D

**Double Dummy Trim**
- For non-operational lever used for decorative trim.

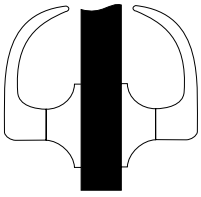

Outside Inside

*** Lever handles are Free-Wheeling in locked position. Shaded area denotes FreeWheeling lever.**

# securex®

## operation

Electric locks provide the ability to electrically lock or unlock the outside trim from a remote location. Fail Safe locks are commonly used in stair towers to release upon fire alarm activation. Fail Secure locks are used on perimeter doors or security doors to allow ingress using access control technologies (proximity cards, keypads, etc.)

## features

- Free Wheeling lever mechanism.
- Self-contained, continuous-duty integral solenoid (allows installation in standard cylindrical prep).
- Available Fail Safe or Fail Secure.
- Available in 12 or 24 volts DC.
- External rectifier available upon request for AC operation.
- Mechanical cylinder override.
- All 5400LN cylinder options.
- Certified ANSI/BHMA Grade 1.
- UL listed.
- 2-year limited warranty.

## REX

Request to Exit - Operating inside lever handle triggers REX switch which can be used to shunt an alarm, monitor egress or release a magnetic lock, etc.

## electrical specifications

- Continuous duty solenoid
  150 mA @ 24VDC
  300 mA @ 12VDC
- REX (SPDT) Contact Rating:
  3A @ 125 VAC
  2A @ 24 VDC

## electrolynx®

Yale® electrified 5400LN locks are equipped with *ElectroLynx* connectors. As a standard feature, these connectors link power from the incoming source to electrified locking products, including hinges, locks, exit devices, magnetic holders and strikes.

**Note: Electrified door hardware with *ElectroLynx* connectors requires a compatible number of lead wires attached to the door hinge.**

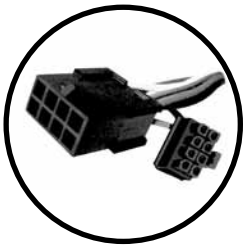

## functions

| Outside Inside | Function | Function Description |
|---|---|---|
| 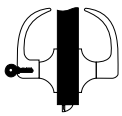 | 5490LN | **Fail Safe**<br>• Power on locks outside lever.<br>• Inside lever always active.<br>• Latchbolt retracted by key when locked electrically.<br>• Free Wheeling lever when locked electrically. |
| 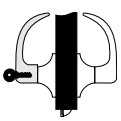 | 5491LN | **Fail Secure**<br>• Power on unlocks outside lever.<br>• Inside lever always active.<br>• Latchbolt retracted by key when power is off.<br>• Free Wheeling lever when power is off (locked). |

| Outside Inside | Function | Function Description |
|---|---|---|
| 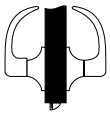 | 5480LN | **Fail Safe**<br>• Power on locks outside lever.<br>• Inside lever always active.<br>• Latchbolt retracted either side except when outside lever is locked electrically.<br>• Free Wheeling lever when locked electrically. |
| 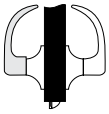 | 5481LN | **Fail Secure**<br>• Power on unlocks outside lever.<br>• Inside lever always active.<br>• Latchbolt retracted either side when power is off.<br>• Free Wheeling lever when power is off (locked). |

# securex® accessories

## BPS power supplies by securitron®

**Operation**
Power supplies are designed to provide reliable filtered and regulated power for long life to a variety of electrified hardware components.

**Product Features**
- Individual output circuit breakers
- Regulated and filtered fuse protected outputs
- LEDs monitor zone status (voltage or no voltage)
- Slide switches connect or disconnect load from power (Not available on 1 Amp supplies)
- Internal Back-Up battery charging circuit
- Rugged steel enclosure
- Fire alarm interface

**Listings**
- UL CLASS 2

**Applications (use with):**
- Fail Safe cylindrical locks
- Fail Secure cylindrical locks

**Ordering**
Ex: BPS-24-4, BPS-12-3

| Model | Input | Output | Application |
|---|---|---|---|
| BPS-24-1 | 120 VAC | 1 Amp @ 24 VDC | 2-5400LN |
| BPS-24-2 | 120 VAC | 2 Amp @ 24 VDC | 5-5400LN |
| BPS-24-4 | 120 VAC | 4 Amp @ 24 VDC | 11-5400LN |
| BPS-12-1 | 120 VAC | 1 Amp @ 12 VDC | 1-5400LN |
| BPS-12-3 | 120 VAC | 3 Amp @ 12 VDC | 3-5400LN |

**Consult factory for additional power supply applications.**

**Yale recommends McKinney®, Pemko and Securitron® for power transfer devices and other electronic accessories.**

## Securitron PowerJump™ ICPT

The Securitron PowerJump ICPT Inductive Coupling Power Transfer delivers power contactlessly and invisibly between the frame and door to power electrified hardware on the door. The PowerJump can be installed at the latch side or hinge side of the door and transfers up to 6 watts of power without pins or wires across the door gap, eliminating points of vulnerability and wear … and no need to core drill the door. The PowerJump is field selectable for 12VDC or 24VDC systems and is ideal for fail secure applications. The unit can hold electrified latches open in continuous duty or can momentarily energize the lockset for latch retraction.

Additional information regarding this product can be found at www.securitron.com.

# cylinders

## cylinder options

The following selection guide indicates the correct cylinder for each locking segment.

| Lockset Series: 5400LN | | Types of Cylinder Mechanisms | | | | | | | |
|---|---|---|---|---|---|---|---|---|---|
| | | Conventional | | Protected Keyway | | Security | | High Security | |
| Cylinder Types | **Fixed Core** | **6-pin** | **7-pin** | **6-pin** | **7-pin** | **6-pin** | **7-pin** | **6-pin** | **7-pin** |
| | Key-In-Lever | 1802 | 1802A | K402 | K402 | 5802 | 5802A | N/A | N/A |
| | **Interchangeable Core** | | | | | | | | |
| | LFIC | 1210 | 1220 | K800 | K800 | 5210 | 5220 | N/A | N/A |
| | SFIC | N/A | N/A | K600 | K600 | N/A | N/A | N/A | N/A |

Refer to Yale® KeyMark® and/or Cylinders and Keys Catalog sections for all details and how to order examples.

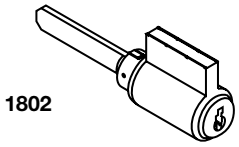

**1802**

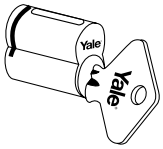


**1210**

## Yale® KeyMark®

For those applications requiring protected key control, Yale® KeyMark® cylinders guard against unauthorized key duplication. The *Yale KeyMark* Security Leg® keyway feature increases resistance against picking and impressioning and can easily retrofit into existing systems. For further details and availability, refer to the separate *Yale KeyMark* catalog.

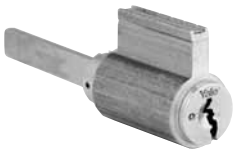

## security cylinders

Security cylinders contain two independent locking mechanisms. The first is a traditional 6- or 7-pin tumbler mechanism with spool drivers for greatly increased picking resistance.

The second is an innovative 5-tumbler rotating disc mechanism with sidebar engagement. The rotating discs are spring loaded and block the bottom of the keyway.

**Illustration**

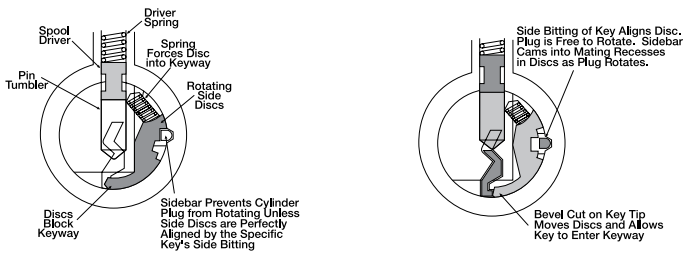

# cylinders

## 107S Schlage® cylinder adapter kit

Used to modify *Schlage* cylinder for fit in the 5400LN.
P/N 14-5407-0300-048

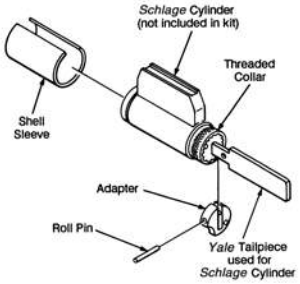


## other manufacturer keyway cylinders

| Illustration | Description | Model Number | Number of Pins |
|---|---|---|---|
| | Best® Keyway Cylinder. Available keyed random, master keyed or uncombinated. Specify keyway A, B, C, D, E, F, G, H, J, K, L or M. | A600 | 6 or 7 |
| 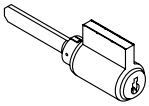 | Corbin Russwin “L4”, Corbin “60”, Russwin “D1”, Sargent® “LA” or Schlage® “E” Keyway. Specify keyway. Available keyed random. | 3804* | 6 |
| 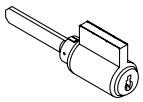 | Schlage® “C” Keyway. Available 0-bitted or keyed random. | 2802 | 6 |

***3804 cylinders require the 107S cylinder adapter kit to fit the 5400LN locksets. These cylinders are not ANSI/BHMA certified.**

## levers accepting SFIC and other manufacturers' large format interchangeable cores

| Description | Prefix | Number of Pins |
|---|---|---|
| SFIC (Accepts all Small Format Interchangeable Cores) | B<br>(i.e. B-AU, B-MO, B-PB) | 6 or 7 |
| Medeco®, ASSA® (LFIC) | M*<br>(i.e. M-AU) | 6 |
| Schlage® (LFIC) | SI<br>(i.e. SI-AU, SI-PB, SI-MO) | 6 |

***Medeco®, ASSA® option available only with AU lever. *(Note: For Medeco 32 series cores.)***
**LFIC = Large Format Interchangeable Core**
**SFIC = Small Format Interchangeable Core**

# latchbolts

## plain latchbolts

Model No. 693 supplied standard with all 5400LN series locksets without locking function. Standard plain latchbolt has a 2-1/4" (57mm) x 1-1/8" (29mm) beveled front with a 2-3/4" (70mm) backset and a 1/2" (13mm) bolt throw. Optional latchbolts with a greater backset/throw available to special order.

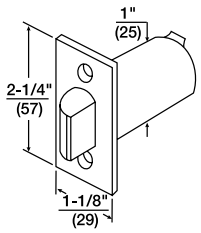


| Model No. | Front | Backset | Throw | Front Width | Latch Diameter |
|---|---|---|---|---|---|
| 693 | Beveled | 2-3/4" (70mm) | 1/2" (13mm) | 1-1/8" (29mm) | 1" (25mm) |
| F693 | Flat | 2-3/4" (70mm) | 1/2" (13mm) | 1-1/8" (29mm) | 1" (25mm) |
| 3693 | Beveled | 3-3/4" (95mm) | 1/2" (13mm) | 1-1/8" (29mm) | 1" (25mm) |

**Note: for 3/4" throw applications, only deadlocking latchbolts available.**

## deadlocking latchbolts

Deadlocking latchbolt Model No. 694 supplied standard with all 5400LN series locksets with locking function. Standard deadlocking latchbolt has a 2-1/4" (57mm) x 1-1/8" (29mm) beveled front with a 2-3/4" (70mm) backset and a 1/2" (13mm) bolt throw. Optional latchbolts with a greater backset/throw available to special order.

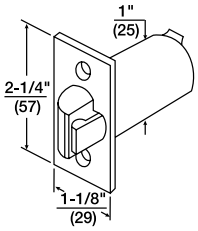


| Model No. | Front | Backset | Throw | Front Width | Latch Diameter |
|---|---|---|---|---|---|
| 694 | Beveled | 2-3/4" (70mm) | 1/2" (13mm) | 1-1/8" (29mm) | 1" (25mm) |
| F694 | Flat | 2-3/4" (70mm) | 1/2" (13mm) | 1-1/8" (29mm) | 1" (25mm) |
| 3694 | Beveled | 3-3/4" (95mm) | 1/2" (13mm) | 1-1/8" (29mm) | 1" (25mm) |
| 480B | Beveled | 2-3/4" (70mm) | 3/4" (19mm) | 1-1/8" (29mm) | 1" (25mm) |
| F480B | Flat | 2-3/4" (70mm) | 3/4" (19mm) | 1-1/8" (29mm) | 1" (25mm) |
| 3480B | Beveled | 3-3/4" (95mm) | 3/4" (19mm) | 1-1/8" (29mm) | 1" (25mm) |

**Note: For 2-3/8" backset, contact Customer Support.**

## backset extension links

All 5400LN Series locksets are supplied with standard latchbolts of 2-3/4" (70mm) backset; optional latchbolts with a 3-3/4" (95mm) backset are available to special order. Extension links are also available for attachment to 2-3/4" (70mm) or 3-3/4" (95mm) backset latchbolts to extend the backset to the desired length.

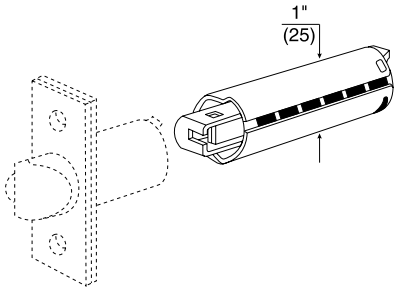


| Desired Backset | Latchbolt Backset | Order Extension List No. |
|---|---|---|
| 5" (127mm) | 2-3/4" (70mm) | 481DL |
| 6" (152mm) | 3-3/4" (95mm) | 481 |
| 7" (178mm) | 2-3/4" (70mm) | 482 |
| 8" (203mm) | 3-3/4" (95mm) | 482 |
| 18" (46cm) | 2-3/4" (70mm) | 484 |
| 19" (48cm) | 3-3/4" (95mm) | 484 |

**Other extension links up to 42" (1.06m) backset are available to special order.**

## attaching screws

(Not regularly supplied when latchbolts ordered separately).

- **For all latchbolts**
  #8-8-32 x 3/4" (19mm) Phillips flat head combination wood and machine screws
  Brass - P/N 81-2022-0416*
  Bronze - P/N 81-2032-0416*

- **Hollow Metal Doors**
  #8 - 32 x 1" (25mm) Phillips flat head machine screw
  Brass - P/N 81-0022-0420*
  Bronze - P/N 81-0032-0420*

***Specify finish required.**

## strikes

Yale® 5400LN locks are available with a variety of strike options. All strikes are located on the same vertical and horizontal center lines as the latchbolt. Some strikes are available in special lip lengths to accommodate varying thickness of doors and frames. To determine the proper length of the lip, measure from the center line of the strike to the edge of the jamb, accounting for any interfering trim (i.e. wood molding) and then add 1/4" (6mm) for curved lip. All strikes are reversible. Strikes are fabricated of either brass, bronze or stainless steel, depending on the lockset trim finish. When ordering strikes separately, specify the finish required.

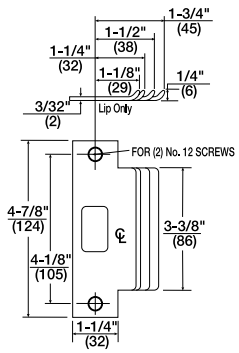


**Model No. 497 ANSI Strike (Standard)**
1-1/4" supplied standard. 1-1/8", 1-1/2", and 1-3/4" lip lengths available by special order. For door and frames with ANSI/ BHMA A156.115 preparations.

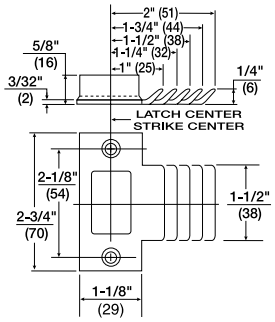


**Model No. 371 T-Strike (Optional)**
1-1/4" curved lip supplied standard. 1", 1-1/2", 1-3/4", and 2" curved lip lengths available by special order. Wrought strike box supplied.

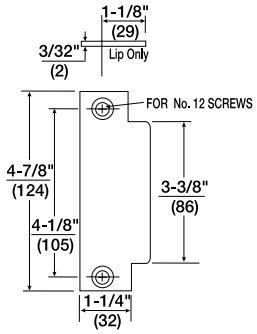


**Model No. 497B Blank ANSI Strike (Optional)**
Available to special order. Installed in frame with standard ANSI/BHMA A156.115 preparation to replace the strike when the lockset has been removed from the door.

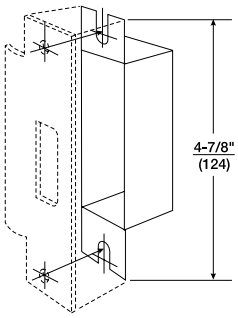


**Model No. 202 Strike Box for ANSI Strike (Optional)**
Specify 497 x 202

## attaching screws

(Not regularly supplied when strikes ordered separately).

**For Model No. 371 strike**
#8-8-32 x 3/4" (19mm) Phillips flat head combination wood and machine screw P/N-81-2012-0416.

**For Model No. 497 strike and 497B plate**
#12-12-24 x 1" (25mm) Phillips flat head combination wood and machine screw P/N-81-2012-0620.

**Note: When ordering strike plates or attaching screws individually, specify the finish required; i.e. 497 x 202 x 612; #81-2012-0620 x 612.**

## sample specification

All locksets shall be 5400LN Series Grade 1 cylindrical lever locksets as assembled by Yale Locks & Hardware.

Lockset chassis shall be constructed of heavy-gauge cold-rolled steel, trivalent chrome plated to protect against rust and corrosion. Locksets shall be adjustable to fit doors between 1-3/4" (44mm) to 2" (51mm) thick.

Locksets shall be non-handed, and shall install easily without the need for specialized installation tools. Locksets shall have separate anti-rotation throughbolts in the 6 o'clock and 12 o'clock position outside the 2-1/8" face bore, and shall have no exposed mounting screws.

Locksets shall have solid one-piece, cast levers without plastic inserts, and shall be a minimum of 5-1/4" in length. Levers shall operate independently, and shall have inside and outside lever return springs. Outside levers on the keyed locksets shall be removable only when the designated key is in the cylinder.

Locksets shall have the capability of accepting 7-pin standard, interchangeable core and high-security cylinders to provide expansion capacity for large master keyed systems.

Vandal resistant levers shall be offered as a standard feature in all locking functions, and shall be Free Wheeling in the locked condition. Locksets that are rigid in the locked condition or which must require resetting (breakaway) are not acceptable.

The latchbolt shall be made of stainless steel.

All locksets shall carry a comprehensive seven-year mechanical warranty. Locksets shall carry a lifetime warranty against lever sag or lever spring breakage.

All locksets shall comply with the following certifications:

- UL 3 Hour Fire Rating
- ANSI/BHMA A156.2 Series 4000, Grade 1
- ANSI A117.1 Accessibility Code
- ANSI/BHMA A156.115 or A156.115-W Preparation

# NB-8700 Top Latch
# Surface Vertical Rod Exit Device
**80 Series**

SARGENT®
ASSA ABLOY

**HW-049**
Revision Date:

## Features

- Single point top latching
- Top latchbolt projection adjustable through center case
- Devices are ANSI A156.3 – 2008 Grade 1
- UL Fire and Panic listed
- Tripping potential removed - no bottom strike
- Rods are 1/2" (13mm) brass, bronze or stainless steel

## Specifications for NB-8700 Series Exit

| | |
|---|---|
| Door Types | Wood or metal 1-3/4" (44mm) minimum thickness.<br>For doors over 1-3/4" to 2-1/4" thick, specify thickness and order as 31- Option<br>4-1/2" (114mm) minimum stile with trim and<br>3-1/2" (44mm) minimum stile without trim. |
| Rail sizes as determined by door width | Rails are available in 4 sizes, use door width to determine size needed.<br>Rails will be factory cut to size, if door width is supplied<br>• E Rail for 24" to 32' door widths, No cutting required for 32" door<br>• F Rail for 33" to 36" door widths, No cutting required for 36" door<br>• J Rail for 37" to 42" door widths, No cutting required for 42" door<br>• G Rail for 43" to 48" door widths, No cutting required for 48' door |
| Strike | 646 Top Strike (Panic and Fire Rated) |
| Dogging Feature | Hex key dogging standard on non fired rated devices; specify 16- for cylinder dogging (#41 cylinder supplied) |
| Electric Options | AL- Alarm<br>BT- Beacon™<br>PL- SARGuide Photoluminescent Coated<br>TL- SARGuide Illuminated Touchpad<br>53- LX Latchbolt Monitor<br>54- Outside Lever Monitoring<br>55- Request-to-Exit Signal - Rail Monitoring<br>56- ELR Remote Latch Retraction<br>57- Delay Egress & Electromagnets<br>58- Electric Dogging |
| Mounting Fasteners | Supplied standard with wood and machine screws<br>Available with through-bolts and mortise (sex) nuts |
| Top Bolt | Stainless steel |
| Device Centerline from Finished Floor | 41" (1041mm) for Standard Applications |
| Door/Opening Height | **Must be specified** - 120" (3048mm) Max Door Opening |
| Center Case Dimensions | 8-3/8" (213mm) x 2-5/8" (67mm) |
| Projection | Pushbar Neutral – 3" (76 mm)<br>Pushbar Depressed – 2-1/8" (54 mm) |
| Fire Exit Hardware | See Chart – Page 3 |

## NB-300 Series Aux Control

- Available as an 06 or 13 function
- Supplied with SARGENT #41 Mortise Cylinder
- NB-300 is mounted in-line with the exit chassis

**Note:** NB 300 Series Controls only work with NB8710 Devices

## 646 Top Strike

- Standard for both Panic & Fire (12-) Hardware
- Surface applied
- Fire Rated
- Black nylon coated

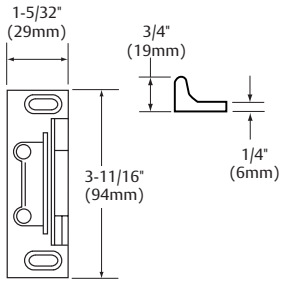


Copyright © 1998-2011, Sargent Manufacturing Company, an ASSA ABLOY Group company. All rights reserved.
Reproduction in whole or in part without the express written permission of Sargent Manufacturing Company is prohibited.

SARGENT®
ASSA ABLOY

# NB-8700 Functions & Trims

## 80 Series

| How to order: | Options | Series | Function | Rail Lgth | Trim | Hand | Outside Finish | Inside Finish | Door Width | Door Height | AFF |
|---|---|---|---|---|---|---|---|---|---|---|---|
| | 12- | NB-87 | 13 | F | ETL | RHR | 26D | 32D | 36" | 84" | 41" |

### 700 Series ET Trim

Exits with ET Trim, specify lever design after the ET designation (e.g., ETL)

### Lever Designs for ET Controls

A, B, E, F, J, L, P, W
Also available with Coastal Series & Studio Collection Levers

### ET Designation with Suffix (Used to order ET without device)

NB-8700 Series: 706-8, 710, 713-8, 715-8, 740, 743-8, 746-8, 773-8 & 774-8

### Freewheeling Trim

The lever rotates when the door is locked preventing excessive force from being applied to the horizontal lever

### Electrified ET Trim

Voltage must be specified for the following functions: 73 and 74. Specify: 12VDC or 24VDC

| SARGENT Function Numbers | ANSI Function Numbers | Description & Cylinder Info (1-3/4" Door) | ANSI Type 2 NB-8700 (Panic & Fire) |
|---|---|---|---|
| 06 | 09 | Key unlocks Trim, Trim retracts latch/ Trim relocks when key is removed #41 Cylinder Supplied | NB-8706 x ET_ |
| 10 | 01 | No outside operation (No Cylinder) | NB-8710 |
| 10 | 02 | No outside operation (No Cylinder) ET Control is used as Pull Only | NB-8710 x ET_ |
| 13 | 08 | Key Outside unlocks/locks trim #41 Cylinder Supplied | NB-8713 x ET_ |
| 15 | 14 | Passage Only (No cylinder) | NB-8715 x ET_ |
| 40 | 02 | Freewheeling Trim - No outside operation (No Cylinder) Dummy Trim | NB-8740 x ET_ |
| 43 | 08 | Freewheeling Trim - Key Outside Unlocks/locks Trim #41 Cylinder Supplied | NB-8743 x ET_ |
| 46 | 09 | Freewheeling Trim - Key unlocks Trim, Trim retracts latch/ relocks when key is removed #41 Cylinder Supplied | NB-8746 x ET_ |
| 73 | | Electrified ET Trim - Fail Safe Power Off, Unlocks Lever (No Cylinder)*** | NB-8773 x ET_ |
| 74 | | Electrified ET Trim - Fail Secure Power Off, Locks Lever (No Cylinder)*** | NB-8774 x ET_ |

**Note:** Exit devices are available in all standard finishes, except 14, 15, 26 & 26D. With these finishes, exit devices are supplied in 32 or 32D to match accordingly. 26 or 26D is automatically supplied when 32 or 32D is specified. For nickel finishes, specify 14/32 or 15/32D to receive nickel finished trims and stainless exit devices.
**Note:** AFF means Above Finished Floor, center line of rail Above Finished Floor
*** Cylinder override is not available with NB-8700 Series Devices

| NB-300 Series Auxiliary Control | SARGENT Function Numbers | ANSI Function Numbers | Description & Cylinder Info (1-3/4" Door) | NB-8700 Panic & Fire |
|---|---|---|---|---|
| NB300 Series Aux. Control | 06 | 12 | Key unlocks Turn, Turn retracts latch/ Turn relocks when key is removed #41 Cylinder Supplied | NB-8710 x 306 |
| | 13 | 11 | Key Outside Unlocks/locks Turn #41 Cylinder Supplied | NB-8710 x 313 |

**Note:** When ordering NB-8700 Series Exit Device x 300 Series Aux. Control, specify 10 Function for the exit.
Example: NB-8710F x NB-306 x RHR x 32D x 42" x 90"

**Note:** NB-300 Series auxiliary controls are only used with NB-8710 Devices.
Auxiliary controls, ordered less hardware, for use with NB-8710 are specified as a NB-306 or NB-313 x finish.

### Options

**NB-8700**

**Mechanical Options:**
12-
16-
19-
31-
36-
37-
43-
53-
54-
55-
56-
56-HK-
57-
58-
76-
85-
86-
87-
AL-
BT-
CPC-
LD-
PL-
SG-
TB-
TL-

**Cylinder Options:**
10-
10-21-
10UL-
10-63-
11-
11-21-
11-60-
11-63-
11-64-
11-70-7P-
11-72-7P-
11-73-7P-
11-65-73-7P-
21-
22-
51-
52-
60-
63-
64-
70-
72-
73-
65-73-
65-73-7P-
73-7P-
81-
82-
F1-82-
83-
F1-83-
84-
BR-
LC-
SC-
SE-

### Available Finishes

| SARGENT Finishes | ANSI Finishes |
|---|---|
| 03 | 605 |
| 04 | 606 |
| 09 | 611 |
| 10 | 612 |
| 10B | 613 |
| 10BL | 614 |
| 14 | 618 |
| 15 | 619 |
| 20D | 624 |
| 26 | 625 |
| 26D | 626 |
| 32 | 629 |
| 32D | 630 |

Copyright © 1998-2011, Sargent Manufacturing Company, an ASSA ABLOY Group company. All rights reserved.
Reproduction in whole or in part without the express written permission of Sargent Manufacturing Company is prohibited.

HW-050

Revision Date:

# Electromagnetic Door Holder/Releases

RIXSON

ASSA ABLOY

ASSA ABLOY, the global leader in door opening solutions

## GENERAL INFORMATION

Electromagnetic door holder/releases are designed for virtually any remote door release applications. They must be used in conjunction with closing devices.

- Fire/smoke barrier doors
  - Door releases when tripped by an alarm or smoke detector
- Private offices
  - Door releases when triggered by a remote switch
- All devices come with a wall/floor portion and a door portion (armature)
- Circuit normally closed
- Door portions have screws and plates to accommodate surface and concealed mounting

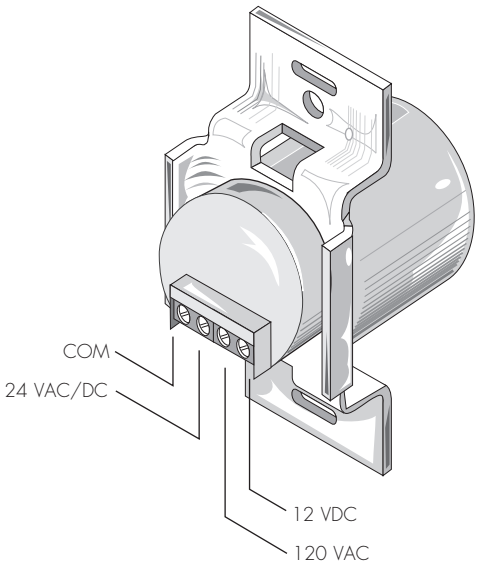


### Features

- 25 to 40 pounds holding power, except where noted
- Fail-safe operation; power failure releases door to close
- Positive release button initiates closing motion
- Tri-volt coils on most models see
- Spotting template included
- For stronger holding forces (50-55 lbs.) specify model and voltage. Not available in tri-volt coils

## CERTIFICATIONS

- Compliant with ANSI/BHMA A156.15 Standards. See individual products for sub sections
- UL/ULC listed
- Listed by California State Fire Marshal

## SPECIFICATIONS

All electromagnetic door holder/releases shall be supplied by architectural hardware supplier. All units shall have a single coil to accommodate 12VDC, 24VAC, 24VDC and 120VAC. The coils shall be independently wound, employing a fuse. Armatures will have positive release button.



Copyright © 2001-2017, Yale Security Inc., an ASSA ABLOY Group company. All rights reserved.
Reproduction in whole or in part without the express written permission of Yale Security Inc. is prohibited.

## SCHEMATICS

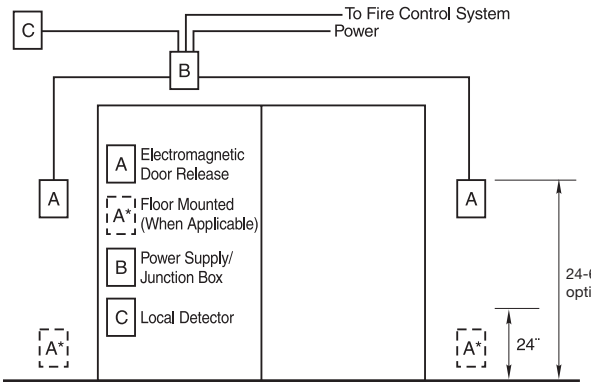


### Operation Narrative

Doors are to be normally held open. The electromagnetic door releases will be energized with the voltage shown (at right) in the hardware set for this opening. Power shall be controlled by the fire control system. It will interrupt the power if alarmed, causing the doors to be released, thus allowing the door closers to close the doors. When power is restored the magnets will re-energize, permitting the doors to be manually returned to their held open position.

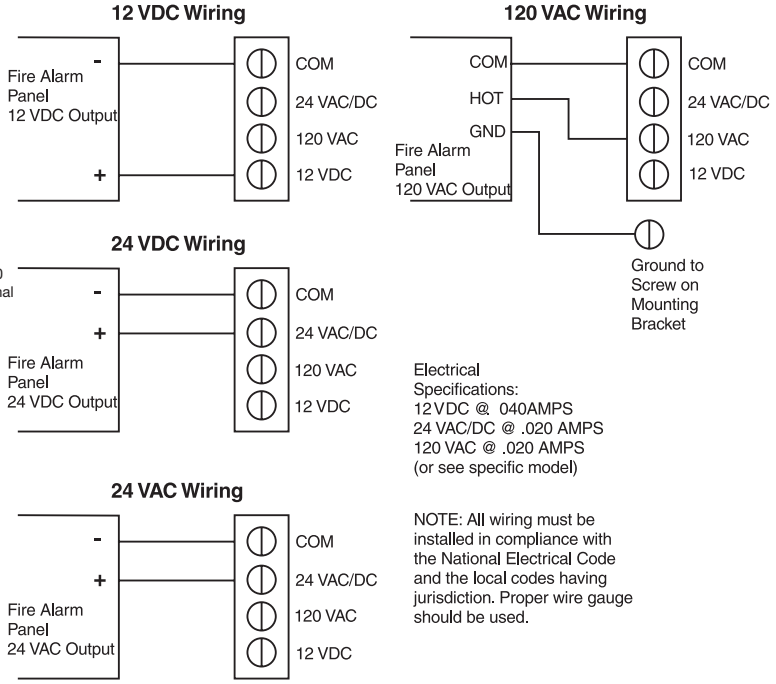


Electrical Specifications:
12 VDC @ 040AMPS
24 VAC/DC @ .020 AMPS
120 VAC @ .020 AMPS
(or see specific model)

NOTE: All wiring must be installed in compliance with the National Electrical Code and the local codes having jurisdiction. Proper wire gauge should be used.

## ACCESSORIES

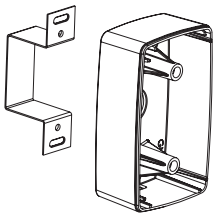

1-1/2" (38mm) Extension (for use only with Models 997M, 998M & 994M) Mounts behind wall cover.

XK996M
Part# 996631M-*

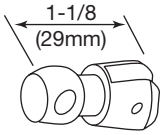


994M Swivel Armature (cannot be used with extension spacers)
Part# 900-3

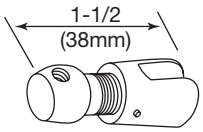


Base Unit Armature Extension Mounts between armature and contact plate.
Part# 900
**Cannot be used with model 994M**

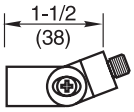


Armature Extension 90° Bend
Part# 900-Z
**Must be used with 900 base unit. Those two pieces will extend armature 3" longer than the contact plate.**

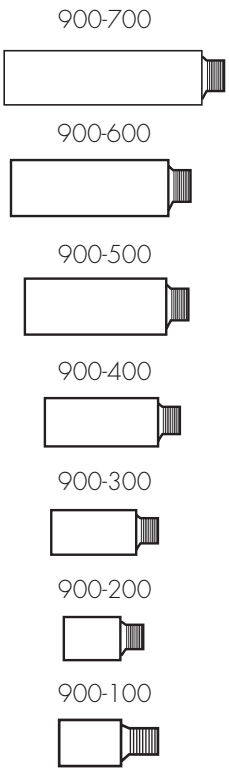


**Spacer lengths – must be used with 900 base**

For dimensions, see chart below

| Extension pieces must be used in conjunction with 900 Base Unit |
|---|
| Part# 900-700 = 7" |
| Part #900-600 = 6" |
| Part# 900-500 = 5" |
| Part# 900-400 = 4" |
| Part# 900-300 = 3" |
| Part# 900-200 = 2" |
| Part# 900-100 = 1" |
| Part# 900-75 = 3/4" |
| Part# 900-50 = 1/2" |



Copyright © 2001-2017, Yale Security Inc., an ASSA ABLOY Group company. All rights reserved.
Reproduction in whole or in part without the express written permission of Yale Security Inc. is prohibited.

# HOW TO ORDER



| **998M**<br>Series | **120VAC**<br>Voltage | **689**<br>Finish |
|---|---|---|

| | |
|---|---|
| 980M | Floor Mounted |
| 981M | Floor Mounted Back to Back Doors |
| 989 | Low Projection Wall Mounted |
| 990M | Low Projection Wall Mounted |
| 991M | Hazardous Location Wall Mounted |
| 993M | High Hold Wall Mounted |
| 9930M | High Hold Floor Mounted |
| 994M | Wall Mounted Adjustable Armature |
| 996M | Surface Mounted |
| 997M | Wall Mounted |
| 998M | Wall Mounted |
| 999M | Universal Wall Mounted |
| 972H | Industrial Swing Door Holder |
| 972S | Industrial Sliding Door Holder |
| 972U | Industrial Overhead/Rolling Door |

| **BLANK** | **TRI-VOLT** |
|---|---|
| 24VAC/DC | *24VAC/DC |
| 12VDC | *12VDC |
| 12VAC | *120VAC |
| 120VAC | *240VAC |
| 240VAC | |

| |
|---|
| 689 Sprayed Alum |
| 690 Sprayed Dk Brz |
| 691 Sprayed Lt Brz |
| 693 Sprayed Black |
| 696 Sprayed Brass |

*When voltage is specified, these electromagnetic door holder/releases will have 50-55 lbs. of holding force.



Copyright © 2001-2017, Yale Security Inc., an ASSA ABLOY Group company. All rights reserved.
Reproduction in whole or in part without the express written permission of Yale Security Inc. is prohibited.

# Astragal and Meeting Stile Gasketing - Split Astragals

- Astragals and meeting stiles with a fire label may be mounted on pairs of doors wherein the gap meets the requirements of **NFPA 80, 6.3.1.7.1 "The clearance between... the meeting edges of doors swinging in pairs on the pull side shall be 1/8" ± 1/16" (3.18mm ± 1.59mm) for steel doors and shall not exceed 1/8" (3.18mm) for wood doors"**
- Order split astragals at two (2) pieces by door height per set of double doors. When ordering add "/2" to the end of the part number to specify 2 pieces (i.e. order quantity 1 each 303AS84/2 to get two lengths at 84 inches)
- Punched with slotted holes for adjustment
- Clear anodized brush products are supplied with gray brush. Painted white brush products are supplied with white brush when available, otherwise black brush is supplied. All other finishes supplied with black brush. Black brush is available for clear anodized and painted white brush products upon request.

## 297_S

AVAILABLE FINISHES:
**A, BDG, D, G, PW, SN**
REPLACEMENT INSERT:
**S3 (BL, W)**
ANSI: **R3E734, R3E735**

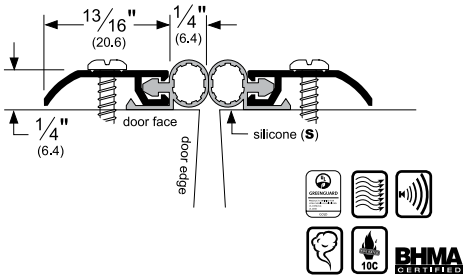


## 303_S

AVAILABLE FINISHES:
**A, BDG, C, D, G, PW, SN**
REPLACEMENT INSERT:
**S3 (BL, W)**
ANSI: **R3E734, R3E735**

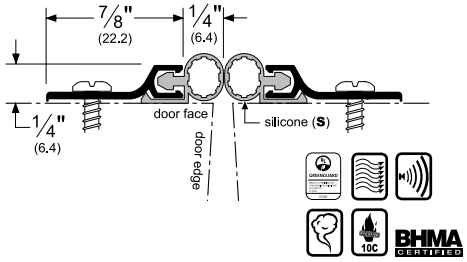


## 305_N

AVAILABLE FINISHES:
**B, C, D, G**
REPLACEMENT INSERT:
**E2 (BL, GR)**
ANSI: **R3G734, R3G735**

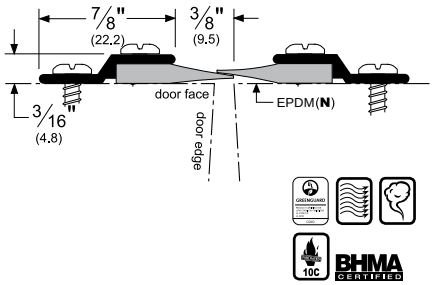


## 329_N

AVAILABLE FINISHES:
**C, D, G, PW**
REPLACEMENT INSERT:
**E2 (BL, GR)**

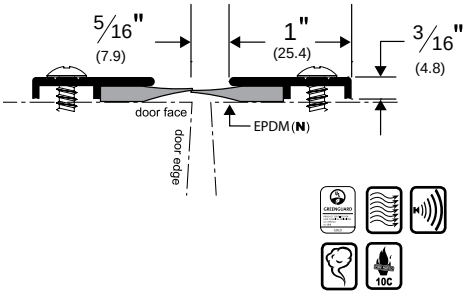


## Alternate Inserts For 297

### 297_PK

AVAILABLE FINISHES:
**A, BDG, D, G, PW, SN**
REPLACEMENT INSERT:
**PK47 (BL, GR)**
ANSI: **R3G734, R3G735**

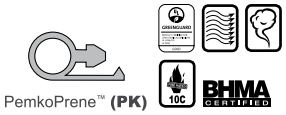


### 297_V

AVAILABLE FINISHES:
**A, BDG, D, G, PW, SN**
REPLACEMENT INSERT:
**EV47 (BL, GR, W)**

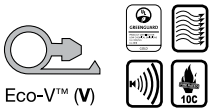


## Alternate Inserts For 303

### 303_PK

AVAILABLE FINISHES:
**A, BDG, C, D, G, PW, SN**
REPLACEMENT INSERT:
**PK47 (BL, GR)**
ANSI: **R3G734**

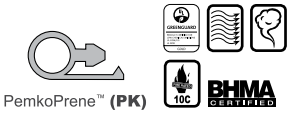


### 303_V

AVAILABLE FINISHES:
**A, BDG, C, D, G, PW, SN**
REPLACEMENT INSERT:
**EV47 (BL, GR, W)**

## 305SSE

AVAILABLE FINISHES:
**SS (#4 Finish)**
REPLACEMENT INSERT:
**E2 (BL, GR)**
ANSI: **R5G734, R5G735**

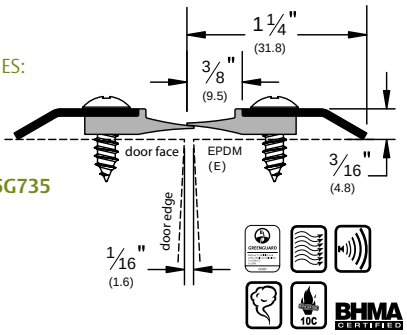


AVAILABLE FINISHES FOR PRODUCTS SHOWN ON THIS PAGE (see General Information section for finish chart)
**A** (Mill Finish Aluminum) **BDG** (Bright Dip Gold Anodized) **C** (Clear Anodized) **D** (Dark Bronze Anodized)
**G** (Gold Anodized) **PW** (Painted White) **SN** (Satin Nickel Anodized)
Special finishes available upon request

ASSA ABLOY

The global leader in door opening solutions



Copyright © 2015, Pemko Manufacturing Co., an ASSA ABLOY Group company. All rights reserved.
Reproduction in whole or in part without the express written permission of Pemko Manufacturing Co. is prohibited.

VingCard Elsafe

ASSA ABLOY

**HW-052**

Revision Date:

ASSA ABLOY, the global leader in door opening solutions

# Installation Manual

# Exit device

# Copyrights

*The information in this document is subject to change at the sole discretion of ASSA ABLOY AB without notice.*

*Any use, operation or repair in contravention of this document is at your own risk. ASSA ABLOY AB does not assume any responsibility for incidental or consequential damages arising from the use of this manual.*

*All information and drawings in this document are the property of ASSA ABLOY AB. Unauthorized use and reproduction is prohibited.*

*VingCard is a registered trademark of ASSA ABLOY AB.*

# Table of contents

1. Introduction ..... 4

2. Dimensions ..... 5

2.1 Dimensions for rim version of exit device ..... 5
2.2 Dimensions for rod version of exit device ..... 6
2.2.1 Top strike for rod version ..... 6
2.2.2 Bottom strike for rod version ..... 6
2.3 Outside escutcheon ..... 6

3. System components ..... 7

3.1 Components in outside escutcheon ..... 7
3.2 Components in rim version of exit device ..... 8
3.3 Components in rod version of exit device ..... 9
3.3.1 Components in glass bead shim kit ..... 10
3.3.2 Components in rod extension kit ..... 11

4. Installation ..... 12

4.1 Preparing the outside escutcheon ..... 12
4.2 Preparing the battery cable in the push bar ..... 13
4.3 Installation of the exit device, rim version ..... 14
4.4 Installation of the exit device, rod version ..... 16

5. Checking the installation ..... 17

5.1 Mechanical check ..... 17
5.2 Functional check ..... 17

Appendix A: Outside template for card reader ..... 18

Appendix B: Inside template for exit device ..... 19

Appendix C: RFID 3G exit device ..... 20

Exploded view and component list ..... 20
RFID 3G specific parts ..... 20
Mounting the upgrade plate ..... 21
Cable connection ..... 22
Removing the front cover ..... 23
Dimensions ..... 23

Appendix D: Endnode kit ..... 24

Introduction ..... 24
Mounting ..... 25

# 1. Introduction

This manual contains

- part dimensions
- a description of *rim version* and *rod version* of exit device with additional parts
- installation procedures
- installation check list
- information about *RFID 3G* specific parts
- information about endnode kit (only applicable for VISIONLINE)

The exit device combines the electronic card lock with a push bar from Sargent. This makes it possible to use encoded cards to control all guest and staff access to the building, and at the same time provide a panic exit device to satisfy all safety considerations for emergency exit. Opening the door from the inside is achieved by simply pushing the push bar.

The exit device is suitable for wood, metal and glazed doors. It is supplied in two versions:

- *rim version* with latch on the side of the door; for horizontal installation
- *rod version* with latch on top and bottom of the door; for vertical installation

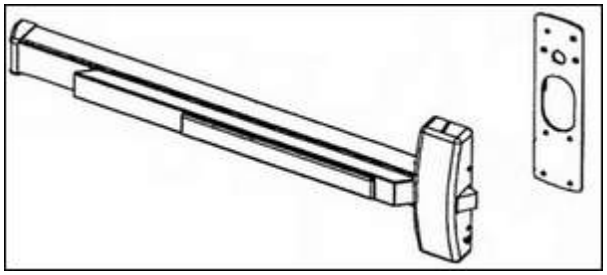

*Figure 1: Rim version of exit device*

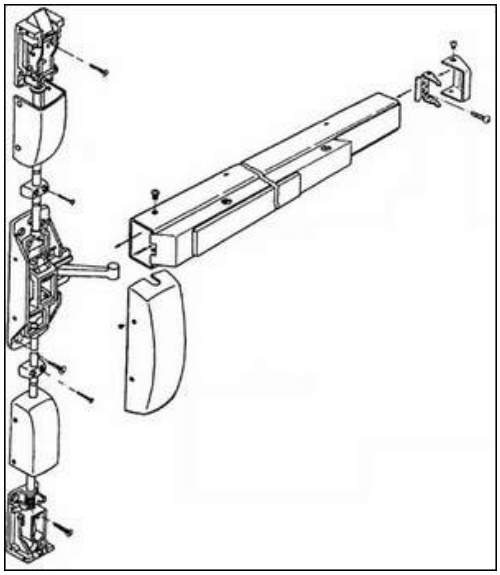

*Figure 2: Rod version of exit device*

# 2. Dimensions

There are two standard lengths for the horizontally installed push bar;
- 92 cm (36'') can be cut to fit other door width, min. 82 cm (32'')
- 122 cm (4'') can be cut to fit other door width, min. 92 cm (36'')

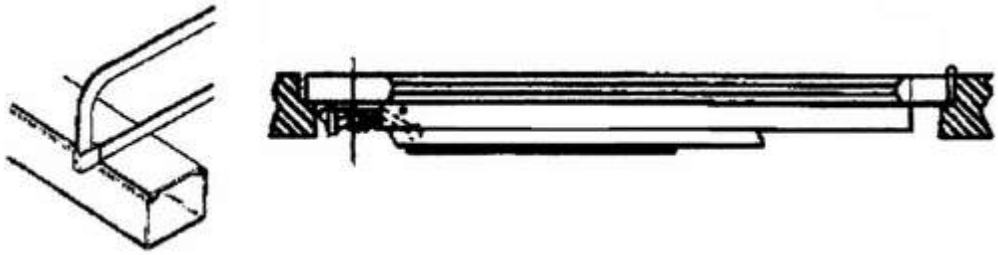

*Figure 3: Push bar*

Dimensions in mm (inches):

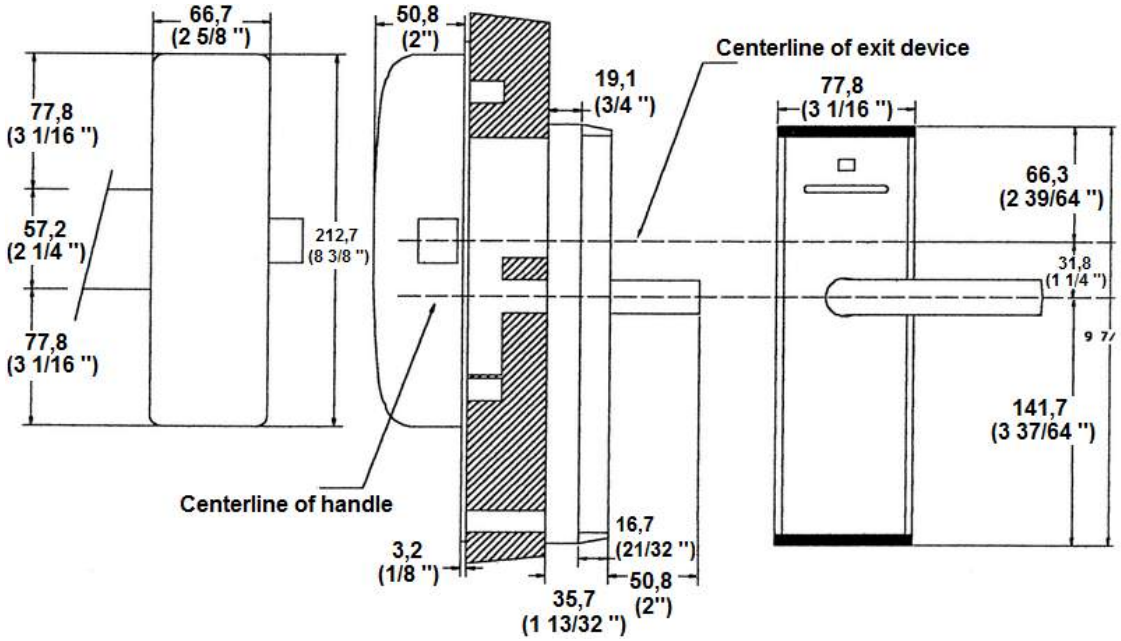


*Figure 4: Dimensions of escutcheon and exit device*

## *2.1 Dimensions for rim version of exit device*

Recommended heights of centerline:

| | |
|---|---|
| Exit device | 1008 mm (4'') above finish floor |
| Escutcheon handle | 976 mm (39 ¾ '') above finish floor |

*Table 1: Dimensions for rim version*

## *2.2 Dimensions for rod version of exit device*

- Standard length for up to 213 cm (84'') doors
- A rod extension kit needs to be ordered for door heights from 213 cm (84'') to 259 cm (102'')

### 2.2.1 Top strike for rod version

Dimensions in mm (inches):

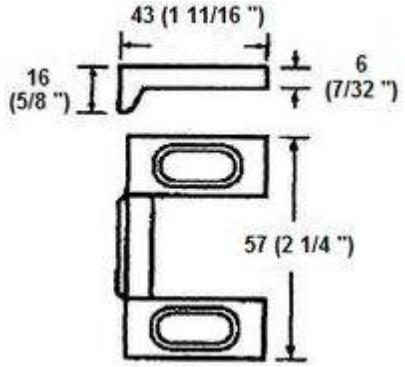


*Figure 5: Top strike 'J' mounted on header of the door*

### 2.2.2 Bottom strike for rod version

Dimensions in mm (inches):

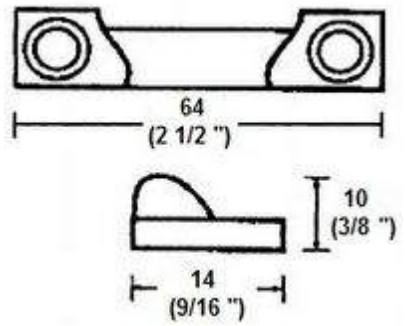


*Figure 6: Bottom strike 'K' mounted on floor*

## *2.3 Outside escutcheon*

The exit device is designed for flush-mounting on the door; see a picture of the escutcheon and its dimensions in Figure 4.

For the rod version of the exit device, a glass bead shim kit is available for doors with glass beads or raised molding with a height of no more than 6mm (¼ ''). See section 3.3.1 for detailed information.

# 3. System components

The outside escutcheon set includes an LCU (l*ock controller unit*) and an electromechanical lock mechanism. The LCU is powered by a 4.5V or 9V battery (9V for older installations only) that is located inside the push bar behind the battery cover plate; see Figure 8 for rim version and Figure 9 for rod version.

The exit device is released mechanically from the inside by pushing on the bar. The door is unlocked from the outside by using a valid key card. The LCU will accept cards programmed in the VISIONLINE, VISION or 2100 system.

## *3.1 Components in outside escutcheon*

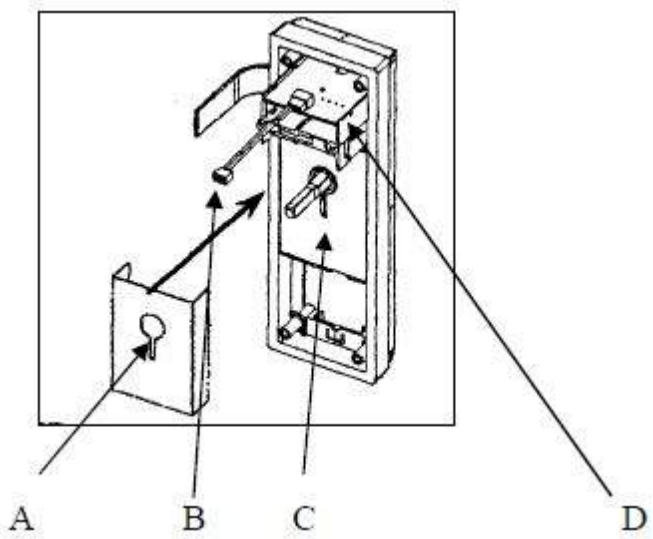


*Figure 7: Components in outside escutcheon*

| Pos | Description |
|---|---|
| A | Protector plate |
| B | Battery cable |
| C | Lock case |
| D | LCU; *lock controller unit* |

*Table 2: Components in outside escutcheon*

### *3.2 Components in rim version of exit device*

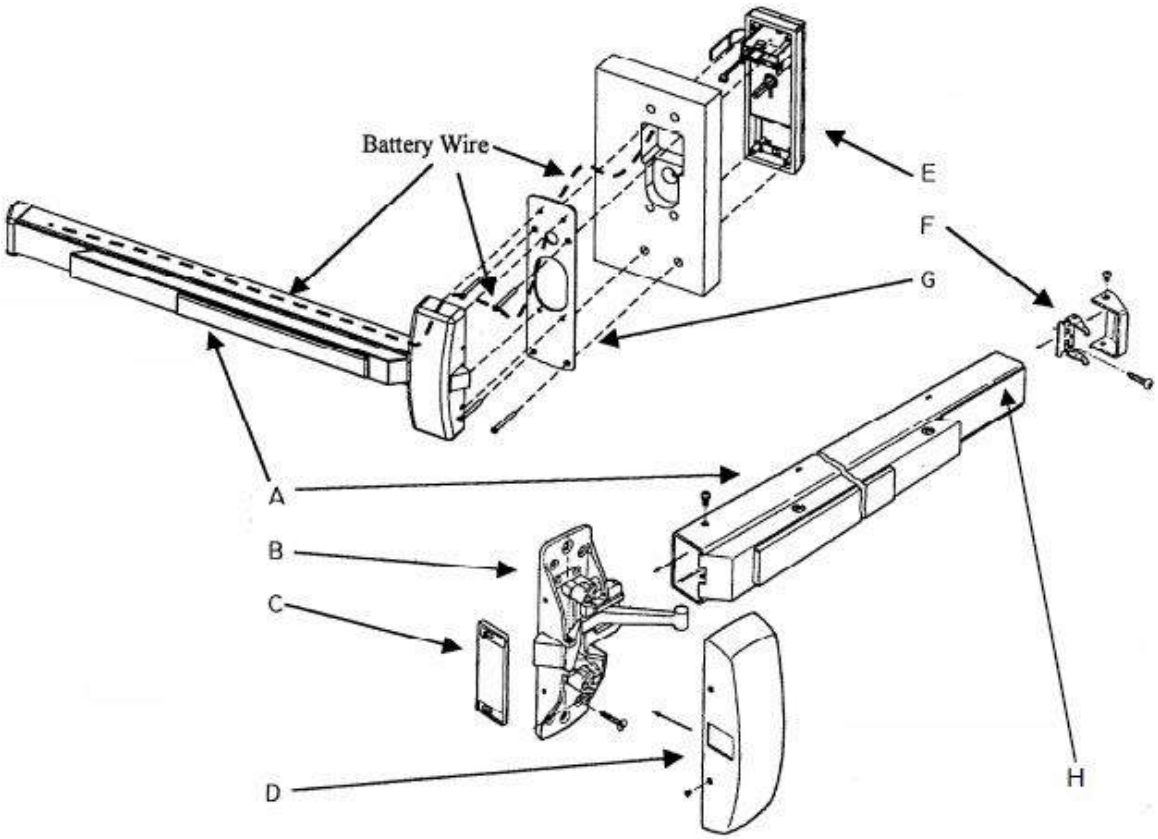


*Figure 8: Components in rim version of exit device*

| Pos | Description |
|---|---|
| A | Push bar |
| B | Lock chassis |
| C | Strike plate |
| D | Lock chassis cover |
| E | Outside escutcheon |
| F | End cap |
| G | Adapter plate |
| H | Battery cover plate |

*Table 3: Components in rim version of exit device*

### *3.3 Components in rod version of exit device*

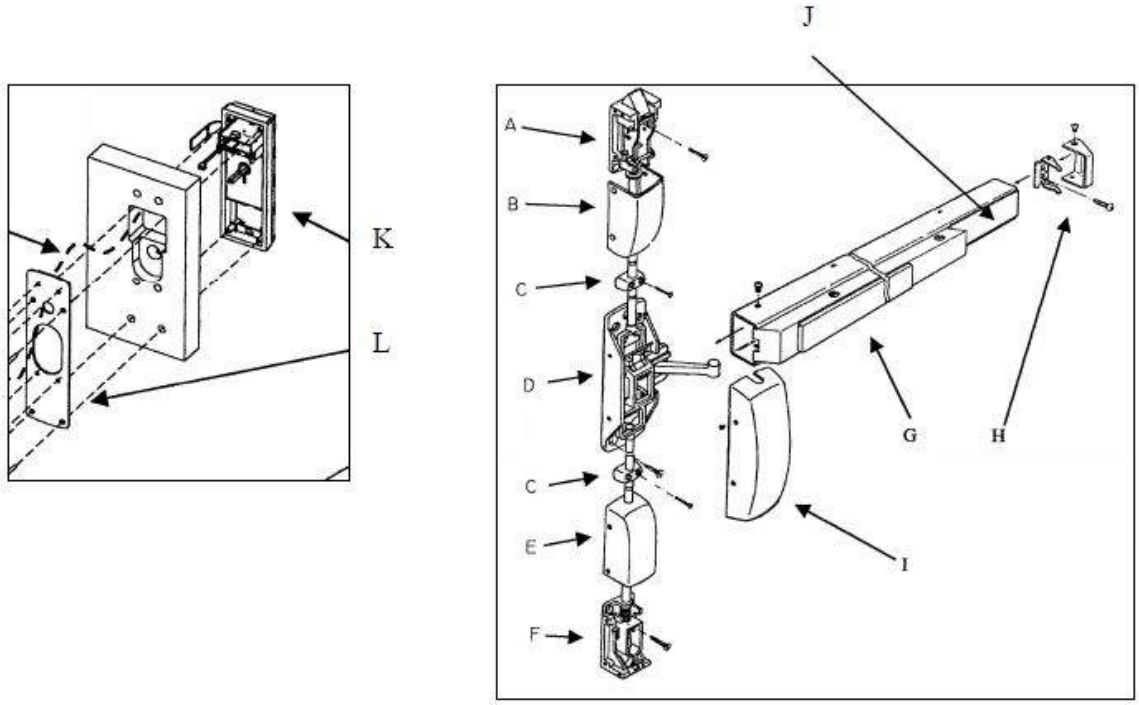


*Figure 9: Components in rod version of exit device*

| Pos | Description |
|---|---|
| A | Top latch chassis |
| B | Top latch cover |
| C | Rod guides |
| D | Lock chassis |
| E | Bottom latch cover |
| F | Bottom latch chassis |
| G | Push bar |
| H | End cap |
| I | Lock chassis cover |
| J | Battery cover plate |
| K | Outside escutcheon |
| L | Adapter plate |

*Table 4: Components in rod version of exit device*

### 3.3.1 Components in glass bead shim kit

On doors with raised molding or glass beads, a special glass bead shim kit *12-587* (see arrows in Figure 10) must be used between the devices and the door.

- the kit consists of two sets of 3 mm shims
- maximum thickness is 6 mm (1/4 '')
- available in PEN and PEB finishes

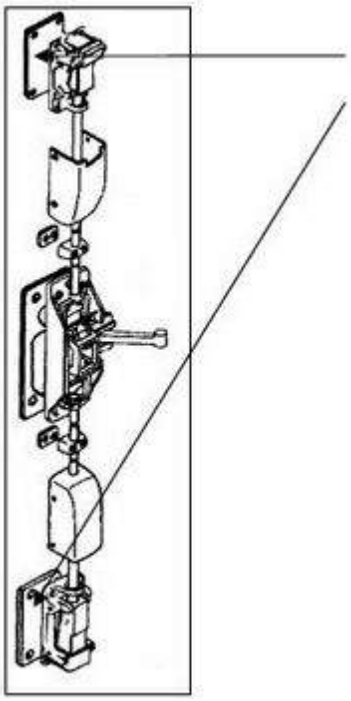

*Figure 10: Glass beam shim kit*

*Note:* Since the thickness of the adapter plate is 3 mm (1/8 ''), one shim set 3 mm (1/8 '') must always be used for rod guides, top strike chassis and bottom strike chassis. Shim for lock chassis should not be used.

*Figure 11: Adapter plate*

### 3.3.2 Components in rod extension kit

For installations of an exit device with rod, be aware when the door height exceeds 2133 mm (84''); in these cases, a rod extension kit must be used. The rod extension kit can be ordered in the following lengths:

- 150 mm (6'')
- 300 mm (12'')
- 450 mm (18'')

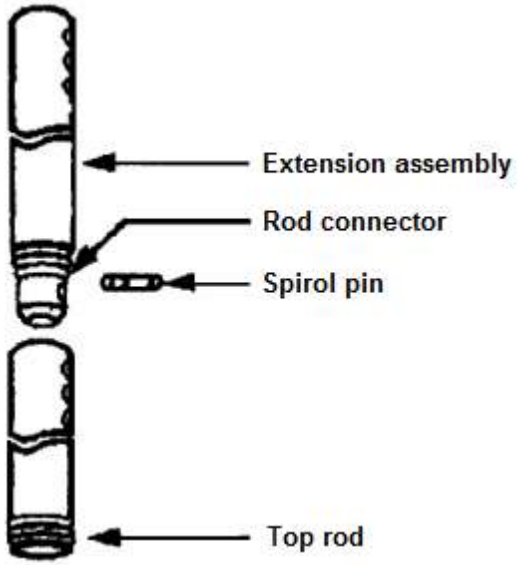


*Figure 12: Rod extension kit*

# 4. Installation

## *4.1 Preparing the outside escutcheon*

1. Make sure that the protector plate is mounted onto the lock case; see Figure 7.
2. Make sure that the label on the handle spindle is facing upwards; label marked *RO* or *LO*. If this is not the case, turn the spindle until it stops with the label upwards.
3. For correct positioning of the exit device at the door, see the applicable one of section 2.1 (rim version) and 2.2 (rod version).
4. Machine the door according to the provided templates; see Appendix A (outside template for card reader) and Appendix B (inside template for exit device).
5. Mount the outside escutcheon to the adapter plate with the four machine screws provided, and make sure to pull the LCU battery cable through the 20mm hole in the adapter plate; see Figure 15.

*Figure 13: Cut-out, push bar side*

*Figure 14: Cut-out, outside escutcheon*

*Figure 15: Adapter plate*

*Figure 16: Outside escutcheon*

### *4.2 Preparing the battery cable in the push bar*

In many cases, the batteries are placed inside the push bar but also other locations are possible. See pictures below for information on how to proceed with the battery cable.

*Figure 17*

1. Insert the battery cable in the push bar; make sure that the connector is facing upwards in the guide groove. Only the connector and the dismantled part of the cable will be seen.

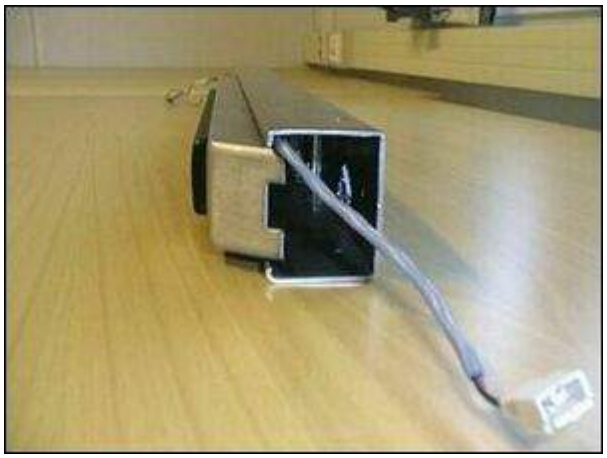

*Figure 18*

2. Push the cable into the guide groove while the push bar is depressed. The cable will follow the guide groove. When the battery cable is slided all the way through the rail, release the push bar.

*Figure 19*

## *4.3 Installation of the exit device, rim version*

*Note:* See section 3.2 for exploded view and component list of the exit device in rim version.

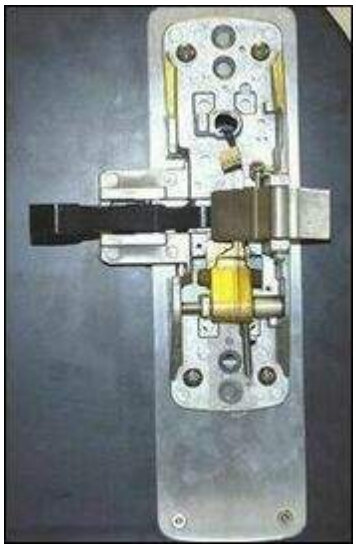

*Figure 20*

1. Mount the lock chassis (B) on the adapter plate with the machine screws provided, and make sure to pull the battery cable through the hole in the lock chassis.

*Figure 21*

2. Mount the push bar (A) on the lock chassis (B) with the machine screws provided; see Figure 21.
3. Connect the battery cable from the push bar to the cable from the LCU.

*Figure 22*

4. Strap the battery cable to the chassis.

*Figure 23*

5. Level the push bar and mount the end cap bracket (F) on the 3 mm (1/8") shim plate with the screws provided; see Figure 23.
6. Connect the battery cable to the battery and press the battery cover plate onto the rail.
7. Hook up the battery cable inside the push bar.
8. Install the strike plate (C).

*Figure 24*

9. Install the cover (D) for the lock chassis (see Figure 24), and the cover for the end cap (see Figure 25).
10. Check that the push bar releases the lock mechanism; see section 5.1 Mechanical check for details.
11. Load the applicable lock firmware into the LCU using a service device with the *Lock Service* software (see *Quick reference guide Lock Service*), or the HCU.
12. Test for proper card operation; see section 5.2 Functional check for details.

*Figure 25*

## *4.4 Installation of the exit device, rod version*

*Note:* See section 3.3 for exploded view and component list of the exit device in rod version.

1. Mount the push bar (G) on the lock chassis (D) with the machine screws provided.
2. Connect the battery cable from the push bar to the cable from the LCU (*lock controller unit*).
3. Strap the battery cable to the chassis; see Figure 26.

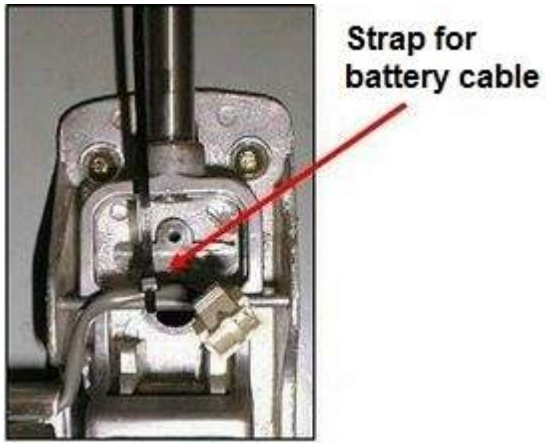


*Figure 26*

4. Level the push bar and mount the end cap bracket (H) on the 3 mm (1/8'') shim plate with the screws provided.
5. Mount the top latch chassis (A) on the 3 mm (1/8'') shim plate according to the templates delivered with the exit device.
6. Install the top strike according to the templates delivered with the exit device.
7. Mount the cover (B) for the top latch chassis with the screws provided.
8. Mount the bottom latch chassis (F) on the 3 mm (1/8'') shim plate according to the templates delivered with the exit device.
9. Install the bottom strike according to the templates delivered with the exit device.
10. Mount the cover (E) for the bottom latch chassis with the screws provided.
11. Install the rod guides (C).
12. Connect the battery cable to the battery and press the battery cover plate onto the rail.
13. Hook up the battery cable inside the push bar.
14. Install the top and bottom strike plates according to the templates delivered with the exit device.
15. Install the cover (I) for the lock chassis and the cover for the end cap.
16. Check that the push bar releases the lock mechanism; see section 5.1 Mechanical check for details.
17. Load the applicable lock firmware into the LCU using a service device with the *Lock Service* software (see *Quick reference guide Service PC*), or the HCU. *Note:* HCU is not applicable for the RFID 3G exit device.
18. Test for proper card operation; see section 5.2 Functional check for details.

# 5. Checking the installation

## *5.1 Mechanical check*

1. Check that the exit device latch goes smoothly into the strike plate when the door is closed.
2. Check that the push bar moves freely back into position after it has been depressed.
3. Check that when depressing the push bar, the parts inside the rail do not inhibit the push bar from movement.
4. Check that the latch can be freely moved in and out from the exit device chassis.
5. *For rod installation*: make sure that the vertical rod extension moves freely when the push bar is depressed.
6. *For rod installation*: make sure that the latches in the top latch chassis and bottom latch chassis move freely.
7. *For rod installation*: make sure that the exit device top latch and/or bottom latch goes smoothly into the strike plates when the door is closed.

## *5.2 Functional check*

1. Insert a valid key card into the LCU in the outside escutcheon; the LED will illuminate with a green flash.
2. Enter the room by depressing the handle.

# Appendix A: Outside template for card reader

Dimensions in mm (inches)

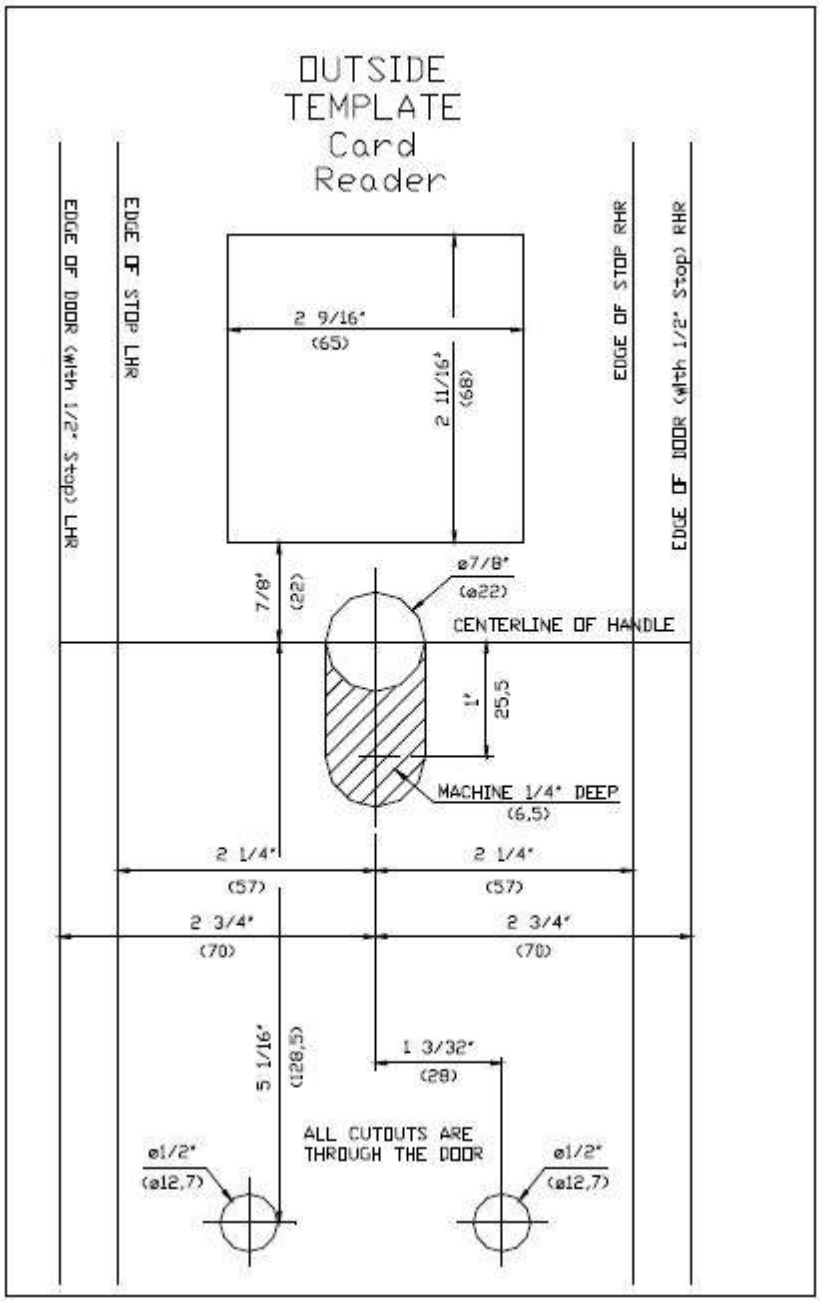

# Appendix B: Inside template for exit device

Dimensions in mm (inches)

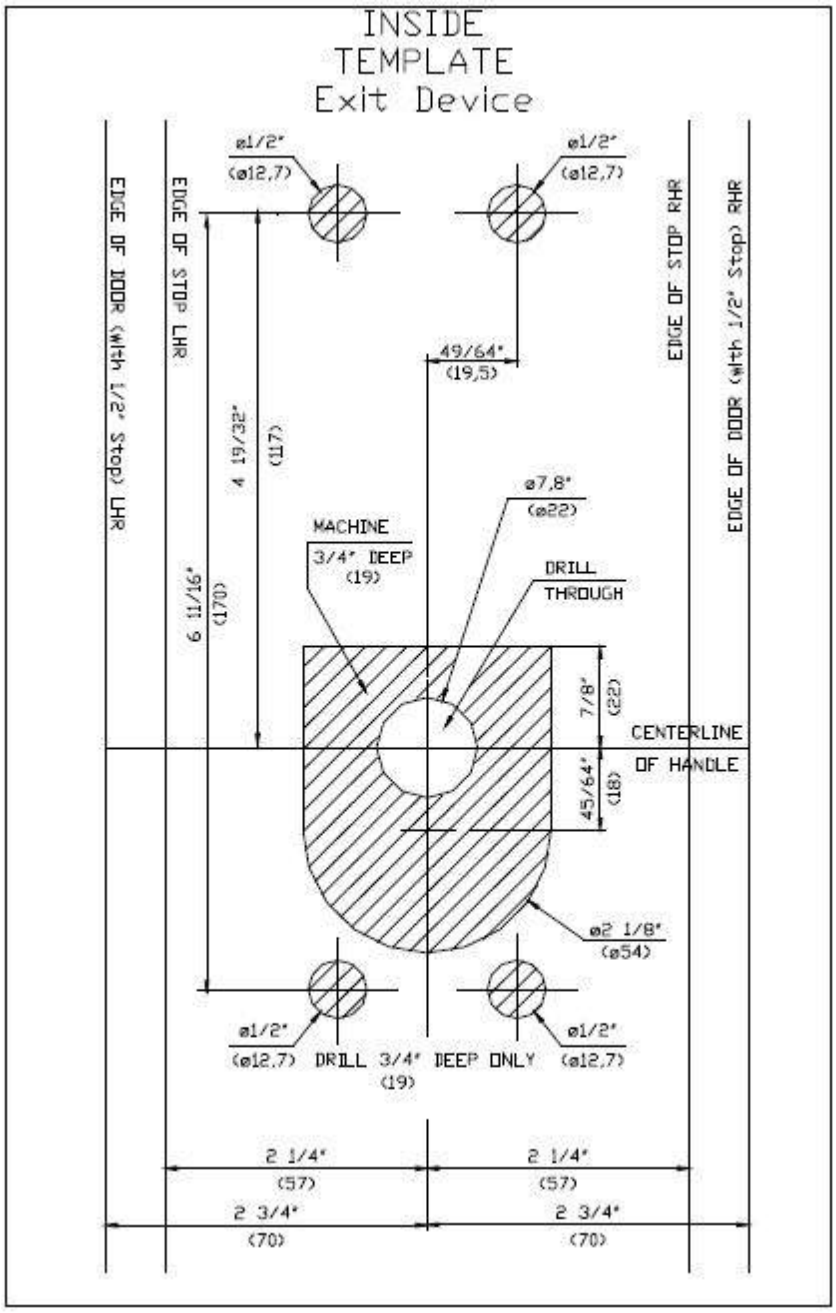

# Appendix C: RFID 3G exit device

## *Exploded view and component list*

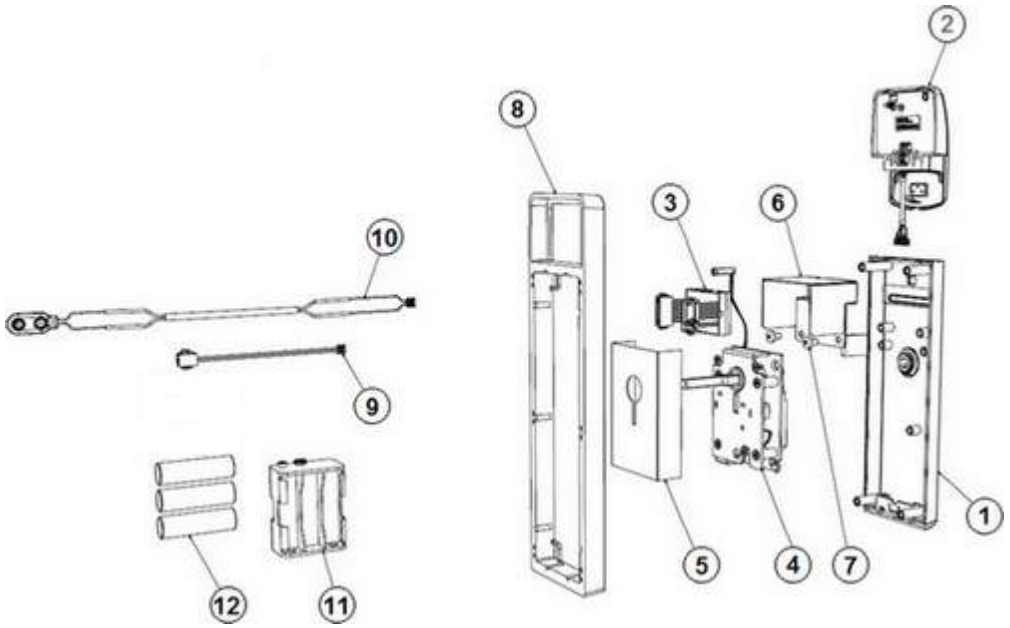


*Figure C1: Exploded view of Classic RFID 3G*

*Note:* If upgrading an old exit device installation to RFID 3G, the 9V electronics is kept and 9V (6AA) batteries are used instead.

## *RFID 3G specific parts*

| Pos | Description |
|---|---|
| 1 | Front escutcheon |
| 2 | 4823880 RFID 3G module, assy- |
| 3 | LCA 6343 (lock case adapter) |
| 4 | Lock case for escutcheon |
| 5 | Protection |
| 6 | Upgrade plate |
| 7 | Screw, machine, pan, M5x8 |
| 8 | Frame |
| 9 | Cable ext., 2p IDC 2p IDC |
| 10 | Battery cable for exit device |
| 11 | Battery holder 4.5V |
| 12 | 3 batteries, LR6- AA |

*Table C1: RFID 3G specific parts for exit device*

# Appendix C: RFID 3G exit device

## *Mounting the upgrade plate*

Mount the upgrade plate using the mounting brackets normally used for the mag LCU. The *LCA 6343* is to be mounted inside the upgrade plate. Either tape or Velcro (not included) can be used to fasten the LCA.

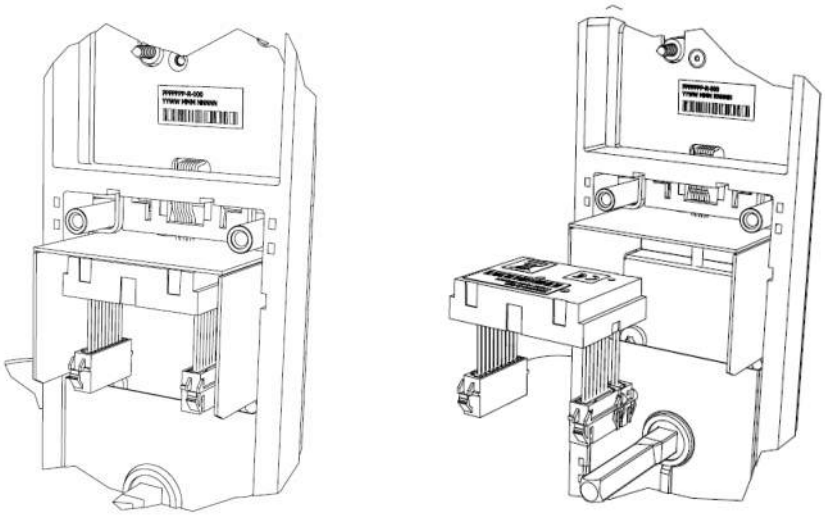

*Figure C2: Mounting of LCA and upgrade plate*

# Appendix C: RFID 3G exit device

## *Cable connection*

*Figure C3*

1. When the RFID 3G module has been mounted on the front escutcheon, slide the cable from the RFID 3G module through the hole marked with red in Figure C3.

*Figure C4*

2. Connect the cable from the RFID module to the LCA; the LCA is marked with red in Figure C4 (also see exploded view here).

*Figure C5*

3. To avoid squeezing the cables, place them inside the upgrade plate according to Figure C5.

# Appendix C: RFID 3G exit device

### *Removing the front cover*

Press the two wings on top of the cover (marked with arrows in the left picture below), and at the same time pull the cover according to Figure C6.

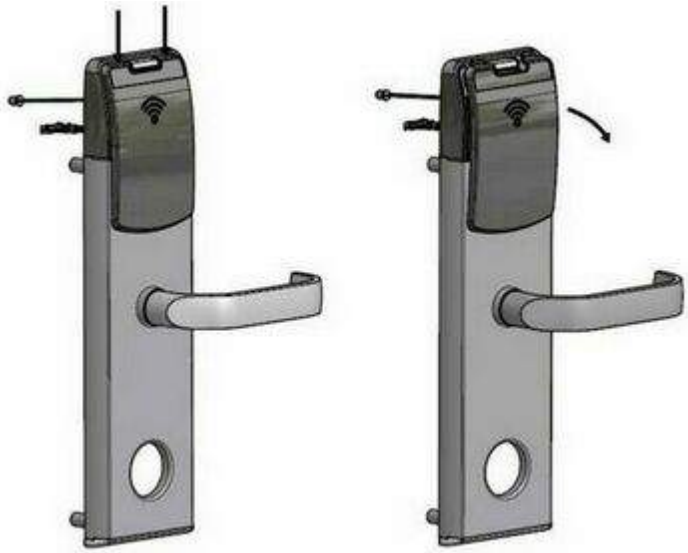

*Figure C6*

### *Dimensions in mm (inches)*

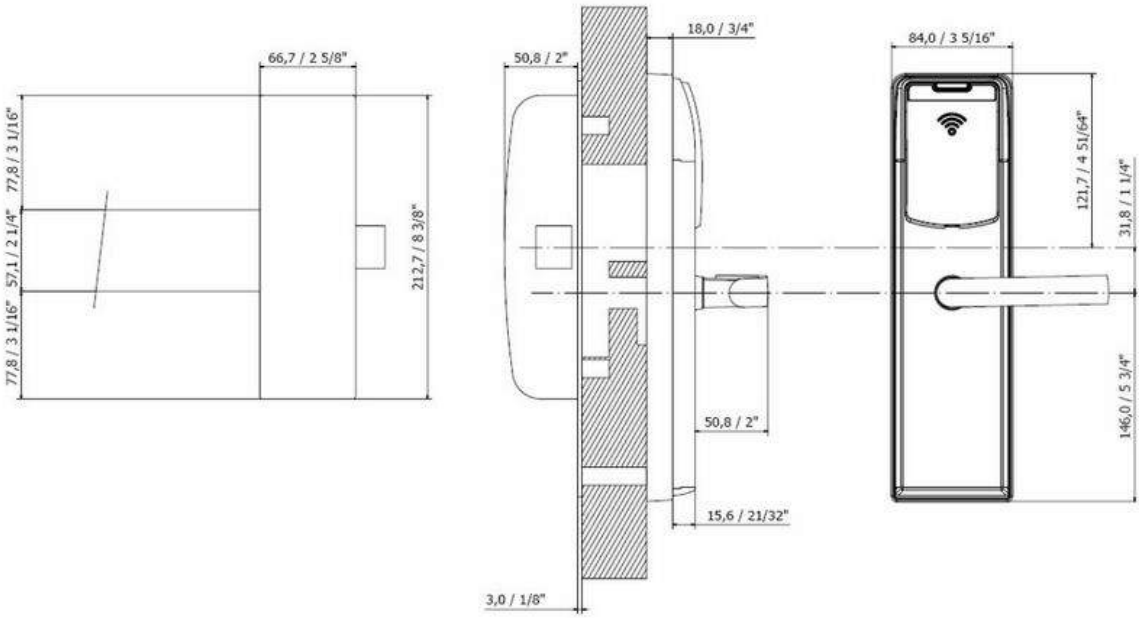


*Figure C7*

# Appendix D: Endnode kit

## *Introduction*

If the exit device should be online (only applicable for VISIONLINE), an endnode kit must be mounted on the escutcheon according to the instruction Mounting of endnode kit in this appendix. The endnode kit consists of the parts shown in Figure D1.

*Note:* The endnode itself (see Figure D2) is sold separately.

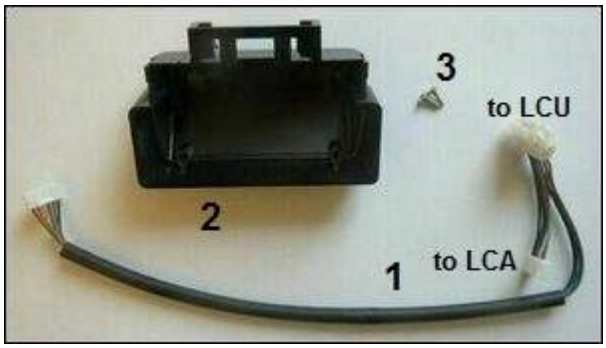


*Figure D1: Endnode kit for exit device: Y-cable, endnode holder and screws*

| Pos | Description |
|---|---|
| 1 | Y-cable |
| 2 | Endnode holder |
| 3 | Screw, WN 1423 K25x8 |

*Table D1: Parts included in the endnode kit*

*Figure D2: Endnode*

# Appendix D: Endnode kit

## *Mounting of endnode kit*

*Figure D3*

1. Before the endnode kit is mounted, the escutcheon has an end plug which looks as in Figure D3.
2. Use a pliers to remove the end plug.

*Figure D4*

3. Figure D4 shows the back of the endnode holder. On top of the holder are the hooks (see close-up in Figure D5) that should be snapped onto the escutcheon according to step 4 on next page.

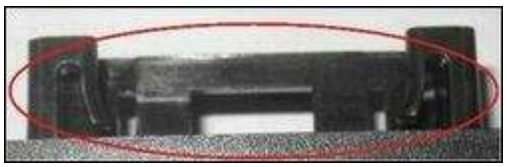

*Figure D5*

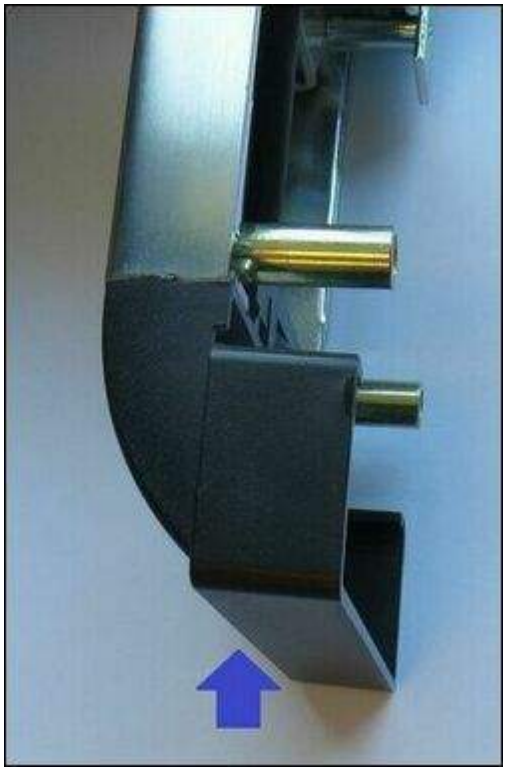

*Figure D6*

4. Snap the endnode holder onto the escutcheon in the direction shown with the blue arrow in Figure D6. Make sure that the holder snaps into the correct position.

*Figure D7*

5. Thread the Y-cable from the inside of the escutcheon through the hole in the endnode holder; place the endnode in the holder (but do not fasten the endnode with screws at this point). Connect the Y-cable to the endnode as shown in Figure D7.

*Figure D8*

6. Pull the cable protection down so it covers the escutheon metal, i.e. so that the distance between contact and cable protection is approximately 15 mm (19/32 '').

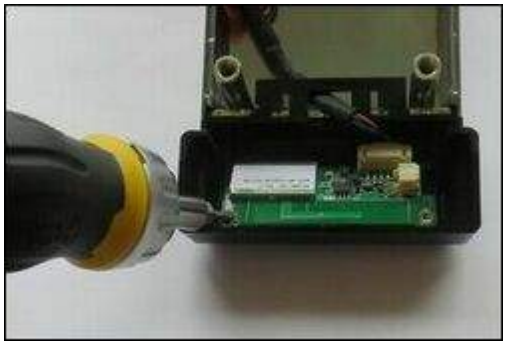

*Figure D9*

7. Fasten the endnode in the endnode holder with the two screws that are enclosed with the endnode kit; a Torx T8 driver is needed.

*Figure D10*

8. Pull the Y-cable on the same side of the lock case as where the retaining mechanism (motor) is located. Figure D10 shows an example where the retaining mechanism (marked with red) is located on the left side.

Close-up of the motor:

*Figure D11*

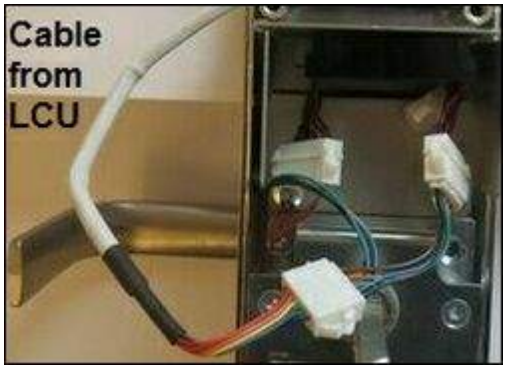


*Figure D12*

9. The contacts from the Y-cable should be connected to the LCU and LCA respectively according to Figure 12.

*Figure D13*

10. Mount the frame.
11. Connect the battery cable to the contact marked with red in Figure 13.
12. Mount the escutcheon on the door.

# Revision history

| Date | Change | By |
|---|---|---|
| March 3, 2012 | Updated version (added RFID 3G incl endnode kit) | KG |
| July 3, 2013 | Updated version (new endnode and Y-cable) | KG |

| HW-052 |
| --- |
| Revision Date: |

Asia / Pacific:
E-mail: aspac@vcegroup.com
Phone: +65 67 48 7 227

Europe / Middle East / Africa:
E-mail: emea@vcegroup.com
Phone: +47 69 24 50 00

Latin America:
E-mail: lam@vcegroup.com
Phone: +52 55 36 40 12 14

North America:
E-mail: noram@vcegroup.com
Phone: +1 972 907 2273

# AD8500 Narrow Design Rim Exit Device for Aluminum Doors

**80 Series**

**HW-053**
Revision Date:

SARGENT
ASSA ABLOY

## AD8500 Series
**Narrow Design Rim Exit Device**

## AD8500 Features

- Designed for narrow stile applications (e.g., aluminum frame full glass doors)
- Single and double doors with mullion
- Single point rim latching device
- Quiet operation and solid security
- Devices are ANSI A156.3 – 2008 Grade 1
- Available Windstorm-rated; order WS-

## Specifications for AD8500 Series Exit

| | |
|---|---|
| Door Types | Aluminum 1-3/4" (44mm) minimum thickness.<br>For doors over 1-3/4" to 2-1/4" thick, specify thickness and order as 31- option. 1-3/4" (114mm) minimum stile |
| Rail sizes as determined by door width | Rails are available in 4 sizes, use door width to determine size needed. Rails will be factory cut to size, if door width is supplied<br>• E Rail for 24" to 32" door widths<br>• F Rail for 33" to 36" door widths<br>• J Rail for 37" to 42" door widths<br>• G Rail for 43" to 48" door widths |
| Strike | 649 Strike, Supplied standard for fired rated devices on non fired rated devices |
| Dogging Feature | Hex key dogging standard; specify 16- for cylinder dogging (#41 cylinder supplied) |
| Electric Options | AL- Alarm<br>BT- Beacon™<br>PL- SARGuide Photoluminescent Coated<br>TL- SARGuide Illuminated Touchpad<br>53- LX Latchbolt Monitor<br>54- Outside Lever Monitoring<br>55- Request-to-Exit Signal - Rail Monitoring<br>56- ELR Remote Latch Retraction<br>57- Delay Egress & Electromagnets<br>58- Electric Dogging<br>59- Electroguard – Self Contained Delayed Egress |
| Mounting Fasteners | Supplied standard with wood and machine screws<br>Available with through-bolts and mortise (sex) nuts |
| Latch Bolt | Stainless steel, 3/4" (19mm) throw |
| Device Centerline from Finished Floor | 41" (1041 mm) for Standard Applications |
| Center Case Dimensions | 8-5/16" (211mm) x 1-1/16" (27mm) |
| Projection | Pushbar Neutral – 3" (77mm)<br>Pushbar Depressed – 2-1/8" (54mm) |

## 649 Standard Strike

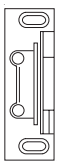

- Surface applied
- Black nylon coated

## 651 Mullion Stabilizer Kit

- Stabilizer block
- Furnished standard w/650A Mullion
- Order as a 651 Kit

## 535 Kit for Windstorm Applications (WS-AD8500)

- Two Chassis Shims and Two End Cap Shims
- Shims are 1/8" for a total height of 1/4"

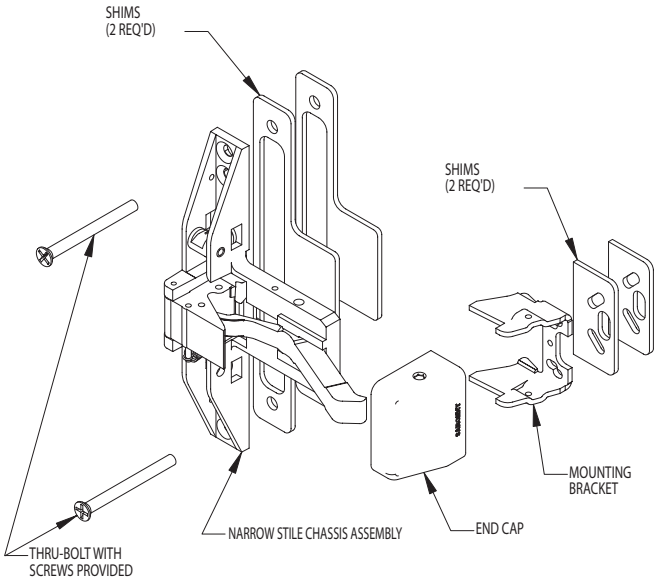


Copyright © 1998-2011, Sargent Manufacturing Company, an ASSA ABLOY Group company. All rights reserved.
Reproduction in whole or in part without the express written permission of Sargent Manufacturing Company is prohibited.

SARGENT®
ASSA ABLOY

# AD8500 Narrow Design Rim Exit Device

## 80 Series

| How to order: | Options | Series | Function | Rail Lgth | Trim | Hand | Outside Finish | Inside Finish | Door Width |
|---|---|---|---|---|---|---|---|---|---|
| | F1-83-56 | AD85 | 13 | F | ETL | RHR | 15 | 32D | 36" |

### 700 Series ET Trim

Exits with ET Trim, specify lever design after the ET designation (e.g., ETL)

### Lever Designs for ET Controls

A, B, E, F, J, L, P, W

Also available with Coastal Series & Studio Collection Levers

### ET Designation with Suffix (Used to order ET without device)

AD8500 Series: 704, 706-8, 710, 713-8, 715-8, 740, 743-8, 744, 746-8, 773-8 & 774-8

### Freewheeling Trim

The lever rotates when the door is locked preventing excessive force from being applied to the horizontal lever

### Electrified ET Trim

Voltage must be specified for the following functions: 73 and 74. Specify: 12VDC or 24VDC

| SARGENT Function Numbers | ANSI Function Numbers | Description & Cylinder Info. (1-3/4" Door) | ANSI Type 4 AD8500 Panic |
|---|---|---|---|
| 04 | 03 | Night Latch<br>Key Retracts Latch<br>#34 Cylinder Supplied | AD8504 x ET_ |
| 06 | 09 | Key unlocks Trim, Trim retracts latch/<br>Trim relocks when key is removed<br>#41 Cylinder Supplied | AD8506 x ET_ |
| 10 | 01 | No outside operation (No Cylinder) | AD8510 |
| 10 | 02 | No outside operation (No Cylinder)<br>ET Control is used as Pull Only | AD8510 x ET_ |
| 13 | 08 | Key Outside Unlocks/locks Trim<br>#41 Cylinder Supplied | AD8513 x ET_ |
| 15 | 14 | Passage Only (No cylinder) | AD8515 x ET_ |
| 40 | 02 | Freewheeling Trim -<br>No outside operation<br>(No Cylinder) Dummy Trim | AD8540 x ET_ |
| 43 | 08 | Freewheeling Trim -<br>Key Outside Unlocks/locks Trim<br>#41 Cylinder Supplied | AD8543 x ET_ |
| 44 | 03 | Freewheeling Trim -<br>Key Retracts Latch<br>#34 Cylinder Supplied | AD8544 x ET_ |
| 46 | 09 | Freewheeling Trim -<br>Key unlocks Trim, Trim retracts latch/<br>Trim relocks when key is removed<br>#41 Cylinder Supplied | AD8546 x ET_ |
| 73 | | Electrified ET Trim - Fail Safe<br>Power Off, Unlocks Lever (No Cylinder)*** | AD8573 x ET_ |
| 74 | | Electrified ET Trim - Fail Secure<br>Power Off, Locks Lever (No Cylinder)*** | AD8574 x ET_ |

**Note:** Exit devices are available in all standard finishes, except 14, 15, 26 & 26D. With these finishes, exit devices are supplied in 32 or 32D to match accordingly. 26 or 26D is automatically supplied when 32 or 32D is specified. For nickel finishes, specify 14/32 or 15/32D to receive nickel finished trims and stainless exit devices.
*** Cylinder override is not available with AD8500 Series Devices

### Options

**AD8500**

**Mechanical Options:**
16-
19-
31-
36-
37-
43-
53-
54-
55-
56-
56-HK-
57-
58-
59-
BC-59-
76-
85-
86-
87-
AL-
BT-
CPC-
GL-
LD-
PL-
SG-
TL-
WS-

**Cylinder Options:**
10-
10-21-
10UL-
10-63-
11-
11-21-
11-60-
11-63-
11-64-
11-70-7P-
11-72-7P-
11-73-7P-
11-65-73-7P-
21-
22-
51-
52-
60-
63-
64-
70-
72-
73-
65-73-
65-73-7P-
73-7P-
81-
82-
F1-82-
83-
F1-83-
84-
BR-
LC-
SC-
SE-

### Trim designations

**Series**

AD8500 Panic

| Pull Trim Section | SARGENT Function Numbers | ANSI Function Numbers | Description & Cylinder Info. (1-3/4" Door) | AD8500 Panic |
|---|---|---|---|---|
| 862 Pull | 04 | 03 | Night Latch<br>Key Retracts Latch<br>#34 Cylinder Supplied | AD8504 x 862<br>Pull only |
| | 10 | 02 | 862 Pull Only<br>(Optional Pulls: 863 & 864) | AD8510 x 862<br>Pull only |

### Available Finishes

| SARGENT Finishes | ANSI Finishes |
|---|---|
| 03 | 605 |
| 04 | 606 |
| 09 | 611 |
| 10 | 612 |
| 10B | 613 |
| 10BL | 614 |
| 14 | 618 |
| 15 | 619 |
| 20D | 624 |
| 26 | 625 |
| 26D | 626 |
| 32 | 629 |
| 32D | 630 |

Copyright © 1998-2011, Sargent Manufacturing Company, an ASSA ABLOY Group company. All rights reserved.
Reproduction in whole or in part without the express written permission of Sargent Manufacturing Company is prohibited.

# ELECTROMAGNETIC DOOR HOLDER/RELEASES
# WALL MOUNTED

**HW-054**
Revision Date:

RIXSON
ASSA ABLOY

## MODEL 997

### Application
- Wall Mount
- Concealed Wiring
- ANSI/C00011

### Product Description & Features
- Total Projection: 2-5/8" (67mm)
- Mounting Requirements: 2" x 4" x 1-3/4" (51 x 102 x 45mm) outlet box
- Wall must be properly reinforced and outlet box adequately fastened

### Technical Information
- Voltage and Current:
  120VAC, 60Hz., .020 amp
  24VAC/DC, 60Hz., .020 amp
  12VDC, .040 amp
- For 50-55 lbs. of holding force, specify voltage
  120VAC, 60Hz .017 amp
  24VAC, 60Hz .080 amp
  24VDC, .068amp
  12VDC, .180amp
  240VAC, 50/60Hz. .009 amp
- Shipping Weight: 2 lbs. (0.9 kg)

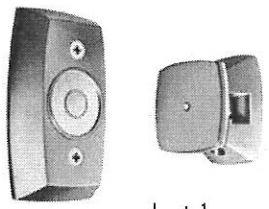

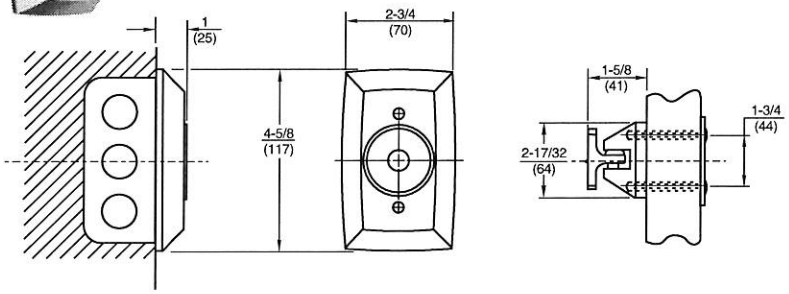


## MODEL 998

### Application
- Wall Mount
- Concealed Wiring
- ANSI/C00011

### Product Description & Features
- Total Projection: 3-5/8" (92mm)
- Mounting Requirements: 2" x 4" x 1-3/4" (51 x 102 x 45mm) outlet box
- Wall must be properly reinforced and outlet box adequately fastened

### Technical Information
- Voltage and Current:
  120VAC, 60Hz., .020 amp
  24VAC/DC, 60Hz., .020 amp
  12VDC, .040 amp
- For 50-55 lbs. of holding force, specify voltage
  120VAC, 60Hz .017 amp
  24VAC, 60Hz .080 amp
  24VDC, .068amp
  12VDC, .180amp
  240VAC, 50/60Hz. .009 amp
- Shipping Weight: 2-1/2 lbs. (1.1 kg)

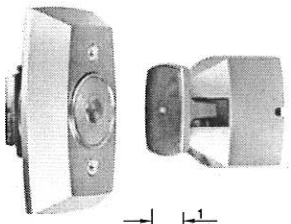

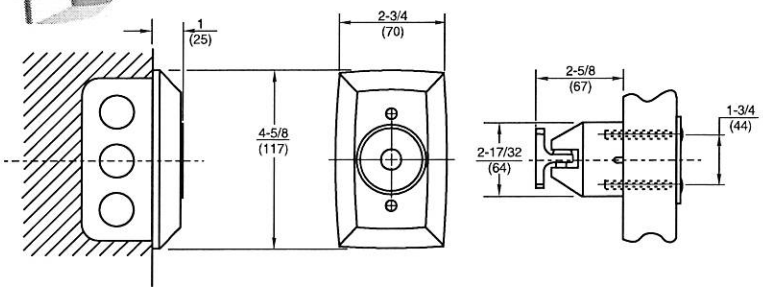




Copyright © 2015, Yale Security Inc., an ASSA ABLOY Group company. All rights reserved.
Reproduction in whole or in part without the express written permission of Yale Security Inc. is prohibited.

Electrical

Issue Date: 28 JUL 2017

Revision Date: 29 JAN 2018

| | |
|---|---|
| Item Name | Wall Outlet |
| Description: | Tamper resistant pop-out outlet, 2-gang with USB |
| Manufacturer: | Legrand |
| Model #: | Pop-out outlet: ARPTR152GW2ALOFT;<br>USB Outlet: ARUSBW4;<br>2-Gang Wall Plate: AWP2GBL4 |
| Color: | Pop-out outlet and USB: white; 2-Gang Wall Plate: Pale Blue |
| Lead Time: | To be verified |
| Warranty: | All materials, information, products and services are provided 'as is' with no warranties or guarantees whatsoever. |

## SPECIAL INSTRUCTIONS

MANUFACTURER

Legrand (877) 295-3472

Nancy Snyder (978) 807.0515 nancy.snyder@legrand.us

ALTERNATE MANUFACTURER 1

ALTERNATE MANUFACTURER 2

ALTERNATE MANUFACTURER 3

AREAS

Public Space

Lobby (Re:Mix)

Issue Date: 28 JUL 2017

Revision Date: 29 JAN 2018

| | |
|---|---|
| Item Name | Power + Data Outlet and Light Switch Faceplates |
| Description: | Outlet/Switches device and covers. Lighting switches with rocker style switch |
| Manufacturer: | Legrand |
| Model #: | Radiant |
| Color: | Black |
| Lead Time: | TBD |
| Warranty: | All materials, information, products and services are provided 'as is' with no warranties or guarantees whatsoever. |

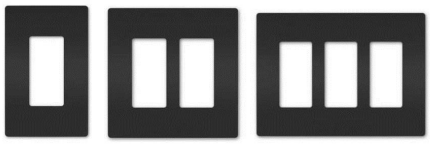

## SPECIAL INSTRUCTIONS

MANUFACTURER

Legrand (877) 295-3472

Nancy Snyder (978) 807.0515 nancy.snyder@legrand.us

ALTERNATE MANUFACTURER 1

ALTERNATE MANUFACTURER 2

ALTERNATE MANUFACTURER 3

AREAS

See Area Addendum

# EL-002

Revision 1

Electrical

| | | | |
|---|---|---|---|
| Project: | Public Spaces | Issue Date: | 07/28/2017 |
| Project #: | ALOFT Hotels G4.0 | Revision Date: | 01/29/2018 |

| Public Space |
|---|
| Location |
| Bar (W XYZ) |
| Pool (Splash) Restroom (w/c) |
| BOH Corridor |
| Break Room |
| Business Center (In Touch) |
| Chute |
| Clean |
| Electrical |
| Elevators |
| Elevator Machine Room |
| Employee Toilet (w/c) |
| Engineer |
| Fitness Center (Re:Charge) |
| Front Desk (Check-in) |
| GM Office |
| Housekeeping (Re:Fresh) |
| Ice |
| Indoor Pool (Splash) |
| Janitor |
| Laundry |
| Linen |
| Lobby (Re:Mix) |
| Pool (Splash) |
| Luggage |
| Mechanical |
| Meeting (Tactic) |
| Pool Equipment Room |
| Pool Shower |
| Pool Storage |
| Food Prep |
| Public Corridor |
| Public Restroom - Men's (w/c) |
| Exit |

| |
|---|
| Public Restroom - Women's (w/c) |
| Snack Bar (Re:Fuel) |
| Stair |
| Storage |
| Vestibule |
| Work Area |
| Data Center |
| Food Prep Storage |
| W XYZ Storage |
| Backyard |
| In Touch |

Issue Date: 28 JUL 2017

Revision Date: 29 JAN 2018

| | |
|---|---|
| Item Name | FLOOR BOX |
| Description: | Wiremold Single & Dual-Service Round Floor Boxes |
| Manufacturer: | Legrand |
| Model #/Color: | 895SPAL/Brushed Alum. cover plate (Lobby)<br>896PCK - Single outlet + 2USB/Black polycarbonate communication or power cover plate black |
| Lead Time: | To be verified |
| Warranty: | All materials, information, products and services are provided 'as is' with no warranties or guarantees whatsoever. |

## SPECIAL INSTRUCTIONS

MANUFACTURER

Legrand (877) 295-3472

Nancy Snyder (978) 807.0515 nancy.snyder@legrand.us

ALTERNATE MANUFACTURER 1

ALTERNATE MANUFACTURER 2

ALTERNATE MANUFACTURER 3

AREAS

Public Space

Fitness Center (Re:Charge)

Lobby (Re:Mix)

Issue Date: 14 FEB 2019

Revision Date:

| | |
|---|---|
| Item Name | Recessed Power Grommet |
| Description: | Recessed Power Grommet - 1 Power/Dual Charging USB |
| Manufacturer: | Doug Mockett |
| Model #: | PCS100 |
| Color: | Black |
| Lead Time: | TBD |
| Warranty: | TBD |

## SPECIAL INSTRUCTIONS

MANUFACTURER

Doug Mockett 800-523-1269

ALTERNATE MANUFACTURER 1

ALTERNATE MANUFACTURER 2

ALTERNATE MANUFACTURER 3

AREAS

Public Space

Meeting (Tactic)

Issue Date: 14 FEB 2019

Revision Date:

| | |
|---|---|
| Item Name | Faceplate Cover Floor Outlet |
| Description: | 2 Hour UL Fire Rates 4" Round Poke Thru Core Drill Flush Floor Box |
| Manufacturer: | Floor Box Outlet |
| Model #: | MOI-DP1COMM4-SS-HC |
| Color: | Stainless Steel |
| Lead Time: | TBD |
| Warranty: | 1 Year |

## SPECIAL INSTRUCTIONS

MANUFACTURER

Floor Box Outlet 888-385-8540

ALTERNATE MANUFACTURER 1

ALTERNATE MANUFACTURER 2

ALTERNATE MANUFACTURER 3

AREAS

Public Space

Meeting (Tactic)

Issue Date: 14 FEB 2019

Revision Date:

| | |
|---|---|
| Item Name | Floor Box |
| Description: | Tactic Meeting Room Floor Box |
| Manufacturer: | Legrand |
| Model #: | Evolution 6" Poke-Thru Device |
| Color: | |
| Lead Time: | |
| Warranty: | |

## SPECIAL INSTRUCTIONS

MANUFACTURER

Legrand (877) 295-3472

Nancy Snyder (978) 807.0515 nancy.snyder@legrand.us

ALTERNATE MANUFACTURER 1

ALTERNATE MANUFACTURER 2

ALTERNATE MANUFACTURER 3

AREAS

Public Space

Meeting (Tactic)

Issue Date: 14 FEB 2019

Revision Date:

| | |
|---|---|
| Item Name | Wall Outlet |
| Description: | Tamper resistant pop-out outlet, 2-gang with USB |
| Manufacturer: | Legrand |
| Model #: | Pop-out outlet: ARPTR152GW2ALOFT;<br>USB Outlet: ARUSBW4;<br>2-Gang Wall Plate: AWP1G2NK4 |
| Color: | Pop-out outlet and USB: black; 2-Gang Wall Plate: Black |
| Lead Time: | TBD |
| Warranty: | All materials, information, products and services are provided 'as is' with no warranties or guarantees whatsoever. |

## SPECIAL INSTRUCTIONS

MANUFACTURER

Legrand (877) 295-3472

Nancy Snyder (978) 807.0515 nancy.snyder@legrand.us

ALTERNATE MANUFACTURER 1

ALTERNATE MANUFACTURER 2

ALTERNATE MANUFACTURER 3

AREAS

Public Space

Meeting (Tactic)

Residential Appliances

Issue Date: 14 FEB 2019

Revision Date:

| | |
|---|---|
| Item Name | Full Size Refrigerator |
| Description: | Top freezer refrigerator |
| Manufacturer: | GE Appliances |
| Model #: | GPS12FSHSS |
| Dimensions: | 24" W x 28-5/8" D x 59-7/8" H approx. |
| Finish: | Stainless Steel |
| Lead Time: | Standard lead times are 1-4 weeks upon receipt of Purchase Order and Deposit. Lead times are typical and should be verified by the manufacturer. |
| Warranty: | 1 year warranty |
| Energy Star: | Yes |
| Electrical Connection: | Cord and plug connected |

## SPECIAL INSTRUCTIONS

MANUFACTURER

GE Appliances 1-888-231-2548

Benjamin Weingarten 949-653-5900 ben.weingarten@geappliances.com

ALTERNATE MANUFACTURER 1

ALTERNATE MANUFACTURER 2

ALTERNATE MANUFACTURER 3

AREAS

Public Space

Break Room

Issue Date: 14 FEB 2019

Revision Date:

| | |
|---|---|
| Item Name | Microwave |
| Description: | Microwave Oven |
| Manufacturer: | GE Appliances |
| Model #: | JEM3072SHSS |
| Dimensions: | 17-5/16" W x 12-3/4" D x 10-3/4" H approximate |
| Finish: | Stainless Steel |
| Lead Time: | Standard lead times are 1-4 weeks upon receipt of Purchase Order and Deposit. Lead times are typical and should be verified by the manufacturer. |
| Warranty: | 1 year warranty |
| Energy Star: | Yes |
| Electrical Connection: | Cord and plug connected |

## SPECIAL INSTRUCTIONS

MANUFACTURER

GE Appliances 1-888-231-2548

Benjamin Weingarten 949-653-5900 ben.weingarten@geappliances.com

ALTERNATE MANUFACTURER 1

ALTERNATE MANUFACTURER 2

ALTERNATE MANUFACTURER 3

AREAS

Public Space

Break Room

Concrete

Issue Date: 28 JUL 2017

Revision Date: 29 JAN 2018

| | |
|---|---|
| Item Name | Polished Concrete |
| Description: | Polished concrete at lobby floors |
| Manufacturer: | Advanced Floor Products |
| Product: | RetroPlate 99 |
| Dimensions: | Verify in field (VIF) |
| Finish: | Natural matte level #01 |
| Color: | |
| Abrasion: | ASTM C779 |
| Hardness: | ASTM C805 |
| Coefficient Friction: | ASTM-1028<br>All levels of finish to exceed OSHA and ADA recommendations; also for wet and dry surfaces |
| Composition: | Non flammable, water-based, non toxic.<br>Meets USDA and VOC compliance. |
| Lead Time: | TBD |
| Warranty: | 10 year product and labor warranty |
| Eco Feature(s) *as per manufacturer: | LEED Certified |

## SPECIAL INSTRUCTIONS

MANUFACTURER

Advanced Floor Products
c/o RetroPlate
System/Floored, LLC. (801) 812-3420

Jason Bye (888) 736-7550 jbye@rochester.rr.com

ALTERNATE MANUFACTURER 1

ALTERNATE MANUFACTURER 2

ALTERNATE MANUFACTURER 3

AREAS

Public Space

Lobby (Re:Mix)

Stair

W XYZ Storage

Issue Date: 28 JUL 2017

Revision Date: 14 FEB 2019

| | |
|---|---|
| Item Name | Concrete at Interior/Exterior Pool Deck |
| Description: | Acrylic Spray Texture Coating |
| Product: | Sundek SunSplash/Classic Texture Copolymer System |
| Manufacturer: | Sundeck Products Inc. |
| Dimensions: | Verify in field (VIF) |
| Finish: | Clear Top coat protective sealing material to be matte finish acrylic with slip-resistant aluminum oxide broadcast. |
| Color: | Aloft Grey (50% Tweed Grey/50% Smoke Grey) with gradient technique/radial design as shown (consistent fade from 100% at center to 5% at ends) |
| Abrasion: | ASTM D-1242 |
| Hardness: | ASTM D1242 - Standard Test Methods for Abrasion Resistance Abrasion. 0328 in. = 3000 psi Concrete |
| Coefficient Friction: | ASTM C-1028<br>All levels of finish to exceed OSHA and ADA recommendations; also for wet and dry surfaces |
| Composition: | Copolymer Modified Portland cement, fine aggregates, vinyl acetate emulsion, and water based acrylic. |
| Lead Time: | TBD |
| Warranty: | Standard for installation and workmanship is 2 years |
| Eco Feature(s) *as per manufacturer: | Quantified Solar Reflective Index Values, Cooler than typical concrete surfaces for your comfort • Non-porous applications for ease of maintenance and care with general use Eco friendly cleaners. Water based Low VOC meets all US Standards. |

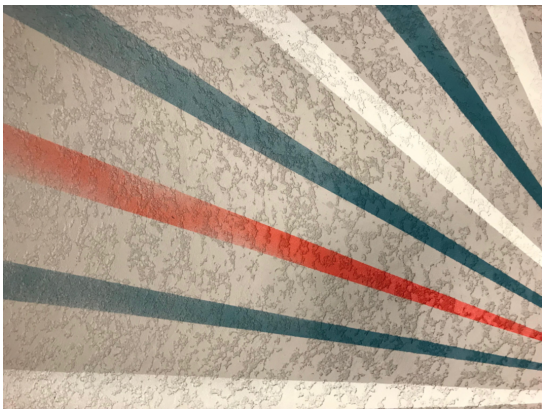

## SPECIAL INSTRUCTIONS

Issue Date: 28 JUL 2017

Revision Date:

| | |
|---|---|
| Item Name | Sealed Concrete |
| Product: | To be verified by General Contractor |
| Manufacturer: | To be verified by General Contractor |
| Dimensions: | |
| Finish: | |
| Color: | |
| Abrasion: | ASTM C779 |
| Hardness: | ASTM C805 |
| Coefficient Friction: | ASTM 1028<br>All levels of finish to exceed OSHA and ADA recommendations; also for wet and dry surfaces |
| Composition: | Non flammable, water-based, non toxic. Meets USDA and VOC compliance. |
| Lead Time: | |
| Warranty: | |
| Eco Feature(s) *as per manufacturer: | |

## SPECIAL INSTRUCTIONS

MANUFACTURER

TO BID

Customer Service

ALTERNATE MANUFACTURER 1

ALTERNATE MANUFACTURER 2

ALTERNATE MANUFACTURER 3

AREAS

Public Space

BOH Corridor

Chute

Electrical

Engineer

Janitor

Luggage

Mechanical

Pool Equipment Room

Issue Date: 14 FEB 2019

Revision Date:

| | |
|---|---|
| Item Name | Concrete Floor |
| Description: | Two Component Low VOC Acrylic Urethane hybrid |
| Product: | SunGuard HT250 VOC |
| Manufacturer: | Sundeck Products USA, inc. |
| Dimensions: | Verify in Field |
| Finish: | Matte Finish, Tintable |
| Color: | TBD |
| Abrasion: | Abrasion: Tabor (1000gm. Load 1000cycles, CS17 wheel) 69 mg loss<br>Impact Resistance: (ASTM D-2794) passes 3/8 inch-pounds direct impact |
| Hardness: | (Konig) 127 |
| Composition: | Two Component, Low VOC formulation of acrylic emulsion crosslinked with aliphatic urethane |
| COF: | 0.35-0.42 Wet DCOF |
| Lead Time: | TBD |
| Warranty: | 2 year Product and Installation |
| Eco Feature(s) *as per manufacturer: | Meets SCAQMD VOC requirements |

## SPECIAL INSTRUCTIONS

MANUFACTURER

Sundeck Products Inc. 877-478-6335

Bob Miller 1.410.610.9401 rmiller@sundek.com

ALTERNATE MANUFACTURER 1

ALTERNATE MANUFACTURER 2

ALTERNATE MANUFACTURER 3

AREAS

Public Space

Meeting (Tactic)

Issue Date: 14 FEB 2019

Revision Date:

| | |
|---|---|
| Item Name | Concrete Floor |
| Description: | Acrylic Spray Texture Coating |
| Product: | Sundek SunSplash/Classic Texture Copolymer System |
| Manufacturer: | Sundek Products Inc. |
| Dimensions: | Verify in field (VIF) |
| Finish: | Clear Top coat protective sealing material to be matte finish acrylic with slip-resistant aluminum oxide broadcast. |
| Color: | Aloft Grey (50% Tweed Grey/50% Smoke Grey) |
| Abrasion: | ASTM D-1242 |
| Hardness: | ASTM D1242 – Standard Test Methods for Abrasion Resistance Abrasion. 0328 in. = 3000 psi Concrete |
| Coefficient Friction: | ASTM C-1028<br>All levels of finish to exceed OSHA and ADA recommendations; also for wet and dry surfaces |
| Composition: | Copolymer Modified Portland cement, fine aggregates, vinyl acetate emulsion, and water based acrylic. |
| Lead Time: | TBD |
| Warranty: | Standard for installation and workmanship is 2 years |
| Eco Feature(s) *as per manufacturer: | Quantified Solar Reflective Index Values, Cooler than typical concrete surfaces for your comfort • Non-porous applications for ease of maintenance and care with general use Eco friendly cleaners. Water based Low VOC meets all US Standards. |

## SPECIAL INSTRUCTIONS

# CO-006

Concrete

MANUFACTURER

Sundek Products Inc. 877-478-6335

Bob Miller 1.410.610.9401 rmiller@sundek.com

ALTERNATE MANUFACTURER 1

ALTERNATE MANUFACTURER 2

ALTERNATE MANUFACTURER 3

AREAS

Public Space

Pool (Splash) Restroom (w/c)

# Concrete
Cutsheets

| CO-001 | CO-003 |
|---|---|
| Revision Date: | Revision Date: |

# RETRO PLATE®

## Product Description & Benefits

RetroPlate 99 is a chemically reactive liquid which **enhances concrete density and hardness**, allowing concrete sufaces to be polished to a high, marble like sheen. In conjunction with diamond tools and machinery, and the process of grinding and polishing concrete, it is known as the RetroPlate Concrete Polishing System.

The RetroPlate System began as a way of removing old, worn out coatings. But owners, facility managers and architects soon realized its potential for new concrete floors and quickly began to specify it. The results were durable, beautifully polished floors void of typical coating pitfalls.

By chemically treating concrete surfaces and polishing the bare concrete, the RetroPlate System creates a **highly abrasion resistant**, **dustproofed**, **polished** and **aesthetically pleasing floor** that is very **easy to clean and maintain**.

The RetroPlate System can be used in conjunction with acid staining, shake-on hardeners, integral color and cementitious terrazzo. Colored aggregate, recycled glass and other decorative material can be embedded into the concrete surface, later to be exposed during the grinding process.

A desire to help owners, facility managers and architects find a permanent solution to floor coating problems created the RetroPlate Concrete Polishing System, a state-of-the-art flooring alternative that is **limitless in its design potential** and **unmatched in durability and performance**.

### AGGREGATE EXPOSURE CHARTS

| | |
|---|---|
| **Cream** | Little aggregate exposure |
| **Fine (Salt & Pepper)** | Fine aggregate exposure |
| **Medium** | Medium aggregate exposure |
| **Large** | Large aggregate exposure |

### FINISHED GLOSS CHART

| | |
|---|---|
| **Level 1** | **Flat** (Below 100 grit)<br>*None to very slight diffused reflection* |
| **Level 2** | **Satin** (100 - 400 grit)<br>*Matte; with or without slight diffused reflection* |
| **Level 3** | **Semi-Polished** (800 grit +)<br>*Objects being reflected are not quite sharp and crisp but can be easily identified* |
| **Level 4** | **Highly-Polished** (800 grit +)<br>*Objects being reflected are sharp and crisp as would be seen in a mirror-like reflection* |

## Technical Data +

| | |
|---|---|
| ***Coverage Area:*** | 200 ft²/gal (5 m²/L)<br>*Depends on porosity and state of concrete* |
| ***Form & Odor:*** | Clear, colorless liquid; odorless |
| ***pH:*** | 11.3 - 11.6 |
| ***Thinners:*** | None<br>*Use as packaged* |
| ***Duration of Effectiveness:*** | Permanent |
| ***Internal Comp:*** | Non-flammable, water-based, non-toxic<br>*Meets USDA and VOC compliance* |
| ***Storage Life:*** | Indefinite<br>*Agitate before use if product is more than 1 year old.* |
| ***Packaging:*** | 1 gal (3.79 L) Samples<br>5 gal (19 L) Pails<br>55 gal (208 L) Drums |

### APPLICABLE STANDARDS

**ABRASION** - ASTM C779 - Up to 400% increase in abrasion resistance, depending on concrete quality.

**HARDNESS** - ASTM C805 - 21% increase in impact resistance.

**WEATHERING** - ASTM G23-81 - No adverse effect to ultraviolet light or water spray.

**LIGHT REFLECTIVITY** - 30% increase in reflectivity.

**SKIDABILITY STATIC** - Coefficient of Friction ASTM 1028 - Independent testing has shown that RetroPlate can exceed OSHA and ADA recommendations for wet and dry hard surfaces.

## Considerations

RetroPlate 99 provides a hardened, durable, and dense concrete surface when applied after smoothing and honing of the rough, pitted concrete or removal of soft, carbonated concrete surfaces prior to Level 1, 2, 3 or 4 finishing. Over time, RetroPlate 99 increases in penetration resistance.

RetroPlate 99 must be applied to structurally sound concrete surfaces. Soft, carbonated or structurally unsound concrete surfaces must be removed so that RetroPlate 99 can react with a stable substrate. All restrictive coatings must be removed to allow RetroPlate 99 to fully penetrate the concrete surface.

RetroPlate 99 should not be applied when freezing conditions may occur.



Curecrete Distribution, Inc. 1203 Spring Creek Place, Springville, UT, USA phone 801.489.5663 free 800.998.5664 fax 801.489.3307 retroplatesystem.com

## Availability & Installation

RetroPlate 99 is installed by a network of factory approved applicators as part of the RetroPlate Concrete Polishing System. Contact your Advanced Floor Products representative for a list of approved applicators in your area by calling toll free **888.942.3144** or **801.812.3420**.

## Technical Info & Safety Data Sheet (SDS)

Contact Advanced Floor Products at **801.812.3420**, toll free at **888.942.3144**, or by email at **technical@retroplatesystem.com**.

For emergencies call **800.633.8253 or 801.629.0667.**

Please scan the code for this product's Safety Data Sheet (SDS).

## Industries Served

RetroPlate has become a hallmark of excellence, durability and beauty in a number of industries and facilities including, but not limited to:

- Arenas
- Automotive
- Building Exteriors
- Commercial
- Government
- Medical
- Museums
- Office
- Residential
- Restaurants
- Retail
- Schools
- Sports & Recreation
- Transportation
- Universities

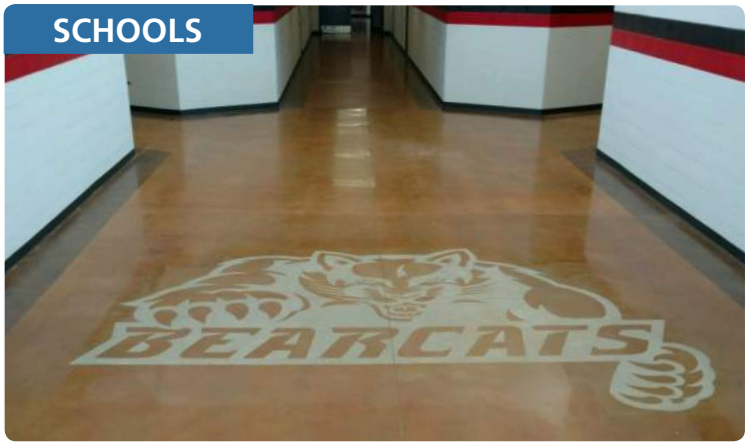

***This specification is provided by Advanced Floor Products as a service and is intended to be used as a guideline for preparing the appropriate project specific specification sections. Every heading may not be needed. Delete headings not used and renumber remaining used headings to be numerically correct.***

# PART 1 GENERAL

1. 1 SUMMARY

A. This section includes the following.
1. Applying Sealer and Hardener, and polishing concrete to specified finish level.

B. Related Work:
1. Section 03300 Cast-In-Place Concrete
2. Section 09639 Concrete Hardening/Sealing

1.2 REFERENCES

A. American Society for Testing and Materials:
1. ASTM-C779, Standard Test Method for Abrasion Resistance of Horizontal Concrete Surfaces
2. ASTM G23-81, Ultraviolet Light & Water Spray
3. ASTM C805, Impact Strength

B. American Concrete Institute
1. ACI 302. 1R-89, Guide for Concrete Floor and Slab Construction

C. Other Test:
1. Reflectivity

1.3 SUBMITTALS

A. Comply with pertinent provisions of Section 01600- Product Requirements.
1. Provide submittal information within 35 calendar days after the contractor has received the owner's notice to proceed.

B . Product data:
1. Submit special concrete finishes manufacturer's specifications and test data.
2. Submit special concrete finishes describing product to be provided, giving manufacturer’s name and product name for the specified material proposed to be provided under this section.

3. Submit special concrete finishes manufacturer's recommended installation procedures; which when approved by the Architect, will become the basis for accepting or rejecting actual installation procedures used on the work.
4. Submit special concrete finishes technical data sheet giving descriptive data, curing time, and application requirements.
5. Submit special concrete finishes manufacturer's Material Safety Data Sheet (MSDS) and other safety requirements.
6. Follow all special concrete finishes published manufacturer's installation instructions.

C. Test Reports:
1. Provide certified test reports, prepared by an independent testing laboratory, confirming compliance with specified performance criteria.

1.4 QUALITY ASSURANCE

A. Installer Qualifications:
1. Use an experienced installer and adequate number of skilled workmen who are thoroughly trained and experienced in the necessary craft.
2. The special concrete finish manufacturer shall certify applicator.
3. Applicator shall be familiar with the specified requirements and the methods needed for proper performance of work of this section.

B. Manufacturer's Certification:
1. Provide letter of certification from concrete finish manufacturer stating that installer is certified applicator of special concrete finishes, and is familiar with proper procedures and installation requirements required by the manufacturer.

C. Mock-ups:
1. Apply mock-ups of each type finish, to demonstrate typical joints, surface finish, color variation (if any), and standard of workmanship.
   a. Build mock-ups approximately 50 square feet in the location indicated or if not indicated, as directed by the Architect or Owner Representative.
   b. Notify Architect or Owner Representative seven days in advance of dates and times when mock-ups will be constructed.
   c. Obtain from the Architect or Owner Representative approval of mock-ups before starting construction.
   d. If the Architect or Owner Representative determines that mock-ups do not meet requirements, demolish and remove them from the site and cast others until mock-ups are approved.
   e. Maintain mock-ups during construction in an undisturbed condition as a standard for judging the completed work.

f. Approved mock-ups may become part of the completed work if undisturbed at time of substantial completion.

D. Protection
1. No satisfactory chemical or cleaning procedure is available to remove petroleum stains from the concrete surface. Prevention is therefore essential.
   a. All hydraulic powered equipment must be diapered to avoid staining of the concrete.
   b. No trade will park vehicles on the inside slab. If necessary to complete their scope of work, drop cloths will be placed under vehicles at all times.
   c. No pipe cutting machine will be used on the inside floor slab.
   d. Steel will not be placed on interior slab to avoid rust staining.
   e. Acids and acidic detergents will not come into contact with slab.
   f. All trades informed that the slab must be protected at all times.

E. Pre-Installation Conference:
1. Conduct conference at project site to comply with requirements in Division 1 Section " Project Management and Coordination"

1.5 DELIVERY, STORAGE AND HANDLING

A. Deliver materials in original containers, with seal's unbroken, bearing manufacturer labels indicating brand name and directions for storage.

B. Dispense special concrete finish material from factory numbered and sealed containers. Maintain record of container numbers.

1.6 PROJECT CONDITIONS

A. Environmental limitations:
1. Comply with manufacturers written instructions for substrate temperature and moisture content, ambient temperature and humidity, ventilation, and other conditions affecting topping performance.
   a. Concrete Floor Flatness rating recommended at least 40, where possible.
   b. Concrete Floor Levelness rating recommended at least 30, where possible.
   c. Concrete must be cured a minimum of 45 days or as directed by the manufacturer before application of Retro Plate can begin.
   d. Application of Retro-Plate shall take place 10 days prior to installation of equipment and substantial completion, thus providing a complete, uninhibited concrete slab for application.

B. Close areas to traffic during floor application and after application, for time period recommended in writing by manufacturer.

## PART 2 – PRODUCTS

2.1 MATERIALS AND MANUFACTURERS

A. HARDENING/SEALING AGENT
1. Retro-Plate 99, manufactured by Advanced Floor Products, Inc., P.O. Box 50533, Provo, Utah 84605, 801-812-3420.
   a. Performance Criteria:
      i. Abrasion Resistance: ASTM C779 – Up to 400% increase in abrasion resistance.
      ii. Impact Strength: ASTM C805 – Up to 21% increase impact strength.
      iii. Ultra Violet Light and Water Spray: ASTM G23-81 – No adverse effect to ultra violet and water spray.
      iv. Reflectivity: Up to 30% increase in reflectivity.
2. Certified Applicators
3. Manufacturer's Regional Representative

2.2 RELATED MATERIALS

A. Neutralizing Agent:
1. Tri-sodium Phosphate

B. Water:
1. Potable

## PART 3- EXECUTION

3.1 SURFACE CONDITIONS:

A. Examine substrate, with installer present, for conditions affecting performance of finish. Correct conditions detrimental to timely and proper work. Do not proceed until unsatisfactory conditions are corrected.

B. Verify that base slab meet finish and surface profile requirements in Division 3 Section "Cast-In-Place Concrete," and Project Conditions above.

C. Prior to application, verify that floor surfaces are free of construction latents.

3.2 APPLICATION

A. Start any of the floor finish applications in presence of manufacturer's technical representative.

B. Sealing, Hardening and Polishing of Concrete Surface
1. Concrete must be in place a minimum of 45 days or as directed by the manufacturer before application can begin.
2. Application is to take place at least 10 days prior to racking and other in-store accessory installation, thus providing a complete, uninhibited concrete slab for application
3. Only a certified applicator shall apply Retro-Plate 99. Applicable procedures must be followed as recommended by the product manufacturer and as required to match approved test sample.
4. Achieve waterproofing, hardening, dust-proofing, and abrasion resistance of the surface without changing the natural appearance of the concrete, except for the sheen.
5. Polish to required sheen level.

3.3 WORKMANSHIP AND CLEANING:

A. The premises shall be kept clean and free of debris at all times.

B. Remove spatter from adjoining surfaces, as necessary.

C. Repair damages to surface caused by cleaning operations.

D. Remove debris from jobsite
1. Dispose of materials in separate, closed containers in accordance with local regulations.

3.4 PROTECTION:

A. Protect finished work until fully cured in accordance with manufacturer's recommendations.

**END OF SPECIFICATION**
**SECTION 033600**

12/3/2018

Sundek Exterior Decorative Concrete Overlay System

Product Specification Prepared Exclusively for Marriott Corporation ALOFT Hotels

RE: Pool Deck and Outdoor Experience Area, Decorative Concrete Application

**Product:** Sundek SunSpalsh/Classic Texture Copolymer System. Sundek product shall be installed directly on fully cured cast in place concrete with CSP level 2-3 surface profile. Color and pattern to match of Marriott "ALOFT" finish color and design. Clear Top coat protective sealing material to be matte finish urethane with slip-resistant aluminum oxide broadcast. Installation shall be by approved Sundek products applicator installed in accordance to manufactures specifications. Acceptable product manufacture; Sundek Products Inc., 805 Ave H East, Arlington Texas 76011 USA www.sundek.com.

ALOFT Hotels
Pool Deck and Outdoor Experience Area

Suggested Maintenance:

Sundek Systems:

Monthly regular cleaning is recommended by use of a citrus based cleaner and light pressure washing (under 2000 psi) is the most effective method. Apply cleaner by light scrub with a stiff bristled brush allow to penetrate dirt then rinse with hose or pressure washer. In the event of oils, substitute citrus based cleaner with a de-greaser type cleaner. Always apply solution in a wet state and keep fluid during cleaning. After 24 months of service it is suggested to apply a light application of a clear water based top-coat sealer. Sundek offers a maintenance program these recommended services.

Caution should be taken to avoid deicer chemicals containing calcium chloride. In the event corrosive chemicals are spilled on surface please neutralize with TSP, soda ash or baking soda, scrub lightly and rinse immediately with clean water.

In the event other cleaning or repair are required please contact Sundek products USA 877.476.6335 for information.

CO-005
Revision Date:

TECH-APP SHEET

SUNDEK®
*You stand on it. We stand behind it.®*

# SunClear ♦ HT Clear
## (Solvent Base)
### POLYURETHANE

## PRODUCT DESCRIPTION AND USE

HT Clear is a two component, high solids aliphatic polyurethane. This product offers a remarkable combination of performance properties not found in other polymer coatings. HT Clear produces protective films which are hard, flexible and very impact resistant. These coatings feature high abrasion and scratch resistance, exterior durability, easy soil release and excellent resistance to a broad range of chemicals. A special accelerator is available when rapid project turnaround is required. HT Clear has been designed as a high performance top coat in various protective coating and seamless flooring applications. It provides maximum cleanability and stain resistance when used as a finish coat in color chip flooring or epoxy-quartz flooring. This coating is ideally suited for clean-room floors, automotive repair facilities, aircraft hangars and other high wear areas requiring resistance to fuels and chemicals. When used as a finish coat in wall coating systems, anti-graffiti properties are greatly enhanced.

**Chemical Composition**
Saturated polyester cross linked with aliphatic polyisocyanate.

**Colors**
Clear and 16 standard colors. available in high gloss or satin.

**Limitations**
- Do not use on unprimed substrate.
- Use of satin material requires the addition of accelerator during mixing.

## TECHNICAL DATA

**Physical Properties**

| | |
|---|---|
| Mixing Ratio, by Volume | 2-1 |
| Solids Content, by Weight (Pigmented) | 73.5% |
| Solids Content, by Volume (Pigmented) | 62.5% |
| Solids Content, by Weight (Clear) | 63.5% |
| Solids Content, by Volume (Clear) | 58.5% |
| V.O.C., (Pigmented) | 420 grams/liter |
| Viscosity, cps (77 degrees) | 500 average |

Pot Life (77 degrees, 1 quart mass) .....2 hours
Pot Life (95 degrees, 1 quart mass) ..... 1 hour
Pot Life is reduced by increasing temperature and/or mass

Dry Times (77 degrees)
Dry to Touch ..... 4-6 hours
Recoat ..... 10-12 hours
Light Traffic.....24 hours
Full Cure ..... 7 days
Higher temperatures will shorten cure time and lower temperatures will lengthen cure time.

**Performance Properties**
Gloss (60 degrees)..... 90-95
Gloss (satin material, 60 degrees)..... 50-60
Hardness (Sward)..... 30
Tabor Abrasion (1000 gm. load 1000 cycles, CS 17 wheel) ..... 34 mg. loss
Flexibility (ASTM D-222)..... passes 1/8 inch
Impact Resistance (ASTM D-2794) ..passes 160 inch-pound direct and reverse

## CHEMICAL AND STAIN RESISTANCE (ASTM D-1308 24 HOUR IMMERSION)

Urine ..... no affect
Blood..... no affect
Whiskey ..... no affect
Black Ink..... no affect
Brake Fluid..... no affect
Gasoline ..... no affect
Skydrol B-4 ..... no affect
Hydraulic Fluid #83282 ..... no affect
Mineral Spirits ..... no affect
Xylene..... no affect
MEK..... film softened
50% Sodium Hydroxide..... no affect
25% Hydrochloric Acid ..... no affect
25% Sulphuric Acid..... no affect
25% Acetic Acid ..... no affect
25% Nitric Acid ..... film blistered

## GENERAL INFORMATION

### Moisture Vapor Emissions/Alkalinity Precautions

All interior concrete floors not poured over an effective moisture vapor retarder are subject to possible moisture vapor transmission and related high levels of alkalinity that may lead to blistering and failure of the coating system. It is the coating applicator's responsibility to conduct calcium chloride and relative humidity probe testing to determine if excessive levels of vapor emissions or alkalinity are present before applying any coatings. These test kits are available from Sundeck Products USA, Inc.. Sundeck Products USA, Inc. and its sales agents will not be responsible for coating failures due to undetected moisture vapor emissions or related high levels of alkalinity.

**Surface Preparation**
HT Clear is intended to be applied over primed or previously coated surfaces. Do not apply directly to concrete. Surface must be absolutely clean, dry and free from all dirt, wax, oil, chalk, incompatible paint or detergent film. Fully cured, previously coated surfaces must be cleaned and sanded lightly with 80-100 grit sandpaper or otherwise mechanically abraded before recoating. If multiple coats of High Traffic HT are applied, apply additional coats as soon as possible. If more than 24 hours has elapsed or the coating cannot be indented with a fingernail, lightly sand surface to insure intercoat adhesion.

**Mixing Instructions**
Mix only that amount of material that can be used in a 2 hour period at 77°F. Higher temperatures and the addition of accelerator will reduce work time. In hot weather, mix smaller batches. If using the pigmented system, premix part A well before adding part B. Combining ratio is 2 part A to 1 part B. **Proportion the amounts carefully and mix for two full minutes using a slow speed drill, scraping the bottom and sides of the mixing container.** Material is normally applied as received, but may be thinned with up to 15% MEK. Always thin the satin material to achieve a low application viscosity. Avoid contamination with moisture. Reseal partially used containers completely after use.

**Application Recommendations**
HT Clear may be applied by brush, roller or airless spray. Apply at 275-350 sq. ft. per gallon with 3/8" or 1/2" nap roller as a finish coat over primed concrete. May be applied up to 200 sq. ft. per gallon as a fill coat in aggregate-filled flooring systems using a rubber squeegee and back rolling with a 3/8" nap roller. If using the satin version of this material, it is very important to achieve a uniform application rate of 300-350 sq. ft. per gallon. Heavier films will be glossier, thinner applications will be flatter.

**Handling Precautions**
Material is combustible. Extinguish all flames, pilot lights and electric motors until all vapors are gone and the coating is hard. The vapor is harmful. Use only with adequate ventilation/or appropriate cartridge-type respirator. Avoid contact with skin; wear protective gloves. Read Material Safety Data Sheet before using.

**Slip and Fall Precautions**
OSHA and the American Disabilities Act (ADA) have now set enforceable standards for slip-resistance on pedestrian surfaces. The current coefficient of friction required by ADA is .6 on level surfaces and .8 on ramps. Sundeck Products USA, Inc. recommends the use of angular slip-resistant aggregate in all coatings or flooring systems that may be exposed to wet, oily or greasy conditions. It is the contractor and end users' responsibility to provide a flooring system that meets current safety standards. Sundeck Products USA, Inc. or its sales agents will not be responsible for injury incurred in a slip and fall accident.

WARRANTY INFORMATION
Sundeck Products USA, Inc. guarantees that this product is free from manufacturing defects and complies with our published specifications. In the event that the buyer proves that the goods received do not conform to these specifications or were defectively manufactured, the buyer's remedies shall be limited to either the return of the goods and repayment of the purchase price or replacement of the defective material at the option of the seller. SUNDECK PRODUCTS USA, INC. MAKES NO OTHER WARRANTY, EXPRESSED OR IMPLIED, AND ALL WARRANTIES OF MERCHANTABILITY AND FITNESS FOR A PARTICULAR PURPOSE ARE HEREBY DISCLAIMED. Sundeck Products USA, Inc. shall not be liable for damages caused by application of its products over concrete with excessive moisture vapor transmission or alkalinity. Sundeck Products USA, Inc. shall not be liable for any injury incurred in a slip and fall accident. Manufacturer or seller shall not be liable for prospective profits or consequential damages resulting from the use of this product.

Entrance Mat

# EM-001

Revision 4

Entrance Mat

Issue Date: 28 JUL 2017

Revision Date: 14 FEB 2019

| | |
|---|---|
| Item Name | Entry Vestibule Mat |
| Description: | Entry walk-off mat |
| Manufacturer: | Mats Inc. |
| Product: | Modular diagonal tile |
| Color: | 07 Charcoal |
| Content: | 100% solution-dyed UV stabilized polypropylene fibers |
| Dimensions: | 6-0" x 6-4 3/4" approximately 2.7 sq ft per tile<br>3/8" overall thickness |
| Weight: | 131 oz total weight |
| Backing: | Bitumen |
| Transition: | Schluter zinc divider strip |
| Quality Standards: | Passes ASTM D2859, CPSC FF 1-70<br>ASTM C1028 Wet: 0.63<br>ASTM C1028 Dry: 0.65<br>Passes ASTM E662 |
| Adhesive: | Not applicable |
| Lead Time: | Low-Emitting adhesive With a VOC of 70 g/L or less for multipurpose adhesive |
| Warranty: | 3 year limited warranty |
| Eco Feature(s)* as per manufacturer: | 52.05% recycled (post-consumer)<br>Release-Bond VOC: 0 g/L<br>GreenLabelPlus Certified<br>Designed for semi-permanent installation |

## SPECIAL INSTRUCTIONS

MANUFACTURER

| | | |
|---|---|---|
| MATS INC | 800-628-7462 | |
| Jim Cave | 800-628-7462, x210 | jcave@matsinc.com |

ALTERNATE MANUFACTURER 1

ALTERNATE MANUFACTURER 2

ALTERNATE MANUFACTURER 3

AREAS

Public Space

Vestibule

Fabric Panels

Issue Date: 28 JUL 2017

Revision Date: 14 FEB 2019

| | |
|---|---|
| Item Name | Felt Panel |
| Description: | Felt panels at suspended ceiling soffit |
| Manufacturer: | Design Tex |
| Fabric Pattern: | Wannabe Rib 5622-101 |
| Fabric Color: | Gull |
| Fabric Width: | 63" ( Refer to drawings for cut panel size) |
| Fabric Content: | Polyester |
| Lead Time: | 5 Weeks |
| Warranty: | 10 Year Warranty |

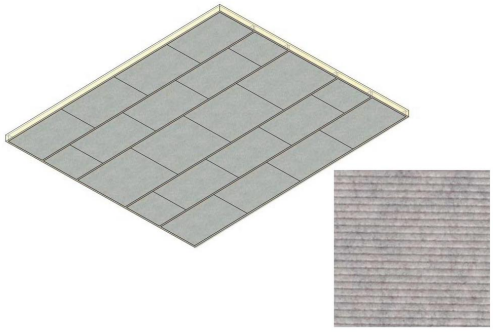

## SPECIAL INSTRUCTIONS

MANUFACTURER

DESIGN TEX

Karyn Schmitt 202.744.4536 kschmitt@designtex.com

ALTERNATE MANUFACTURER 1

ALTERNATE MANUFACTURER 2

ALTERNATE MANUFACTURER 3

AREAS

Public Space

Lobby (Re:Mix)

# FP-001

Revision 4

Fabric Panels

| | | | |
|---|---|---|---|
| Project: | Public Spaces | Issue Date: | 28 JUL 2017 |
| Project #: | ALOFT Hotels G4.0 | Revision Date: | 14 FEB 2019 (4) |

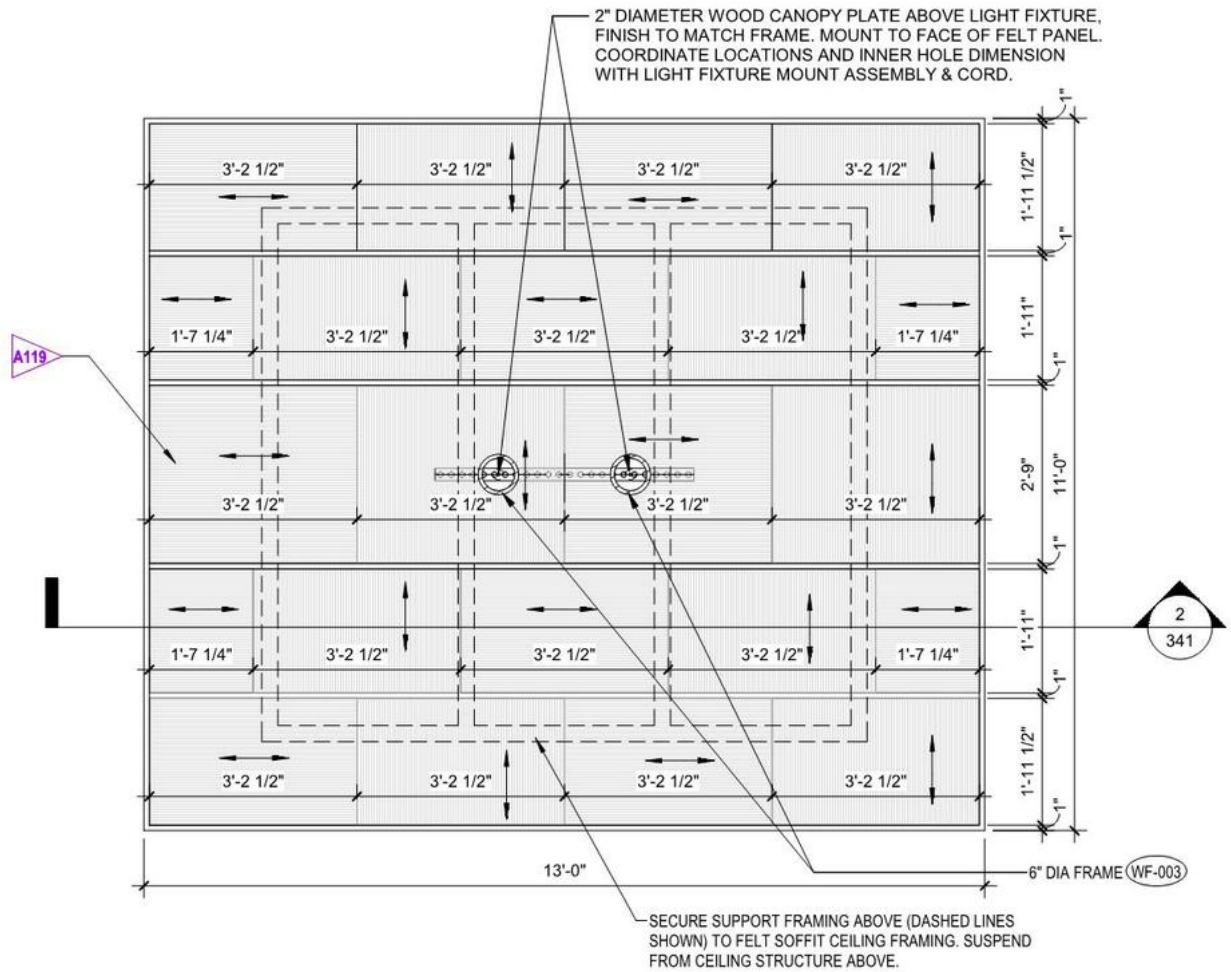

Glass Film

Issue Date: 28 JUL 2017

Revision Date: 29 JAN 2018

| | |
|---|---|
| Item Name | Graphic adhesive film |
| Description: | Pressure sensitive film |
| Manufacturer: | MDC |
| Model #: | MAR711 - Binary Tweed |
| Content: | Digital Print on clear pressure sensitive vinyl film (PSV) with 3M 3645 Luster over-laminate<br><br>MAR709: Guest Laundry entry door - Binary Tweed film<br>MAR710: Guestroom floor corridor window graphic (next to elevators) - Binary Tweed film (optional)<br>MAR711: Elevator window graphic - Binary Tweed film (optional) |
| Dimensions: | 48"W x 30"H (VIF) |
| Graphic: | Graphic artwork files are available. Contact Marriott for details. |
| Site Measurements: | Required - Installer to verify all dimensions and conditions on site prior to ordering. See door and window schedule for locations. |
| Color: | Black on clear film |
| Lead Time: | 3-4 weeks |
| Warranty: | 5 years |

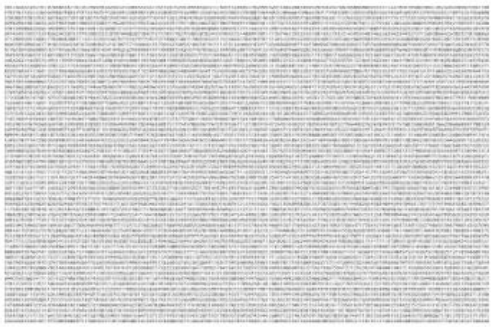

## SPECIAL INSTRUCTIONS

MANUFACTURER

MDC 800-621-4006

Jake Kelly 703-220-1644 JKelly@mdcwall.com

ALTERNATE MANUFACTURER 1

ALTERNATE MANUFACTURER 2

ALTERNATE MANUFACTURER 3

AREAS

Public Space

Clean

Issue Date: 28 JUL 2017

Revision Date: 29 JAN 2018

| | |
|---|---|
| Item Name | Graphic adhesive film |
| Description: | Pressure sensitive film |
| Manufacturer: | MDC |
| Model #: | MAR707 |
| Content: | Digital Print on clear pressure sensitive vinyl film (PSV) with 3M 3645 Luster over-laminate<br><br>MAR707: White film, interior side (75%) opacity |
| Dimensions: | 48"W x 30"H (VIF) |
| Graphic: | Graphic artwork files are available. Contact Marriott for details. |
| Site Measurements: | Required - Installer to verify all dimensions and conditions on site prior to ordering. See door and window schedule for locations. |
| Color: | Black on clear film |
| Lead Time: | 3-4 weeks |
| Warranty: | 5 years |

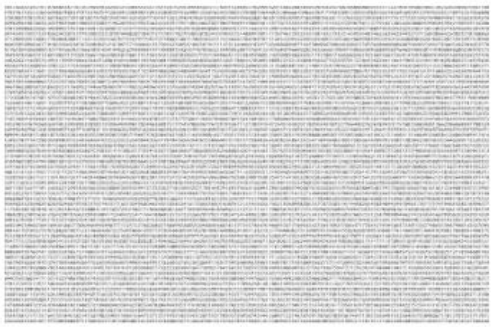

## SPECIAL INSTRUCTIONS

MANUFACTURER

MDC 800-621-4006

Jake Kelly 703-220-1644 JKelly@mdcwall.com

ALTERNATE MANUFACTURER 1

ALTERNATE MANUFACTURER 2

ALTERNATE MANUFACTURER 3

AREAS

Glass

Issue Date: 21 SEP 2017

Revision Date: 14 FEB 2019

| | |
|---|---|
| Item Name | Mirrored Glass |
| Description: | Clear mirror |
| Manufacturer: | Guardian Glass |
| Model Number: | UltraMirror |
| Dimensions: | 1/4" thick<br>Refer to drawings for overall size and layout |
| Edges: | Flat polished on exposed edges, Mirror to Mirror edges where mirrors meet |
| Construction: | Provide electro-deposited silvering in two coats Conforms with ASTM C1036 and CPSC 16 CFR 1201 |
| Glass Type: | Tempered glass mirror |
| Lead Time: | TBD |
| Warranty: | TBD |

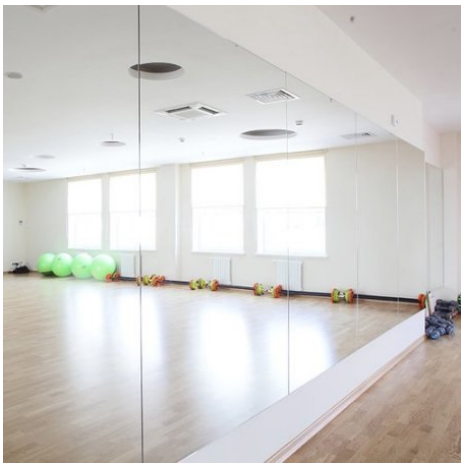

## SPECIAL INSTRUCTIONS

MANUFACTURER

Guardian Glass 248.340.1800

info@guardian.com

ALTERNATE MANUFACTURER 1

ALTERNATE MANUFACTURER 2

ALTERNATE MANUFACTURER 3

AREAS

Public Space

Front Desk (Check-in)

**ALOFT Hotels G4.0-Public Spaces**

**G4.0**

**BUILDING PRODUCT MANUAL**

# GL-002

Glass

Issue Date: 14 FEB 2019

Revision Date:

| | |
|---|---|
| Item Name | Glass |
| Description: | Clear tempered laminated low iron glass |
| Manufacturer: | Guardian Glass |
| Model Number: | UltraClear Float Glass |
| Dimensions: | 1/4" thick<br>Refer to drawings for overall size and layout |
| Construction: | Condition A, Type 1, Class 1, Quality q3<br>Conforms to ASTM C1048, and CPSC 16 CFR 1201 |
| Material Content: | Low Iron |
| Finish Color: | Clear, fully tempered safety glass |
| Lead Time: | |
| Warranty: | |
| Eco-Feature(s) *as per manufacturer: | |
| Notes: | |

## SPECIAL INSTRUCTIONS

MANUFACTURER

Guardian Glass 248.340.1800

info@guardian.com

ALTERNATE MANUFACTURER 1

ALTERNATE MANUFACTURER 2

ALTERNATE MANUFACTURER 3

AREAS

Public Space

Fitness Center (Re:Charge)

Meeting (Tactic)

**ALOFT Hotels G4.0-Public Spaces**

**G4.0**

**BUILDING PRODUCT MANUAL**

# GL-003-ALT1

Glass

Issue Date: 14 FEB 2019

Revision Date:

| | |
|---|---|
| Item Name | Mirrored Glass |
| Description: | Clean Mirror |
| Manufacturer: | Guardian Glass |
| Model Number: | UltraMirror |
| Edges: | Flat polished on exposed edges, Mirror to Mirror edges where mirrors meet |
| Dimensions: | 1/4" thick<br>Refer to drawings for overall size and layout |
| Construction: | Provide electro-deposited silvering in two coats Conforms with ASTM C1036 and CPSC 16 CFR 1201 |
| Finish/Color: | Tempered glass mirror |
| Glass Type: | Custom Colored Laminated Mirror |
| Notes: | To Match Bendheim 15349 |
| Lead Time: | To be Verified |
| Warranty: | Limited warranty for a period of ten years from date of manufacturer. |
| Eco-Featurer(s) *as per manufacturer: | N/A |

## SPECIAL INSTRUCTIONS

MANUFACTURER

Guardian Glass 248.340.1800

info@guardian.com

ALTERNATE MANUFACTURER 1

ALTERNATE MANUFACTURER 2

ALTERNATE MANUFACTURER 3

AREAS

Public Space

Elevators

Fitness Center (Re:Charge)

# GL-003-ALT2

Glass

Issue Date: 14 FEB 2019

Revision Date:

| | |
|---|---|
| Item Name | Mirrored Glass |
| Description: | Clear Mirror |
| Manufacturer: | Guardian Glass |
| Model Number: | UltraMirror |
| Edges: | Flat polished on exposed edges, Mirror to Mirror edges where mirrors meet |
| Dimensions: | 1/4" thick<br>Refer to drawings for overall size and layout |
| Construction: | Provide electro-deposited silvering in two coats Conforms with ASTM C1036 and CPSC 16 CFR 1201 |
| Glass Type: | Tempered glass mirror |
| Finish/Color: | Tempered glass mirror |
| Notes: | To match Bendheim - 1275 |
| Lead Time: | To be Verified |
| Warranty: | Limited warranty for a period of ten years from date of manufacturer. |
| Eco-Feature(s) *as per manufacturer: | N/A |

## SPECIAL INSTRUCTIONS

MANUFACTURER

Guardian Glass 248.340.1800

info@guardian.com

ALTERNATE MANUFACTURER 1

ALTERNATE MANUFACTURER 2

ALTERNATE MANUFACTURER 3

AREAS

Public Space

Elevators

Fitness Center (Re:Charge)

Grout

# GR-003

Grout

Issue Date: 28 JUL 2017

Revision Date:

| | |
|---|---|
| Item Name | Grout |
| Manufacturer: | Laticrete |
| Product Type: | 1500 Sanded |
| Sealer: | Miraseal 511 Porous Plus |
| Color: | 89 - Smoke Grey |
| Grout Joint Width: | 1/16" Minimum - 1/8" Maximum Grout Joint Width |
| Lead Time: | To Be Verified |
| Warranty: | Laticrete warrants that products will be free from manufacturing defects and will not break down or deteriorate under normal usage for a period of (1) year from the date of purchase when installed in accordance with Laticrete specifications. |
| Eco-Feature(s) *as per manufacturer: | GREENGuard Certified |

#89 - Smoke Grey

## SPECIAL INSTRUCTIONS

MANUFACTURER

Laticrete 1.800.243.4788

Kurt Weber 540-847-8453 klweber@laticrete.com

ALTERNATE MANUFACTURER 1

ALTERNATE MANUFACTURER 2

ALTERNATE MANUFACTURER 3

AREAS

Issue Date: 28 JUL 2017

Revision Date:

| | |
|---|---|
| Item Name | Grout |
| Manufacturer: | Mapei |
| Product Type: | Kerapoxy CQ |
| Sealer: | N/A |
| Color: | 47 Charcoal |
| Grout Joint Width: | Joints Between Sheets to Match Joints Between Individual Tile |
| Lead Time: | To Be Verified |
| Warranty: | Mapei warrants that products will be free from manufacturing defects and will not break down or deteriorate under normal usage for a period of (1) year from the date of purchase when installed in accordance with specifications. |
| Eco-Feature(s) *as per manufacturer: | N/A |

47 Charcoal

## SPECIAL INSTRUCTIONS

| MANUFACTURER | AREAS |
|---|---|
| Mapei 1.800.992.6273 | |
| ALTERNATE MANUFACTURER 1 | |
| ALTERNATE MANUFACTURER 2 | |
| ALTERNATE MANUFACTURER 3 | |

Issue Date: 28 JUL 2017

Revision Date:

| | |
|---|---|
| Item Name | Grout |
| Manufacturer: | Laticrete |
| Product Type: | 1500 Sanded |
| Sealer: | Miraseal 511 Porous Plus |
| Color: | 60 - Dusty Grey |
| Grout Joint Width: | 3/8" Grout Joint Width |
| Lead Time: | To Be Verified |
| Warranty: | Laticrete warrants that products will be free from manufacturing defects and will not break down or deteriorate under normal usage for a period of (1) year from the date of purchase when installed in accordance with Laticrete specifications. |
| Eco-Feature(s) *as per manufacturer: | GREENGuard Certified |

#60 - Dusty Grey

## SPECIAL INSTRUCTIONS

MANUFACTURER

Laticrete 1.800.243.4788

Kurt Weber 540-847-8453 klweber@laticrete.com

ALTERNATE MANUFACTURER 1

ALTERNATE MANUFACTURER 2

ALTERNATE MANUFACTURER 3

AREAS

# GR-006

Grout

Issue Date: 28 JUL 2017

Revision Date:

| | |
|---|---|
| Item Name | Grout |
| Manufacturer: | Laticrete |
| Product Type: | 1500 Sanded |
| Sealer: | Miraseal 511 Porous Plus |
| Color: | 18 - Sauterne |
| Grout Joint Width: | 1/16" Minimum - 1/8" Maximum Grout Joint Width |
| Lead Time: | To Be Verified |
| Warranty: | Laticrete warrants that products will be free from manufacturing defects and will not break down or deteriorate under normal usage for a period of (1) year from the date of purchase when installed in accordance with Laticrete specifications. |
| Eco-Feature(s) *as per manufacturer: | GREENGuard Certified |



#18 - Sauterne

## SPECIAL INSTRUCTIONS

MANUFACTURER

Laticrete 1.800.243.4788

Kurt Weber 540-847-8453 klweber@laticrete.com

ALTERNATE MANUFACTURER 1

ALTERNATE MANUFACTURER 2

ALTERNATE MANUFACTURER 3

AREAS

Issue Date: 28 JUL 2017

Revision Date: 14 FEB 2019

| | |
|---|---|
| Item Name | Grout |
| Manufacturer: | Laticrete |
| Product Type: | 245 Platinum Polymer |
| Sealer: | Miraseal 511 Porous Plus |
| Color: | 44 - Bright White |
| Grout Joint Width: | 1/16" Minimum - 1/8" Maximum Grout Joint Width |
| Lead Time: | To Be Verified |
| Warranty: | Laticrete warrants that products will be free from manufacturing defects and will not break down or deteriorate under normal usage for a period of (1) year from the date of purchase when installed in accordance with Laticrete specifications. |
| Eco-Feature(s) *as per manufacturer: | GREENGuard Certified |

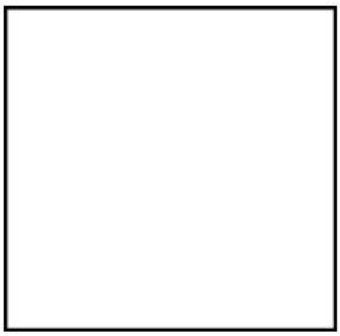

#44 - Bright White

## SPECIAL INSTRUCTIONS

MANUFACTURER

Laticrete 1.800.243.4788

Kurt Weber 540-847-8453 klweber@laticrete.com

ALTERNATE MANUFACTURER 1

ALTERNATE MANUFACTURER 2

ALTERNATE MANUFACTURER 3

AREAS

Public Space

Indoor Pool (Splash)

Pool (Splash)

Issue Date: 14 FEB 2019

Revision Date:

| | |
|---|---|
| Item Name | Grout |
| Manufacturer: | Laticrete |
| Product Type: | 1500 Sanded |
| Color: | 45 - Raven |
| Grout Joint Width: | 3/16" Minimum - 1/8" Maximum Grout Joint Width |
| Lead Time: | TBD |
| Warranty: | Laticrete warrants that products will be free from manufacturing defects and will not break down or deteriorate under normal usage for a period of (1) year from the date of purchase when installed in accordance with Laticrete specifications. |
| Eco-Feature(s) *as per manufacturer: | GREEDGuard Certified |

## SPECIAL INSTRUCTIONS

MANUFACTURER

Laticrete 1.800.243.4788

Kurt Weber 540-847-8453 klweber@laticrete.com

ALTERNATE MANUFACTURER 1

ALTERNATE MANUFACTURER 2

ALTERNATE MANUFACTURER 3

AREAS

Public Space

Pool (Splash) Restroom (w/c)

Indoor Pool (Splash)

Pool (Splash)

# GR-009

Grout

Issue Date: 14 FEB 2019

Revision Date:

| | |
|---|---|
| Item Name | Grout |
| Manufacturer: | Laticrete |
| Product Type: | 1500 Sanded |
| Sealer: | Miraseal 511 Porous Plus |
| Color: | 46 - Quarry Red |
| Grout Joint Width: | 1/16" Minimum - 1/8" Maximum Grout Joint Width |
| Lead Time: | To Be Verified |
| Warranty: | Laticrete warrants that products will be free from manufacturing defects and will not break down or deteriorate under normal usage for a period of (1) year from the date of purchase when installed in accordance with Laticrete specifications. |
| Eco-Feature(s) *as per manufacturer: | GREENGuard Certified |

## SPECIAL INSTRUCTIONS

MANUFACTURER

Laticrete 1.800.243.4788

Kurt Weber 540-847-8453 klweber@laticrete.com

ALTERNATE MANUFACTURER 1

ALTERNATE MANUFACTURER 2

ALTERNATE MANUFACTURER 3

AREAS

Public Space

Public Restroom - Women's (w/c)

# GR-010

Grout

Issue Date: 14 FEB 2019

Revision Date:

| | |
|---|---|
| Item Name | Grout |
| Manufacturer: | Laticrete |
| Product Type: | 1500 Sanded |
| Sealer: | Miraseal 511 Porous Plus |
| Color: | 53 - Twilight Blue |
| Grout Joint Width: | 1/16" Minimum - 1/8" Maximum Grout Joint Width |
| Lead Time: | To Be Verified |
| Warranty: | Laticrete warrants that products will be free from manufacturing defects and will not break down or deteriorate under normal usage for a period of (1) year from the date of purchase when installed in accordance with Laticrete specifications. |
| Eco-Feature(s) *as per manufacturer: | GREENGuard Certified |

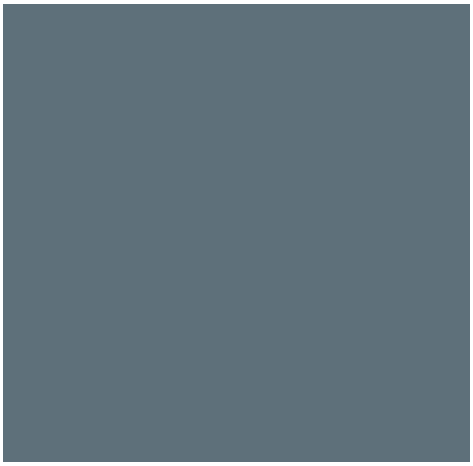

## SPECIAL INSTRUCTIONS

MANUFACTURER

Laticrete 1.800.243.4788

Kurt Weber 540-847-8453 klweber@laticrete.com

ALTERNATE MANUFACTURER 1

ALTERNATE MANUFACTURER 2

ALTERNATE MANUFACTURER 3

AREAS

Public Space

Public Restroom - Men's (w/c)

# GR-011

Grout

Issue Date: 14 FEB 2019

Revision Date:

| | |
|---|---|
| Item Name | Grout |
| Manufacturer: | Laticrete |
| Product Type: | 1500 Sanded |
| Sealer: | Mineral Seal 511 Porous Plus |
| Color: | 78 - Sterling Silver |
| Grout Joint Width: | 1/16" Minimum - 1/8" Maximum Grout Joint Width |
| Lead Time: | To Be Verified |
| Warranty: | Laticrete warrants that products will be free from manufacturing defects and will not break down or deteriorate under normal usage for a period of (1) year from the date of purchase when installed in accordance with Laticrete specifications. |
| Eco-Feature(s) *as per manufacturer: | GREENGuard Certified |

## SPECIAL INSTRUCTIONS

MANUFACTURER

Laticrete 1.800.243.4788

Kurt Weber 540-847-8453 klweber@laticrete.com

ALTERNATE MANUFACTURER 1

ALTERNATE MANUFACTURER 2

ALTERNATE MANUFACTURER 3

AREAS

Public Space

Public Restroom - Men's (w/c)

Public Restroom - Women's (w/c)

# GR-012

Grout

Issue Date: 14 FEB 2019

Revision Date:

| | |
|---|---|
| Item Name | Grout |
| Manufacturer: | Laticrete |
| Product Type: | 1500 Sanded |
| Sealer: | Miraseal 511 Porous Plus |
| Color: | 44 - Bright White |
| Grout Joint Width: | 1/16" Minimum - 1/8" Maximum Grout Joint Width |
| Lead Time: | To Be Verified |
| Warranty: | Laticrete warrants that products will be free from manufacturing defects and will not break down or deteriorate under normal usage for a period of (1) year from the date of purchase when installed in accordance with Laticrete specifications. |
| Eco-Feature(s) *as per manufacturer: | GREENGuard Certified |

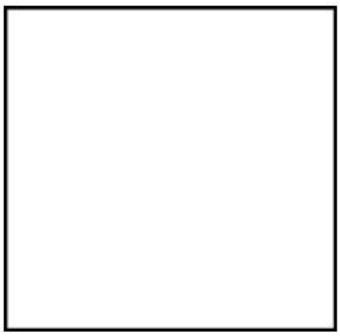

#44 - Bright White

## SPECIAL INSTRUCTIONS

MANUFACTURER

Laticrete 1.800.243.4788

Kurt Weber 540-847-8453 klweber@laticrete.com

ALTERNATE MANUFACTURER 1

ALTERNATE MANUFACTURER 2

ALTERNATE MANUFACTURER 3

AREAS

Public Space

Bar (W XYZ)

Metal Base

# MB-001

Revision 4

Metal Base

Issue Date: 28 JUL 2017

Revision Date: 14 FEB 2019

| | |
|---|---|
| Item Name | Metal Sheeting |
| Description: | Public Restroom vanity wall base |
| Manufacturer: | Rimex Metals USA |
| Product: | CANVAS OneTex |
| Material: | 304 Stainless Steel |
| Finish: | Bright Annealed (BA) |
| Dimensions: | 49.2" W |
| Lengths: | 96" and 120" available<br>(GC to verify) |
| Gauge: | 8 mm / 1.5 mm (preferred)<br>(VIF) |
| Corners: | To be verified |
| Quality Standards: | 70% recycled material |
| Lead Time: | To be verified |
| Warranty: | Rimex provides written warranties for its products on an individual contract basis. Please contact Rimex for further details. |

## SPECIAL INSTRUCTIONS

MANUFACTURER

Rimex Metals USA Inc. 732-549-3800

Cyndi Zahn czahn@rimexusa.com

ALTERNATE MANUFACTURER 1

ALTERNATE MANUFACTURER 2

ALTERNATE MANUFACTURER 3

AREAS

Public Space

Public Restroom - Men's (w/c)

Public Restroom - Women's (w/c)

# MB-002

Revision 1

Metal Base

Issue Date: 28 JUL 2017

Revision Date: 29 JAN 2018

| | |
|---|---|
| Item Name | Metal Sheeting |
| Description: | Metal wall base |
| Manufacturer: | Chemetal |
| Product: | Light Stainless Steel 727 |
| Finish: | Brushed |
| Dimensions: | 48"W |
| Lengths: | 96" and 120" available (GC to verify) |
| Gauge: | HPL .032" |
| Lead Time: | Varies on QTY. 1-8 Weeks Max |
| Warranty: | None |



## SPECIAL INSTRUCTIONS

MANUFACTURER

Chemetal Metal Laminates (413) 529-0718

ALTERNATE MANUFACTURER 1

ALTERNATE MANUFACTURER 2

ALTERNATE MANUFACTURER 3

AREAS

Public Space

Front Desk (Check-in)

Metal Ceiling Panel

# ALOFT Hotels G4.0-Public Spaces

## G4.0

## BUILDING PRODUCT MANUAL

# MCP-001

Metal Panel Ceiling

Issue Date: 14 FEB 2019
Revision Date:

| | |
|---|---|
| Item Name | Metal Ceiling Panel with Perforated Panels |
| Manufacturer: | USG |
| Product: | Celebration Snap-in Metal Panels |
| Dimensions: | Module Size: 4'x4' |
| Finish: | Matte |
| Color: | RAL 5009 |
| Metal Perforation: | Pattern No. A500<br>Round 1/2" perforations, 0.848" o.c.<br>55% open area |
| Edge Details: | See MCP-002 for metal trim deails. |
| Quality Standards: | ASTM C635 |
| Lead Time: | TBD |
| Warranty: | 30 Year Limited Warranty |

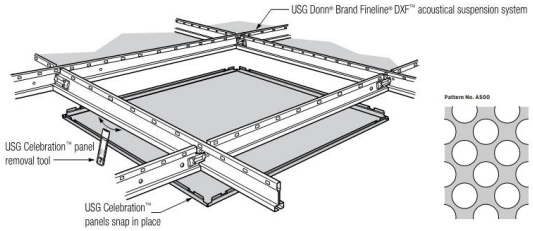


## SPECIAL INSTRUCTIONS

MANUFACTURER

| | |
|---|---|
| USG Building Products | (800) 874-3932 |
| Ado Ade | (845) 786-2820 |

ALTERNATE MANUFACTURER 1

ALTERNATE MANUFACTURER 2

ALTERNATE MANUFACTURER 3

AREAS

Public Space

Fitness Center (Re:Charge)

**ALOFT Hotels G4.0-Public Spaces**

**G4.0**

**BUILDING PRODUCT MANUAL**

# MCP-002

Metal Panel Ceiling

Issue Date: 14 FEB 2019

Revision Date:

| | |
|---|---|
| Item Name | Metal Trim |
| Manufacturer: | USG Architectural Services |
| Product: | Compasso Standard Elite Trim |
| Thickness: | 2" H |
| Finish: | Steel, Aluminum |
| Color: | Color to match Tiger Drylac RAL #5009 |
| Lead Time: | TBD |
| Warranty: | TBD |
| Notes: | To be attached to MCP-001 |

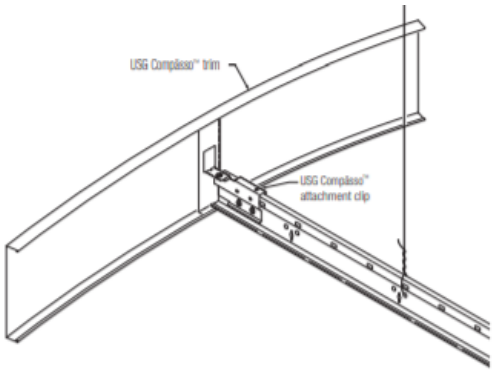


## SPECIAL INSTRUCTIONS

MANUFACTURER

| | |
|---|---|
| USG Building Products | (800) 874-3932 |
| Ado Ade | (845) 786-2820 |

ALTERNATE MANUFACTURER 1

ALTERNATE MANUFACTURER 2

ALTERNATE MANUFACTURER 3

AREAS

Public Space

Fitness Center (Re:Charge)

Metal Ceiling Panel Cutsheets

USG Ceiling Solutions

# USG CELEBRATION™ SNAP-IN METAL PANELS

**MCP-002**
Revision Date:

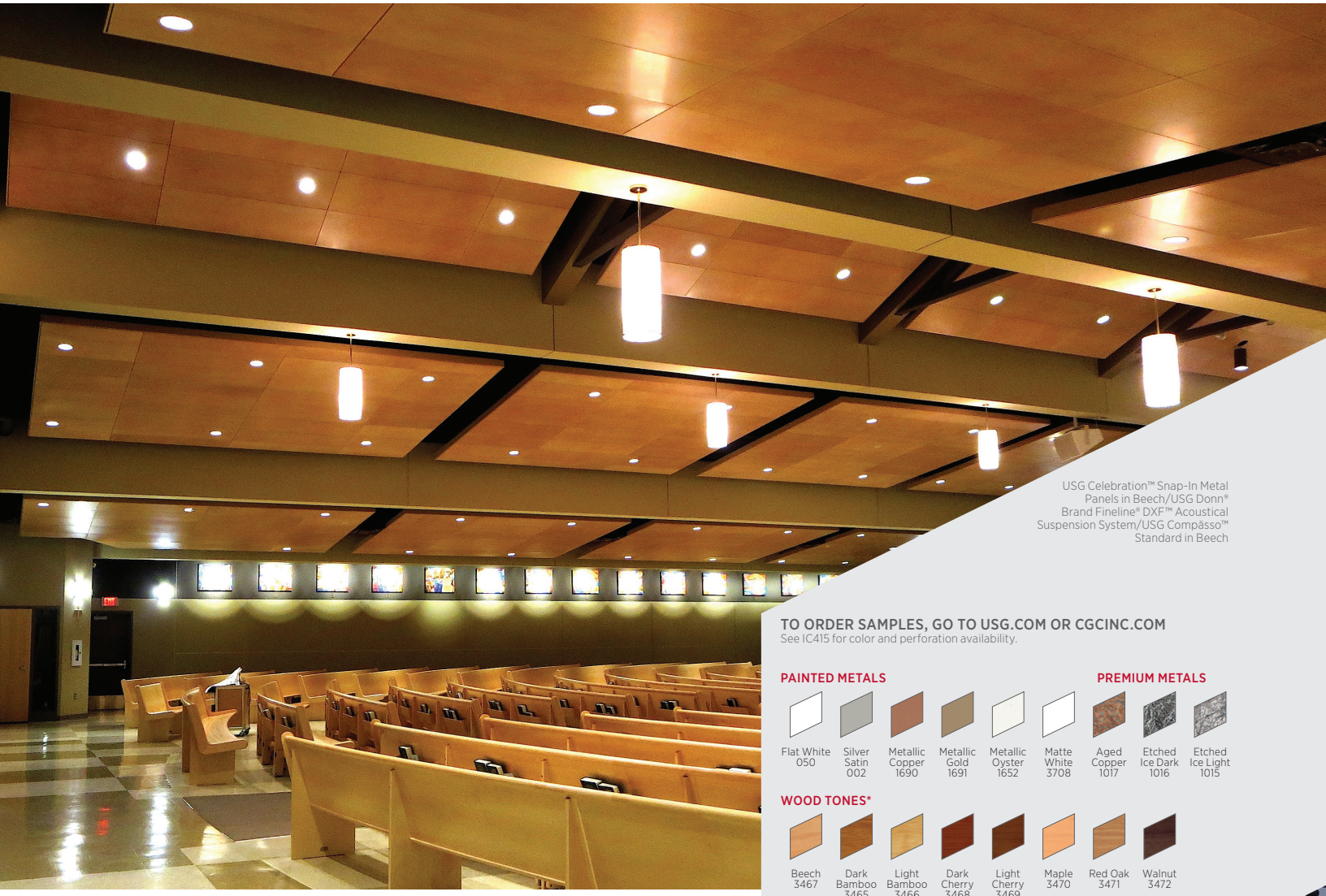

USG Celebration™ Snap-In Metal Panels in Beech/USG Donn® Brand Fineline® DXF™ Acoustical Suspension System/USG Compässo™ Standard in Beech

## TO ORDER SAMPLES, GO TO USG.COM OR CGCINC.COM

See IC415 for color and perforation availability.

### PAINTED METALS


Flat White 050


Silver Satin 002


Metallic Copper 1690


Metallic Gold 1691


Metallic Oyster 1652


Matte White 3708

### PREMIUM METALS


Aged Copper 1017


Etched Ice Dark 1016


Etched Ice Light 1015

### WOOD TONES*


Beech 3467


Dark Bamboo 3465


Light Bamboo 3466


Dark Cherry 3468


Light Cherry 3469


Maple 3470


Red Oak 3471


Walnut 3472

### ANODIZED METALS


Brushed Aluminum 058


Polished Chrome PM61


Polished Brass PM21


Satin Chrome PM614

*Grid and trim available in painted coordinating colors.

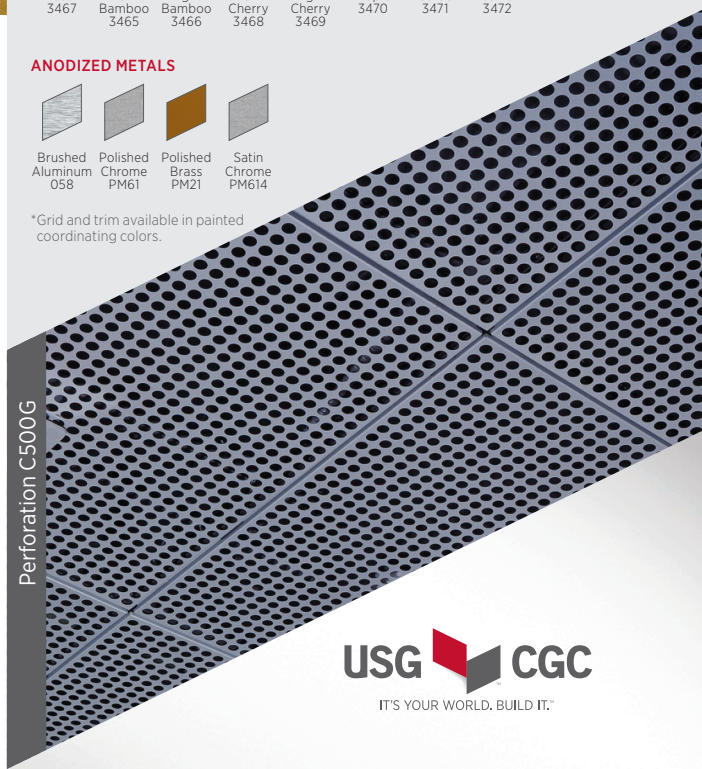


## FEATURES AND BENEFITS

- Aluminum panels provide a monolithic appearance.
- Easy installation into standard USG Donn® Brand Fineline® DXF™ Acoustical Suspension System.
- Aluminum panels are positively attached to the suspension system through engineered connection.
- Downward panel access is excellent for shallow plenum areas.
- Wall-mount solution available; see IC605.
- Wind load tested and approved, including Miami-Dade NOA, for exterior applications with proper bracing and framing.

## APPLICATIONS

- Entertainment
- Gaming
- Exterior ceilings
- Hospitality
- Transportation terminals

USG CGC
IT'S YOUR WORLD. BUILD IT.™

# USG CELEBRATION™ SNAP-IN METAL PANELS

**MCP-002**
Revision Date:

**ORDER SAMPLES/LITERATURE**
**USG:** samplit@usg.com
fax: 888 874-2348 | usg.com
**CGC:** contact Sales Representative

**TECHNICAL SERVICES**
800 USG.4YOU (874-4968)

usgdesignstudio.com
cgcdesignstudio.com

HRC HIGH RECYCLED CONTENT

## PRODUCT INFORMATION

| Materials | Finishes | Typical Module Sizes[1] | Plenum Depth | Weight |
|---|---|---|---|---|
| Aluminum panels | Painted, powder coated or anodized in a variety of optional perforation and embossing patterns. | 1′x 4′, 1′x 5′, 2′x 2′, 2′x 4′, 2′x 6′, 2′x 8′, 4′x 4′[2], 20″x 60″, 30″x 30″, 30″x 60″ | Since panels are installed from below, the clearance for installation and removal of panels is minimal. Additional plenum clearance of up to 9″ may be required for air boot and lighting installations, depending on the unit selected. | Approximately 0.53 lb./sq. ft., not including lights and air diffusers. |

## GRID LAYOUT

The modular nature of USG Celebration™ Snap-In panels must be considered when an assembly is designed. The main tees and cross tees must be installed exactly on module lines. USG Celebration Snap-In panels cannot be installed across main tee and a 4 ft. cross tee. Panels may be field-cut at walls and columns or terminated at a grid module for island installations. Larger panels will require cross tees at their midspan[2]. Please refer to IC592 for more information.

## ACOUSTICS[3]

| Description | Optional Acoustical Material | Sound Rating – NRC | |
|---|---|---|---|
| | | Perforation A062 | Perforation A116 |
| Perforated Panel | Acoustibond™ backer | 0.60 | 0.70 |
| Perforated Panel | 2″, 0.75 lb. fiberglass in polybag (by others) | 0.85 | 0.90 |

## AIR HANDLING

The USG Celebration™ diffuser is an extruded aluminum frame with matching faceplate and color-coordinated vanes, in one-, two-, three- and four-slot configurations, with four-directional throw. Please refer to IC415 for more information.

## CODE APPROVAL

USG Celebration™ Snap-In panels provide a continuous interlock with the suspension system through positive attachment. Supporting grid is capable of sustaining loads greater than those imposed by the USG Celebration system when installed in accordance with manufacturer's instructions. The system meets requirements of ASTM C635 and tested per AC368. See PER-14077 and PER-12055.

## PERSPECTIVE

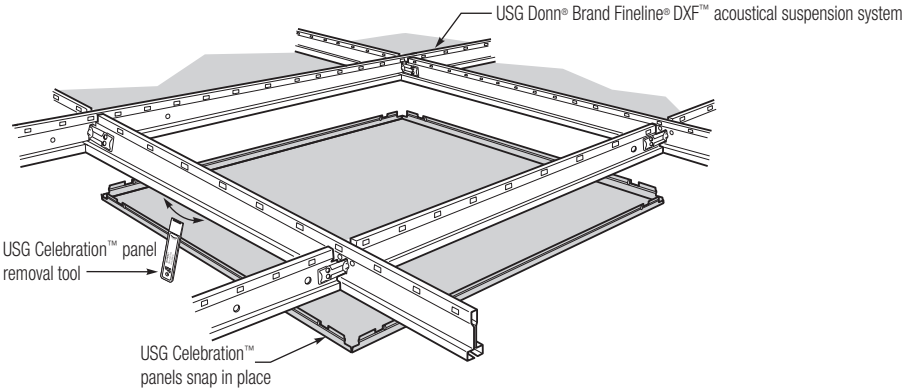


## USG CELEBRATION™ AIR DIFFUSER

Available in one-, two-, three- and four-slot configurations, with four-directional throw. See IC415.

**View from above**

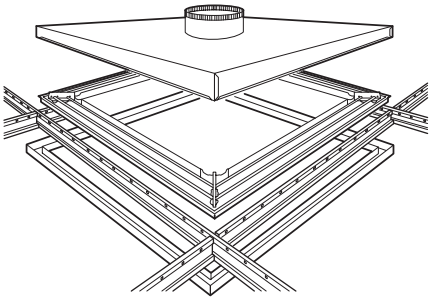

**View from below**

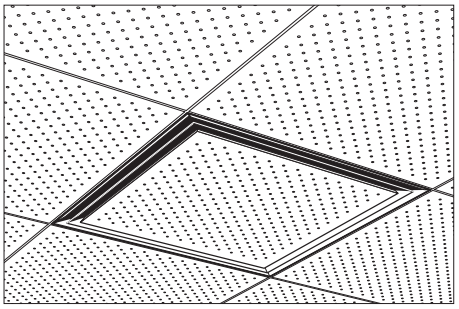

## FOR MORE INFORMATION

**Product literature**
System brochure: IC415
Data sheet: IC308
Perforations selection guide: IC425
Exterior ceiling systems guide: SC2561

**Online tools**
usgdesignstudio.com or cgcdesignstudio.com

**Limitation**
Some commercially acceptable color variation may occur between lots and between different size products of the same color. For more information about metal ceiling finishes, refer to *Metal Ceilings Technical Guidelines* published by the Ceilings & Interior Systems Construction Association.

**ASTM E84 surface-burning characteristics (with Acoustibond™ backer)**
Class A
Flame spread: 25 or less
Smoke developed: 50 or less

**ASTM E84 surface-burning characteristics (with light diffusing backer)**
Class A
Flame spread: 25 or less
Smoke developed: 50 or less

**Notes**
1. Additional sizes available on request.
2. – If panel length is ≥ 60 inches then one stabilizer bar or cross tee is required at midpoint.
   – If panel length is ≥ 96 inches then two stabilizer bars or cross tees are required at the 1/3 and 2/3 points.
   – Cross tees ≥ 96 inches used in large modules shall have hanger wires installed minimum 4 ft. o.c.
3. Refer to IC425 for additional NRC information based on perforation pattern.

**High Recycled Content**
Classified as containing greater than 50% total recycled content. Total recycled content is based on product composition of postconsumer and preconsumer (postindustrial) recycled content per FTC guidelines.

Client: Resurrection Roman Catholic Parish, Regina, Saskatchewan
Architect: Stantec Architecture Ltd.
Structural: JC Kenyon Engineering
Mechanical: Stantec Consulting
Electrical: Ritenburg and Associates Ltd.
Interior Design Consultant: Innovative Interiors

**Notice**
The information in this document is subject to change without notice. CGC Inc. or USG Corp. assumes no responsibility for any errors that may inadvertently appear in this document.

**IC308/rev. 11-16**
© 2016 USG Corporation and/or its affiliates. All rights reserved.
Printed in U.S.A.

Manufactured by
USG Interiors, LLC
550 West Adams Street
Chicago, IL 60661

The trademarks USG, CGC, ACOUSTIBOND, CELEBRATION, COMPÁSSO, DONN, DXF, FINELINE, IT'S YOUR WORLD. BUILD IT., the USG/CGC logo, the design elements and colors, and related marks are trademarks of USG Corporation or its affiliates.

Safety First! Follow good safety/industrial hygiene practices during installation. Wear appropriate personal protective equipment. Read SDS and literature before specification and installation.

USG CGC

USG
Ceiling
Solutions

MCP-002

Revision Date:

# USG PERFORATIONS
## METAL CEILING SYSTEMS

**SELECTION GUIDE**

USG CGC

IT'S YOUR WORLD. BUILD IT.™

# METAL PERFORATIONS

**Please call 866 528-7089 to request a sample.**

Presenting a complete line of perforation options for:

- USG Celebration™ Metal Panels
- USG Curvatura™ 3-Dimensional Ceiling System
- USG Geometrix® 3-Dimensional Metal Panels
- USG Panz® Metal Panels

## STANDARD PERFORATIONS

| Pattern Number | Perforation Pattern | Open Area %[4] | NRC[6] |
|---|---|---|---|
| A062 | Round 1/16″ Perforations, 0.25″ o.c. (without border) | 5% | 0.60 |
| A062A | Round 1/16″ Perforations, 0.25″ o.c. | 5% | — |
| A062D (Micro perf.) | Round .062″ Perforations, 0.124″ o.c. | 19% | — |
| A116 | Round 15/128″ Perforations, 0.354″ o.c. | 17% | 0.70 |
| A188 | Round 3/16″ Perforations, 1″ o.c. | 3% | 0.35 |
| A250 | Round 1/4″ Perforations, 0.5″ o.c. | 39% | 0.75 |
| A500[1,5] | Round 1/2″ Perforations, 0.848″ o.c. | 55% | — |
| B079 | Round 5/64″ Perforations, 0.312″ o.c. | 6% | — |
| B125 | Round 1/8″ Perforations, 0.375″ o.c. | 10% | — |
| B188A | Round 3/16″ Perforations, 0.312″ o.c. | 33% | — |
| B197 | Round 13/64″ Perforations, 0.316″ o.c. | 35% | — |
| B250 | Round 1/4″ Perforations, 0.437″ o.c. | 30% | — |
| B250H (Formerly H250)[5] | Round 1/4″ Perforations, 0.32″ o.c. | 58% | — |
| B312 | Round 5/16″ Perforations, 0.437″ o.c. | 46% | — |
| B500[1,5] | Round 1/2″ Perforations, 0.600″ o.c. | 63% | — |
| C030[6] | Round 1/32″ Perforations, 0.197″ o.c. | 1.8% | 0.65 |
| C040 | Round 5/128″ Perforations, 0.197″ o.c. | 3.2% | — |
| C062[2] | Round 1/16″ Perforations, 0.351″ o.c. | 2% | 0.40 |
| C062A[2] | Round 1/16″ Perforations, 0.175″ o.c. | 10% | — |
| C116 | Round 15/128″ Perforations, 0.344″ o.c. | 8% | 0.65 |
| C188[1] | Round 3/16″ Perforations, 1.414″ o.c. | 1% | 0.35 |
| C250A | Round 1/4″ Perforations, 0.65″ o.c. | 12% | — |
| C375[2] | Round 3/8″ Perforations, 1.125″ o.c. | 9% | — |
| C500 | Round 1/2″ Perforations, 1.5″ o.c. | 9% | 0.60 |
| D250[2] | Square 1/4″ Perforations, 0.75″ o.c. | 11% | — |
| D375[2] | Square 3/8″ Perforations, 1.125″ o.c. | 11% | — |
| D500 | Square 1/2″ Perforations, 1.5″ o.c. | 17% | — |
| D500D[5] | Square 1/2″ Perforations, 0.595″ o.c. | 70% | — |
| EC25D[3] | Round 1/4″ dia. x 1/16″ Embossing, 1.18″ o.c.; No Perforation | 0% | — |
| EC25U3 | Round 1/4″ dia. x 1/16″ Embossing, 1.18″ o.c.; No Perforation | 0% | — |
| EM25D3 | Round 1/4″ dia. x 1/16″ Embossing, 1/4″ Perforations, 1.14″ o.c. | 2% | — |
| EM25U3 | Round 1/4″ dia. x 1/16″ Embossing, 1/4″ Perforations, 1.14″ o.c. | 2% | — |

**Notes**

1. Do not use with USG Curvatura™ One-Directional Ceiling System.
2. Standard for USG Geometrix® panels.
3. 2′x2′ USG Celebration™ and Panz® panels only.
4. Panels with an open area ≥ 50% offered in 2′x2′ only.
5. 2′ wide USG Celebration™ Snap-In, Celebration Torsion Spring, Panz® and Curvatura™ panels up to 6′ long only.
6. The NRC values are from tested perforated panels with Acoustibond™ backer only.

# METAL PERFORATIONS

## STANDARD PERFORATIONS[7]

**Pattern No. A062/A062A**

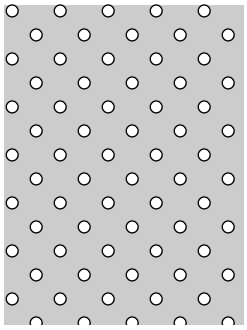

Round—1/16″ perforations
0.25″ o.c., 5% open area

**Pattern No. A062D**

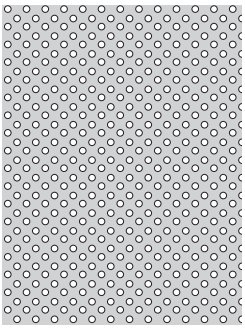

Round—0.062″ perforations
0.124″ o.c., 19% open area
Micro perf.

**Pattern No. A116**

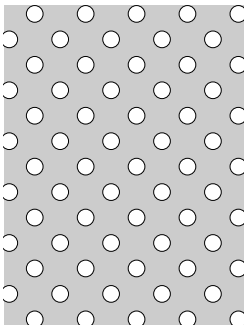

Round—15/128″ perforations
0.354″ o.c., 17% open area

**Pattern No. A188**

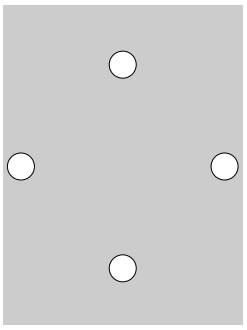

Round—3/16″ perforations
1″ o.c., 3% open area

**Pattern No. A250**

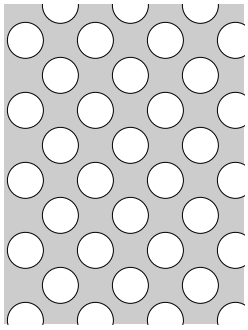

Round—1/4″ perforations
0.5″ o.c., 39% open area

**Pattern No. A500**

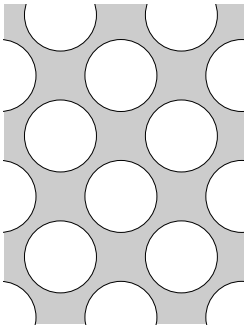

Round—1/2″ perforations
0.848″ o.c., 55% open area not to be used with the USG Curvatura™ One-Directional Ceiling System

**Pattern No. B079**

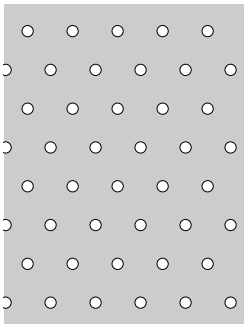

Round—5/64″ perforations
0.312″ o.c., 6% open area

**Pattern No. B125**

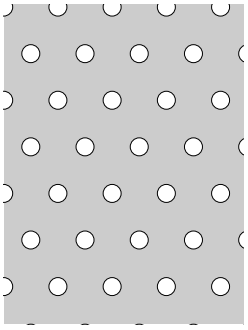

Round—1/8″ perforations
0.375″ o.c., 10% open area

**Pattern No. B188A**

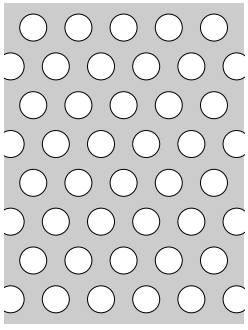

Round—3/16″ perforations
0.312″ o.c., 33% open area

**Pattern No. B197**

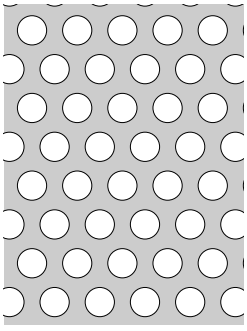

Round—13/64″ perforations
0.316″ o.c., 35% open area

**Pattern No. B250**

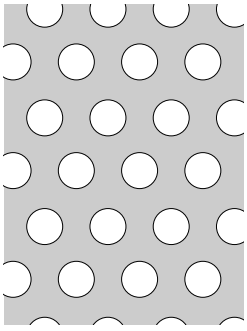

Round—1/4″ perforations
0.437″ o.c., 30% open area

**Pattern No. B250H (formerly H250)**

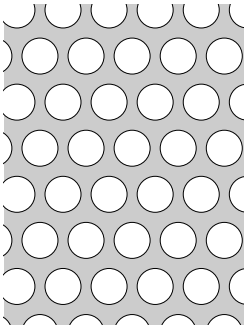

Round—1/4″ perforations
0.32″ o.c., 58% open area

USG Ceiling Solutions

# USG COMPÄSSO™ ELITE EXTRUDED ALUMINUM PERIME
# USG COMPÄSSO™ STANDARD PERIMETER TRIMS

**MCP-003**
Revision Date:

USG Compässo™ Elite Perimeter Trim with USG Halcyon™ Acoustical Panels/USG Donn® Brand Fineline® DXF™ Acoustical Suspension System

TO ORDER SAMPLES, GO TO USG.COM OR CGCINC.COM

**PAINTED METALS**

Flat White 050 | Silver Satin 002 | Coordinating Matte White 3756

**POWDER-COATED METAL**

Powder White 3767

**WOOD TONES (COMPASSO STANDARD ONLY)**

Beech 3467 | Dark Bamboo 3465 | Light Bamboo 3466 | Dark Cherry 3468 | Light Cherry 3469 | Maple 3470 | Red Oak 3471 | Walnut 3472

## FEATURES AND BENEFITS

- Creates free-form ceiling islands or fascias to define space and provide visual impact.
- Available in variable trim heights.
- Costs a fraction of conventional drywall soffit construction.
- Made to order; arrives on-site pre-engineered.
- Strong, durable and long-lasting steel or aluminum construction.
- Fits all USG ceiling systems.

## APPLICATIONS

- Contemporary offices
- Entertainment
- Gaming
- High-bay areas
- Retail spaces

USG CGC
IT'S YOUR WORLD. BUILD IT.™

# USG COMPÄSSO™ ELITE EXTRUDED ALUMINUM PERIMETER TRIMS
# USG COMPÄSSO™ STANDARD PERIMETER TRIMS

**ORDER SAMPLES/LITERATURE**
**USG:** samplit@usg.com
fax: 888 874-2348 | usg.com
**CGC:** contact Sales Representative

**TECHNICAL SERVICES**
800 USG.4YOU (874-4968)

**MCP-003**
Revision Date:

## PRODUCT INFORMATION

| Materials | Finishes |
|---|---|
| Steel, aluminum | Painted, anodized, plated, powder coat |

Perspective

**USG Compässo™ Standard shown**

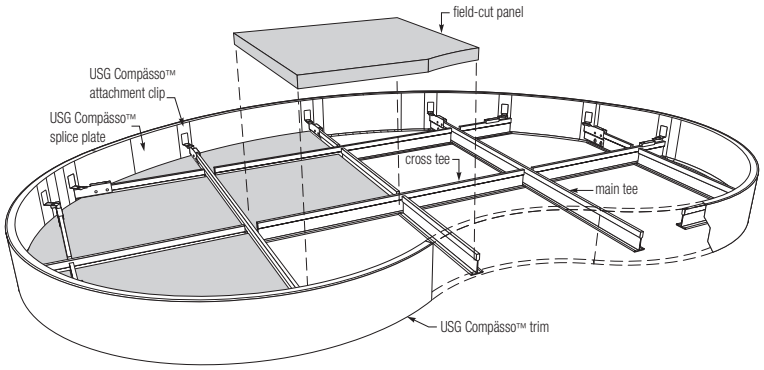


Trim Profiles

| 2", 2-1/4" | 4" | 6" | 8" | 10" | 12" (Standard Only) |
|---|---|---|---|---|---|
| 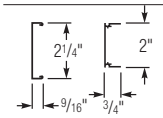 | 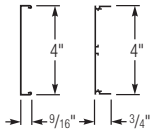 | 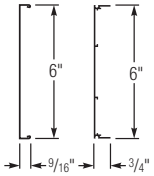 | 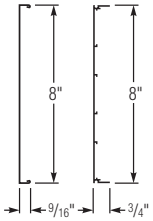 | 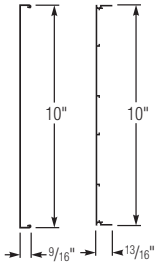 | 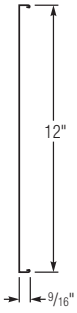 |



Standard - Left
Elite - Right

Attachment Clip

**USG Compässo™ Standard**

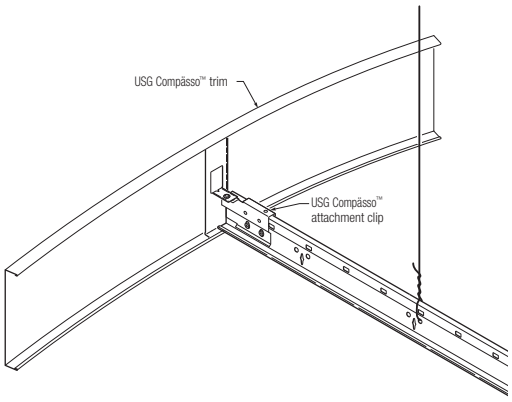


**USG Compässo™ Elite**

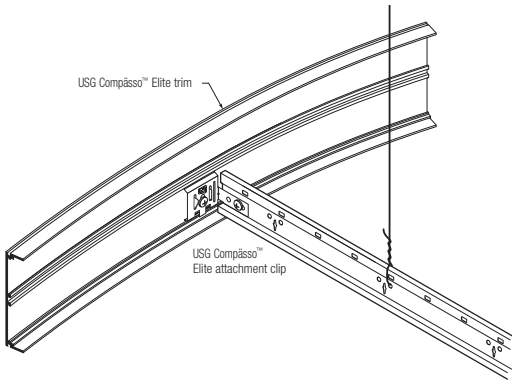


## FOR MORE INFORMATION

**Product literature**
System brochure: IC400
Data sheet: IC309

**Online tools**
usgdesignstudio.com
or cgcdesignstudio.com

**Recycled content**
See the Sustainability selector on usgdesignstudio.com
or cgcdesignstudio.com.

**Notice**
The information in this document is subject to change without notice. CGC Inc. or USG Corp. assumes no responsibility for any errors that may inadvertently appear in this document.

**IC309/rev. 8-17**
© 2017 USG Corporation and/or its affiliates. All rights reserved.
Printed in U.S.A.

Manufactured by
USG Interiors, LLC
550 West Adams Street
Chicago, IL 60661

The trademarks USG, CGC, COMPÄSSO, DONN, DXF, FINELINE, HALCYON, IT'S YOUR WORLD. BUILD IT., the USG/CGC logo, the design elements and colors, and related marks are trademarks of USG Corporation or its affiliates.

Safety First! Follow good safety/industrial hygiene practices during installation. Wear appropriate personal protective equipment. Read SDS and literature before specification and installation.

USG CGC

Paint

Issue Date: 28 JUL 2017

Revision Date: 14 FEB 2019

| | |
|---|---|
| Item Name | Wall Paint |
| Manufacturer: | Benjamin Moore |
| Color: | Black Panther (2125-10) |
| Product Type: | Paint: BM Aura Waterborne Interior Paint (2 coats)<br>Primer: N023 Fresh Start Acrylic |
| Finish: | Satin |
| Lead Time: | Varies per paint supplier |
| Warranty: | Limted Lifetime |
| Eco-Feature(s) *as per manufacturer: | VOC compliant in all regulated areas, anti-microbial, Green Seal GS-11 2010 |

## SPECIAL INSTRUCTIONS

1. Primer, undercoat, block filler, finish coat(s) are to be compatible and of the same manufacturer. All primers and undercoats are to be tinted to 50% lighter than the selected and approved finish coat color. All finish coats are to be tinted 25% darker than the primer coat until approved finish coat color is achieved. When the color schedule calls for the use of DEEP TONES (interior and/or exterior), it is the responsibility of the painting contractor to utilize the appropriate Deep Base Primers as manufactured by the painting company for use on the substrate for which they are intended.

2. Provide level 5 drywall finish prior to application of wall paint.

MANUFACTURER

Benjamin Moore & Co. 866-708-9181

Amy Figueora amy.figueroa@benjaminmoore.com

ALTERNATE MANUFACTURER 1

ALTERNATE MANUFACTURER 2

ALTERNATE MANUFACTURER 3

AREAS

Public Space

Bar (W XYZ)

Issue Date: 28 JUL 2017

Revision Date: 14 FEB 2019

| | |
|---|---|
| Item Name | Column Paint (Base Coat) |
| Description: | Intumescent paint at freestanding columns in public spaces (base coat) |
| Manufacturer: | Contego |
| Color: | White |
| Product Type: | Paint: Contego High Solids Intumescent Fire Barrier Latex<br>Primer: Fresh Start Acrylic |
| Finish: | Not applicable |
| Lead Time: | To be verfied |
| Warranty: | Warranted for 10 years from date of application against material defects. |
| Eco-Feature(s) *as per manufacturer: | Nontoxic, nondermatic, and noncarcinogenic acrylic latex |

## SPECIAL INSTRUCTIONS

1. Primer, undercoat, block filler, finish coat(s) are to be compatible and of the same manufacturer. All primers and undercoats are to be tinted to 50% lighter than the selected and approved finish coat color. All finish coats are to be tinted 25% darker than the primer coat until approved finish coat color is achieved. When the color schedule calls for the use of DEEP TONES (interior and/or exterior), it is the responsibility of the painting contractor to utilize the appropriate Deep Base
Primers as manufactured by the painting company for use on the substrate for which they are intended.

2. Provide level 5 drywall finish prior to application of wall paint.

MANUFACTURER

Contego International (800) 434-6444

Tony Scott (317) 580-0665 tony@contegointernational.com

ALTERNATE MANUFACTURER 1

ALTERNATE MANUFACTURER 2

ALTERNATE MANUFACTURER 3

AREAS

Public Space

Lobby (Re:Mix)

Issue Date: 28 JUL 2017

Revision Date: 29 JAN 2018

| | |
|---|---|
| Item Name | Column Paint (Top Coat) |
| Description: | Top coat paint for free standing columns in public spaces |
| Manufacturer: | Benjamin Moore & Co. |
| Color: | Black Panther (2125-10) |
| Product Type: | Paint: BM Aura Waterborne Interior Paint (2 coats)<br>Primer: N023 Fresh Start Acrylic |
| Finish: | Satin |
| Lead Time: | Varies per paint supplier |
| Warranty: | Limited Lifetime |
| Eco-Feature(s) *as per manufacturer: | VOC compliant in all regulated areas, anti-microbial, Green Seal GS-11 2010 |

## SPECIAL INSTRUCTIONS

1. Primer, undercoat, block filler, finish coat(s) are to be compatible and of the same manufacturer. All primers and undercoats are to be tinted to 50% lighter than the selected and approved finish coat color. All finish coats are to be tinted 25% darker than the primer coat until approved finish coat color is achieved. When the color schedule calls for the use of DEEP TONES (interior and/or exterior), it is the responsibility of the painting contractor to utilize the appropriate Deep Base
Primers as manufactured by the painting company for use on the substrate for which they are intended.

2. Provide level 5 drywall finish prior to application of wall paint.

MANUFACTURER

Benjamin Moore & Co. 866-708-9181

Amy Figueora amy.figueroa@benjaminmoore.com

ALTERNATE MANUFACTURER 1

ALTERNATE MANUFACTURER 2

ALTERNATE MANUFACTURER 3

AREAS

Public Space

Lobby (Re:Mix)

Issue Date: 28 JUL 2017

Revision Date: 14 FEB 2019

| | |
|---|---|
| Item Name | Ceiling Paint |
| Manufacturer: | Benjamin Moore |
| Color: | Black Panther (2125-10) |
| Product Type: | Paint: BM Aura Waterborne Interior Paint (2 coats)<br>Primer: N023 Fresh Start Acrylic |
| Finish: | Matte |
| Lead Time: | Varies per paint supplier |
| Warranty: | Limted Lifetime |
| Eco-Feature(s) *as per manufacturer: | VOC compliant in all regulated areas, anti-microbial, Green Seal GS-11 2010 |

## SPECIAL INSTRUCTIONS

1. Primer, undercoat, block filler, finish coat(s) are to be compatible and of the same manufacturer. All primers and undercoats are to be tinted to 50% lighter than the selected and approved finish coat color. All finish coats are to be tinted 25% darker than the primer coat until approved finish coat color is achieved. When the color schedule calls for the use of DEEP TONES (interior and/or exterior), it is the responsibility of the painting contractor to utilize the appropriate Deep Base
Primers as manufactured by the painting company for use on the substrate for which they are intended.

MANUFACTURER

Benjamin Moore & Co. 866-708-9181

Amy Figueora amy.figueroa@benjaminmoore.com

ALTERNATE MANUFACTURER 1

ALTERNATE MANUFACTURER 2

ALTERNATE MANUFACTURER 3

AREAS

Public Space

- Business Center (In Touch)
- Indoor Pool (Splash)
- Lobby (Re:Mix)
- Public Restroom - Men's (w/c)
- Public Restroom - Women's (w/c)

Issue Date: 28 JUL 2017

Revision Date: 14 FEB 2019

| | |
|---|---|
| Item Name | Wall Paint |
| Description: | Women's public restroom wall paint |
| Manufacturer: | Benjamin Moore & Co. |
| Color: | Snowfall White (OC-118) |
| Product Type: | Paint: BM Aura Waterborne Interior Paint (2 coats)<br>Primer: N023 Fresh Start Acrylic |
| Finish: | Satin |
| Lead Time: | Varies per paint supplier |
| Warranty: | Limited Lifetime |
| Eco-Feature(s) *as per manufacturer: | VOC compliant in all regulated areas, anti-microbial, Green Seal GS-11 2010 |

## SPECIAL INSTRUCTIONS

1. Primer, undercoat, block filler, finish coat(s) are to be compatible and of the same manufacturer. All primers and undercoats are to be tinted to 50% lighter than the selected and approved finish coat color. All finish coats are to be tinted 25% darker than the primer coat until approved finish coat color is achieved. When the color schedule calls for the use of DEEP TONES (interior and/or exterior), it is the responsibility of the painting contractor to utilize the appropriate Deep Base
Primers as manufactured by the painting company for use on the substrate for which they are intended.

2. Provide level 5 drywall finish prior to application of wall paint.

MANUFACTURER

Benjamin Moore & Co. 866-708-9181

Amy Figueora amy.figueroa@benjaminmoore.com

ALTERNATE MANUFACTURER 1

ALTERNATE MANUFACTURER 2

ALTERNATE MANUFACTURER 3

AREAS

Public Space

Public Restroom - Men's (w/c)

Public Restroom - Women's (w/c)

Issue Date: 28 JUL 2017

Revision Date: 14 FEB 2019

| | |
|---|---|
| Item Name | Wall Paint (Accent/Vanity Wall) |
| Description: | Women's public restrooms' accent/vanity wall paint |
| Manufacturer: | Benjamin Moore & Co. |
| Color: | Currant Red (1323) |
| Product Type: | Paint: Aura Waterborne Interior Paint (2 coats)<br>Primer: N023 Fresh Start Acrylic |
| Finish: | Satin |
| Lead Time: | Varies per paint supplier |
| Warranty: | Limited Lifetime |
| Eco-Feature(s) *as per manufacturer: | VOC compliant in all regulated areas, anti-microbial, Green Seal GS-11 2010 |

## SPECIAL INSTRUCTIONS

1. Primer, undercoat, block filler, finish coat(s) are to be compatible and of the same manufacturer. All primers and undercoats are to be tinted to 50% lighter than the selected and approved finish coat color. All finish coats are to be tinted 25% darker than the primer coat until approved finish coat color is achieved. When the color schedule calls for the use of DEEP TONES (interior and/or exterior), it is the responsibility of the painting contractor to utilize the appropriate Deep Base
Primers as manufactured by the painting company for use on the substrate for which they are intended.

2. Provide level 5 drywall finish prior to application of wall paint.

MANUFACTURER

Benjamin Moore & Co. 866-708-9181

Amy Figueora amy.figueroa@benjaminmoore.com

ALTERNATE MANUFACTURER 1

ALTERNATE MANUFACTURER 2

ALTERNATE MANUFACTURER 3

AREAS

Public Space

Public Restroom - Women's (w/c)

# PT-016

Revision 4

Paint

Issue Date: 28 JUL 2017

Revision Date: 14 FEB 2019

| | |
|---|---|
| Item Name | Wall Paint (Accent/Vanity Wall) |
| Description: | Men's Public Restroom accent/vanity wall paint |
| Manufacturer: | Benjamin Moore & Co. |
| Color: | Nightfall (1596) |
| Product Type: | Paint: Aura Waterborne Interior Paint (2 coats)<br>Primer: N023 Fresh Start Acrylic |
| Finish: | Satin |
| Lead Time: | Varies per paint supplier |
| Warranty: | Limited Lifetime |
| Eco-Feature(s) *as per manufacturer: | VOC compliant in all regulated areas, anti-microbial, Green Seal GS-11 2010 |

## SPECIAL INSTRUCTIONS

1. Primer, undercoat, block filler, finish coat(s) are to be compatible and of the same manufacturer. All primers and undercoats are to be tinted to 50% lighter than the selected and approved finish coat color. All finish coats are to be tinted 25% darker than the primer coat until approved finish coat color is achieved. When the color schedule calls for the use of DEEP TONES (interior and/or exterior), it is the responsibility of the painting contractor to utilize the appropriate Deep Base
Primers as manufactured by the painting company for use on the substrate for which they are intended.

2. Provide level 5 drywall finish prior to application of wall paint.

MANUFACTURER

Benjamin Moore & Co. 866-708-9181

Amy Figueora amy.figueroa@benjaminmoore.com

ALTERNATE MANUFACTURER 1

ALTERNATE MANUFACTURER 2

ALTERNATE MANUFACTURER 3

AREAS

Public Space

Public Restroom - Men's (w/c)

# PT-018

Revision 4

Paint

Issue Date: 28 JUL 2017

Revision Date: 14 FEB 2019

| | |
|---|---|
| Item Name | Door Paint |
| Description: | Meeting and storage room door paint |
| Manufacturer: | Benjamin Moore & Co. |
| Color: | Kendall Charcoal (HC-166) |
| Product Type: | Paint: Aura Waterborne Interior Paint<br>Primer: N023 Fresh Start Acrylic |
| Finish: | Semi-gloss |
| Lead Time: | Varies per paint supplier |
| Warranty: | Limited Lifetime |
| Eco-Feature(s) *as per manufacturer: | VOC compliant in all regulated areas, anti-microbial, Green Seal GS-11 2010 |

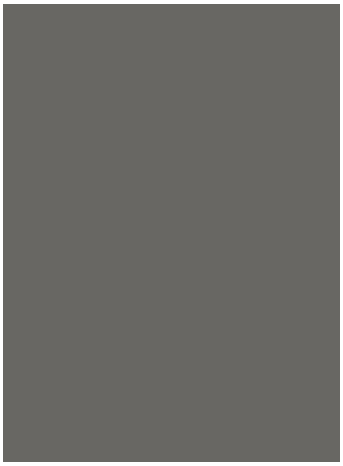

## SPECIAL INSTRUCTIONS

1. Primer, undercoat, block filler, finish coat(s) are to be compatible and of the same manufacturer. All primers and undercoats are to be tinted to 50% lighter than the selected and approved finish coat color. All finish coats are to be tinted 25% darker than the primer coat until approved finish coat color is achieved. When the color schedule calls for the use of DEEP TONES (interior and/or exterior), it is the responsibility of the painting contractor to utilize the appropriate Deep Base
Primers as manufactured by the painting company for use on the substrate for which they are intended.

MANUFACTURER

Benjamin Moore & Co. 866-708-9181

Amy Figueora amy.figueroa@benjaminmoore.com

ALTERNATE MANUFACTURER 1

ALTERNATE MANUFACTURER 2

ALTERNATE MANUFACTURER 3

AREAS

Public Space

Meeting (Tactic)

Issue Date: 28 JUL 2017

Revision Date: 14 FEB 2019

| | |
|---|---|
| Item Name | Ceiling Paint |
| Description: | Splash (pool) restroom ceiling paint |
| Manufacturer: | Benjamin Moore & Co. |
| Color: | Classic Gray 1548 |
| Product Type: | Paint: Aura Waterborne Interior Paint (2 coats)<br>Primer: N023 Fresh Start Acrylic |
| Finish: | Flat (Eggshell) |
| Lead Time: | Varies per paint supplier |
| Warranty: | Limited Lifetime |
| Eco-Feature(s) *as per manufacturer: | VOC compliant in all regulated areas, anti-microbial, Green Seal GS-11 2010 |

## SPECIAL INSTRUCTIONS

1. Primer, undercoat, block filler, finish coat(s) are to be compatible and of the same manufacturer. All primers and undercoats are to be tinted to 50% lighter than the selected and approved finish coat color. All finish coats are to be tinted 25% darker than the primer coat until approved finish coat color is achieved. When the color schedule calls for the use of DEEP TONES (interior and/or exterior), it is the responsibility of the painting contractor to utilize the appropriate Deep Base
Primers as manufactured by the painting company for use on the substrate for which they are intended.

MANUFACTURER

Benjamin Moore & Co. 866-708-9181

Amy Figueora amy.figueroa@benjaminmoore.com

ALTERNATE MANUFACTURER 1

ALTERNATE MANUFACTURER 2

ALTERNATE MANUFACTURER 3

AREAS

Public Space

Pool (Splash) Restroom (w/c)

Issue Date: 28 JUL 2017

Revision Date: 14 FEB 2019

| | |
|---|---|
| Item Name | Ceiling Paint |
| Description: | Back-of-house ceiling paint |
| Manufacturer: | Benjamin Moore & Co. |
| Color: | Snow White (OC-66) |
| Product Type: | Paint: Aura Waterborne Interior Paint (2 coats)<br>Primer: N023 Fresh Start Acrylic |
| Finish: | Matte |
| Lead Time: | Varies per paint supplier |
| Warranty: | Limited Lifetime |
| Eco-Feature(s) *as per manufacturer: | VOC compliant in all regulated areas, anti-microtobial, Green Seal GS-11 2010 |

## SPECIAL INSTRUCTIONS

1. Primer, undercoat, block filler, finish coat(s) are to be compatible and of the same manufacturer. All primers and undercoats are to be tinted to 50% lighter than the selected and approved finish coat color. All finish coats are to be tinted 25% darker than the primer coat until approved finish coat color is achieved. When the color schedule calls for the use of DEEP TONES (interior and/or exterior), it is the responsibility of the painting contractor to utilize the appropriate Deep Base
Primers as manufactured by the painting company for use on the substrate for which they are intended.

MANUFACTURER

Benjamin Moore & Co. 866-708-9181

Amy Figueora amy.figueroa@benjaminmoore.com

ALTERNATE MANUFACTURER 1

ALTERNATE MANUFACTURER 2

ALTERNATE MANUFACTURER 3

AREAS

See Area Addendum

# PT-021

Revision 4

Paint

| | | | |
|---|---|---|---|
| Project: | Public Spaces | Issue Date: | 07/28/2017 |
| Project #: | ALOFT Hotels G4.0 | Revision Date: | 14 FEB 2019 |

Public Space

| Location | Locations | Qty/Location | Total |
|---|---|---|---|
| BOH Corridor | 0 | 0.00 | 0.00 |
| Chute | 0 | 0.00 | 0.00 |
| Clean | 0 | 0.00 | 0.00 |
| Electrical | 0 | 0.00 | 0.00 |
| Elevator Machine Room | 0 | 0.00 | 0.00 |
| Engineer | 0 | 0.00 | 0.00 |
| Housekeeping (Re:Fresh) | 0 | 0.00 | 0.00 |
| Ice | 0 | 0.00 | 0.00 |
| Janitor | 0 | 0.00 | 0.00 |
| Laundry | 0 | 0.00 | 0.00 |
| Linen | 0 | 0.00 | 0.00 |
| Luggage | 0 | 0.00 | 0.00 |
| Pool Equipment Room | 0 | 0.00 | 0.00 |
| Pool Storage | 0 | 0.00 | 0.00 |
| Stair | 0 | 0.00 | 0.00 |
| Storage | 0 | 0.00 | 0.00 |

Issue Date: 28 JUL 2017

Revision Date: 14 FEB 2019

| | |
|---|---|
| Item Name | Door Paint |
| Description: | Back-of-house door paint and trim |
| Manufacturer: | Benjamin Moore & Co. |
| Color: | Province Blue (2135-40) |
| Product Type: | Paint: Aura Waterborne Interior Paint (2 coats)<br>Primer: N023 Fresh Start Acrylic |
| Finish: | Semi-gloss |
| Lead Time: | Varies per paint supplier |
| Warranty: | Limited Lifetime |
| Eco-Feature(s) *as per manufacturer: | VOC compliant in all regulated areas, anti-microbial, Green Seal GS-11 2010 |

## SPECIAL INSTRUCTIONS

1. Primer, undercoat, block filler, finish coat(s) are to be compatible and of the same manufacturer. All primers and undercoats are to be tinted to 50% lighter than the selected and approved finish coat color. All finish coats are to be tinted 25% darker than the primer coat until approved finish coat color is achieved. When the color schedule calls for the use of DEEP TONES (interior and/or exterior), it is the responsibility of the painting contractor to utilize the appropriate Deep Base
Primers as manufactured by the painting company for use on the substrate for which they are intended.

MANUFACTURER

Benjamin Moore & Co. 866-708-9181

Amy Figueora amy.figueroa@benjaminmoore.com

ALTERNATE MANUFACTURER 1

ALTERNATE MANUFACTURER 2

ALTERNATE MANUFACTURER 3

AREAS

See Area Addendum

# PT-022

Revision 4

Paint

| | | | |
|---|---|---|---|
| Project: | Public Spaces | Issue Date: | 07/28/2017 |
| Project #: | ALOFT Hotels G4.0 | Revision Date: | 14 FEB 2019 |

Public Space

| Location | Locations | Qty/Location | Total |
|---|---|---|---|
| BOH Corridor | 0 | 0.00 | 0.00 |
| Break Room | 0 | 0.00 | 0.00 |
| Chute | 0 | 0.00 | 0.00 |
| Clean | 0 | 0.00 | 0.00 |
| Data Center | 0 | 0.00 | 0.00 |
| Electrical | 0 | 0.00 | 0.00 |
| Elevator Machine Room | 0 | 0.00 | 0.00 |
| Engineer | 0 | 0.00 | 0.00 |
| Food Prep | 0 | 0.00 | 0.00 |
| Food Prep Storage | 0 | 0.00 | 0.00 |
| GM Office | 0 | 0.00 | 0.00 |
| Housekeeping (Re:Fresh) | 0 | 0.00 | 0.00 |
| Ice | 0 | 0.00 | 0.00 |
| Janitor | 0 | 0.00 | 0.00 |
| Laundry | 0 | 0.00 | 0.00 |
| Linen | 0 | 0.00 | 0.00 |
| Luggage | 0 | 0.00 | 0.00 |
| Mechanical | 0 | 0.00 | 0.00 |
| Pool Equipment Room | 0 | 0.00 | 0.00 |
| Pool Storage | 0 | 0.00 | 0.00 |
| Stair | 0 | 0.00 | 0.00 |
| Storage | 0 | 0.00 | 0.00 |
| W XYZ Storage | 0 | 0.00 | 0.00 |
| Work Area | 0 | 0.00 | 0.00 |

Issue Date: 28 JUL 2017

Revision Date: 14 FEB 2019

| | |
|---|---|
| Item Name | Wall Paint |
| Description: | Back-of-house wall paint |
| Manufacturer: | Benjamin Moore & Co. |
| Color: | Patriotic White (2135-70) |
| Product Type: | Paint: Aura Waterborne Interior Paint (2 coats)<br>Primer: N023 Fresh Start Acrylic |
| Finish: | Satin |
| Lead Time: | Varies per paint supplier |
| Warranty: | Limited Lifetime |
| Eco-Feature(s) *as per manufacturer: | VOC compliant in all regulated areas, anti-microbial, Green Seal GS-11 2010 |

## SPECIAL INSTRUCTIONS

1. Primer, undercoat, block filler, finish coat(s) are to be compatible and of the same manufacturer. All primers and undercoats are to be tinted to 50% lighter than the selected and approved finish coat color. All finish coats are to be tinted 25% darker than the primer coat until approved finish coat color is achieved. When the color schedule calls for the use of DEEP TONES (interior and/or exterior), it is the responsibility of the painting contractor to utilize the appropriate Deep Base
Primers as manufactured by the painting company for use on the substrate for which they are intended.

2. Provide level 5 drywall finish prior to application of wall paint.

MANUFACTURER

Benjamin Moore & Co. 866-708-9181

Amy Figueora amy.figueroa@benjaminmoore.com

ALTERNATE MANUFACTURER 1

ALTERNATE MANUFACTURER 2

ALTERNATE MANUFACTURER 3

AREAS

See Area Addendum

# PT-023

Revision 4

Paint

| | | | |
|---|---|---|---|
| Project: | Public Spaces | Issue Date: | 07/28/2017 |
| Project #: | ALOFT Hotels G4.0 | Revision Date: | 14 FEB 2019 |

Public Space

| Location | Locations | Qty/Location | Total |
|---|---|---|---|
| BOH Corridor | 0 | 0.00 | 0.00 |
| Break Room | 0 | 0.00 | 0.00 |
| Chute | 0 | 0.00 | 0.00 |
| Clean | 0 | 0.00 | 0.00 |
| Data Center | 0 | 0.00 | 0.00 |
| Electrical | 0 | 0.00 | 0.00 |
| Elevator Machine Room | 0 | 0.00 | 0.00 |
| Employee Toilet (w/c) | 0 | 0.00 | 0.00 |
| Engineer | 0 | 0.00 | 0.00 |
| Food Prep | 0 | 0.00 | 0.00 |
| Food Prep Storage | 0 | 0.00 | 0.00 |
| GM Office | 0 | 0.00 | 0.00 |
| Housekeeping (Re:Fresh) | 0 | 0.00 | 0.00 |
| Ice | 0 | 0.00 | 0.00 |
| Janitor | 0 | 0.00 | 0.00 |
| Laundry | 0 | 0.00 | 0.00 |
| Linen | 0 | 0.00 | 0.00 |
| Luggage | 0 | 0.00 | 0.00 |
| Mechanical | 0 | 0.00 | 0.00 |
| Pool Equipment Room | 0 | 0.00 | 0.00 |
| Pool Storage | 0 | 0.00 | 0.00 |
| Stair | 0 | 0.00 | 0.00 |
| Storage | 0 | 0.00 | 0.00 |
| W XYZ Storage | 0 | 0.00 | 0.00 |
| Work Area | 0 | 0.00 | 0.00 |

Issue Date: 28 JUL 2017

Revision Date: 14 FEB 2019

| | |
|---|---|
| Item Name | Wall Paint (Accent Wall) |
| Description: | Accent wall paint in General Manager's office |
| Manufacturer: | Benjamin Moore & Co. |
| Color: | Newburyport Blue (HC-155) |
| Product Type: | Paint: Aura Waterborne Interior Paint (2 coats)<br>Primer: N023 Fresh Start Acrylic |
| Finish: | Egg shell |
| Lead Time: | Varies per paint supplier |
| Warranty: | Limited Lifetime |
| Eco-Feature(s) *as per manufacturer: | VOC compliant in all regulated areas, anti-microbial, Green Seal GS-11 2010 |

## SPECIAL INSTRUCTIONS

1. Provide level 5 drywall finish prior to application of wall paint.

2. Primer, undercoat, block filler, finish coat(s) are to be compatible and of the same manufacturer. All primers and undercoats are to be tinted to 50% lighter than the selected and approved finish coat color. All finish coats are to be tinted 25% darker than the primer coat until approved finish coat color is achieved. When the color schedule calls for the use of DEEP TONES (interior and/or exterior), it is the responsibility of the painting contractor to utilize the appropriate Deep Base
Primers as manufactured by the painting company for use on the substrate for which they are intended.

MANUFACTURER

Benjamin Moore & Co. 866-708-9181

Amy Figueora amy.figueroa@benjaminmoore.com

ALTERNATE MANUFACTURER 1

ALTERNATE MANUFACTURER 2

ALTERNATE MANUFACTURER 3

AREAS

Public Space

GM Office

Issue Date: 28 JUL 2017

Revision Date: 14 FEB 2019

| | |
|---|---|
| Item Name | Bulkhead Paint |
| Manufacturer: | Benjamin Moore & Co. |
| Color: | Iron Mountain (2134-30) |
| Product Type: | Paint: Aura Waterborne Interior Paint (2 coats)<br>Primer: N023 Fresh Start Acrylic |
| Finish: | Matte |
| Lead Time: | To be verified |
| Warranty: | Not applicable |
| Eco-Feature(s) *as per manufacturer: | VOC compliant in all regulated areas, anti-microbial, Green Seal GS-11 2010 |

## SPECIAL INSTRUCTIONS

1. Primer, undercoat, block filler, finish coat(s) are to be compatible and of the same manufacturer. All primers and undercoats are to be tinted to 50% lighter than the selected and approved finish coat color. All finish coats are to be tinted 25% darker than the primer coat until approved finish coat color is achieved. When the color schedule calls for the use of DEEP TONES (interior and/or exterior), it is the responsibility of the painting contractor to utilize the appropriate Deep Base
Primers as manufactured by the painting company for use on the substrate for which they are intended.

2. Provide level 5 drywall finish prior to application of wall paint.

MANUFACTURER

Benjamin Moore & Co. 866-708-9181

Amy Figueora amy.figueroa@benjaminmoore.com

ALTERNATE MANUFACTURER 1

ALTERNATE MANUFACTURER 2

ALTERNATE MANUFACTURER 3

AREAS

Public Space

Front Desk (Check-in)

Issue Date: 28 JUL 2017

Revision Date: 14 FEB 2019

| | |
|---|---|
| Item Name | Trellis Paint |
| Description: | Refuel Trellis Paint |
| Manufacturer: | Benjamin Moore & Co. |
| Color: | Oxford White (869) |
| Product Type: | Paint: Aura Waterborne Interior Paint (2 coats)<br>Primer: N023 Fresh Start Acrylic |
| Finish: | Trellis: Satin Finish |
| Lead Time: | Varies per paint supplier |
| Warranty: | Limited Lifetime |
| Eco-Feature(s) *as per manufacturer: | VOC compliant in all regulated areas, anti-microbial, Green Seal GS-11 2010 |

## SPECIAL INSTRUCTIONS

1. Primer, undercoat, block filler, finish coat(s) are to be compatible and of the same manufacturer. All primers and undercoats are to be tinted to 50% lighter than the selected and approved finish coat color. All finish coats are to be tinted 25% darker than the primer coat until approved finish coat color is achieved. When the color schedule calls for the use of DEEP TONES (interior and/or exterior), it is the responsibility of the painting contractor to utilize the appropriate Deep Base
Primers as manufactured by the painting company for use on the substrate for which they are intended.

MANUFACTURER

Benjamin Moore & Co. 866-708-9181

Amy Figueora amy.figueroa@benjaminmoore.com

ALTERNATE MANUFACTURER 1

ALTERNATE MANUFACTURER 2

ALTERNATE MANUFACTURER 3

AREAS

Public Space

Snack Bar (Re:Fuel)

Issue Date: 28 JUL 2017

Revision Date: 14 FEB 2019

| | |
|---|---|
| Item Name | Wall Paint |
| Description: | Refuel Wall Paint |
| Manufacturer: | Benjamin Moore |
| Color: | Oxford White (869) |
| Product Type: | Paint: Aura Waterborne Interior Paint (2 coats)<br>Primer: N023 Fresh Start Acrylic |
| Finish: | Satin |
| Lead Time: | Varies per paint supplier |
| Warranty: | Limited Lifetime |
| Eco-Feature(s) *as per manufacturer: | VOC compliant in all regulated areas, anti-microbial, Green Seal GS-11 2010 |

## SPECIAL INSTRUCTIONS

1. Primer, undercoat, block filler, finish coat(s) are to be compatible and of the same manufacturer. All primers and undercoats are to be tinted to 50% lighter than the selected and approved finish coat color. All finish coats are to be tinted 25% darker than the primer coat until approved finish coat color is achieved. When the color schedule calls for the use of DEEP TONES (interior and/or exterior), it is the responsibility of the painting contractor to utilize the appropriate Deep Base
Primers as manufactured by the painting company for use on the substrate for which they are intended.

2. Provide level 5 drywall finish prior to application of wall paint.

MANUFACTURER

Benjamin Moore & Co. 866-708-9181

Amy Figueora amy.figueroa@benjaminmoore.com

ALTERNATE MANUFACTURER 1

ALTERNATE MANUFACTURER 2

ALTERNATE MANUFACTURER 3

AREAS

Public Space

Snack Bar (Re:Fuel)

Issue Date: 28 JUL 2017

Revision Date: 14 FEB 2019

| | |
|---|---|
| Item Name | Ceiling Paint |
| Description: | Refuel Ceiling Paint |
| Manufacturer: | Benjamin Moore & Co. |
| Color: | Oxford White (869) |
| Product Type: | Paint: Aura Waterborne Interior Paint (2 coats)<br>Primer: N023 Fresh Start Acrylic |
| Finish: | Ceiling: Matte Finish |
| Lead Time: | Varies per paint supplier |
| Warranty: | Limited Lifetime |
| Eco-Feature(s) *as per manufacturer: | VOC compliant in all regulated areas, anti-microbial, Green Seal GS-11 2010 |

## SPECIAL INSTRUCTIONS

1. Primer, undercoat, block filler, finish coat(s) are to be compatible and of the same manufacturer. All primers and undercoats are to be tinted to 50% lighter than the selected and approved finish coat color. All finish coats are to be tinted 25% darker than the primer coat until approved finish coat color is achieved. When the color schedule calls for the use of DEEP TONES (interior and/or exterior), it is the responsibility of the painting contractor to utilize the appropriate Deep Base
Primers as manufactured by the painting company for use on the substrate for which they are intended.

MANUFACTURER

Benjamin Moore & Co. 866-708-9181

Amy Figueora amy.figueroa@benjaminmoore.com

ALTERNATE MANUFACTURER 1

ALTERNATE MANUFACTURER 2

ALTERNATE MANUFACTURER 3

AREAS

Public Space

Snack Bar (Re:Fuel)

Issue Date: 28 JUL 2017

Revision Date: 14 FEB 2019

| | |
|---|---|
| Item Name | Door & Frame Paint |
| Description: | Metallic Paint |
| Manufacturer: | Scuffmaster |
| Color: | EM8008R |
| Product Type: | Envirometal water based paint |
| Finish: | Textured metallic finish (can be brushed or rolled) |
| Lead Time: | Most orders are available to ship within 24 hours |
| Warranty: | Five year limited warranty against manufacturing defect. |
| Eco-Feature(s) *as per manufacturer: | LEED compliant, low-odor application and low-VOC content |

## SPECIAL INSTRUCTIONS

1. Primer, undercoat, block filler, finish coat(s) are to be compatible and of the same manufacturer. All primers and undercoats are to be tinted to 50% lighter than the selected and approved finish coat color. All finish coats are to be tinted 25% darker than the primer coat until approved finish coat color is achieved. When the color schedule calls for the use of DEEP TONES (interior and/or exterior), it is the responsibility of the painting contractor to utilize the appropriate Deep Base
Primers as manufactured by the painting company for use on the substrate for which they are intended.

MANUFACTURER

Wolf Gordon 800-898-0219

Tina Beck-King 516-557-5084 Tina.BeckKing@wolfgordon.com

ALTERNATE MANUFACTURER 1

ALTERNATE MANUFACTURER 2

ALTERNATE MANUFACTURER 3

AREAS

Public Space

Lobby (Re:Mix)

Issue Date: 14 FEB 2019

Revision Date:

| | |
|---|---|
| Item Name | Ceiling & Duct Work Paint |
| Manufacturer: | Benjamin Moore |
| Color: | Kendall Charcoal |
| Product Type: | Paint: Aura Waterborne Interior Paint (2 coats)<br>Primer: N023 Fresh Start Acrylic |
| Finish: | Matte |
| Lead Time: | Varies per paint supplier |
| Warranty: | Limited Lifetime |
| Eco-Feature(s) *as per manufacturer: | VOC compliant in all regulated areas, anti-microbial, Green Seal GS-11 2010 |

## SPECIAL INSTRUCTIONS

1. Primer, undercoat, block filler, finish coat(s) are to be compatible and of the same manufacturer. All primers and undercoats are to be tinted to 50% lighter than the selected and approved finish coat color. All finish coats are to be tinted 25% darker than the primer coat until approved finish coat color is achieved. When the color schedule calls for the use of DEEP TONES (interior and/or exterior), it is the responsibility of the painting contractor to utilize the appropriate Deep Base
Primers as manufactured by the painting company for use on the substrate for which they are intended.

MANUFACTURER

Benjamin Moore & Co. 866-708-9181

Amy Figueora amy.figueroa@benjaminmoore.com

ALTERNATE MANUFACTURER 1

ALTERNATE MANUFACTURER 2

ALTERNATE MANUFACTURER 3

AREAS

Public Space

Fitness Center (Re:Charge)

Meeting (Tactic)

# PT-033

Paint

Issue Date: 14 FEB 2019

Revision Date:

| | |
|---|---|
| Item Name | Listening Room Ceiling Paint |
| Manufacturer: | Benjamin Moore |
| Color: | Georgia Pink (2092-60) |
| Product Type: | Paint: Aura Waterborne Interior Paint (2 coats)<br>Primer: N023 Fresh Start Acrylic |
| Finish: | Eggshell |
| Lead Time: | Varies per paint supplier |
| Warranty: | Limited Lifetime |
| Eco-Feature(s) *as per manufacturer: | VOC compliant in all regulated areas, anti-microbial, Green Seal GS-11 2010 |

## SPECIAL INSTRUCTIONS

1. Primer, undercoat, block filler, finish coat(s) are to be compatible and of the same manufacturer. All primers and undercoats are to be tinted to 50% lighter than the selected and approved finish coat color. All finish coats are to be tinted 25% darker than the primer coat until approved finish coat color is achieved. When the color schedule calls for the use of DEEP TONES (interior and/or exterior), it is the responsibility of the painting contractor to utilize the appropriate Deep Base
Primers as manufactured by the painting company for use on the substrate for which they are intended.

MANUFACTURER

Benjamin Moore & Co. 866-708-9181

Amy Figueora amy.figueroa@benjaminmoore.com

ALTERNATE MANUFACTURER 1

ALTERNATE MANUFACTURER 2

ALTERNATE MANUFACTURER 3

AREAS

Public Space

Meeting (Tactic)

Issue Date: 14 FEB 2019

Revision Date:

| | |
|---|---|
| Item Name | Door Paint |
| Description: | Paint at Restroom Doors to match Benjamin Moore Color |
| Manufacturer: | Wolf Gordon |
| Color: | Custom Paint Color to Match Benjamin Moore Color Kendall Charcoal |
| Product Type: | Waterbased polyurethane acrylic |
| Finish: | Scrubtough |
| Lead Time: | Most orders are available to ship within 24 hours |
| Warranty: | Five year limited warranty against manufacturing defect |
| Eco-Feature(s) *as per manufacturer: | VOC content, Free of APEO and formaldehyde |

## SPECIAL INSTRUCTIONS

1. Primer, undercoat, block filler, finish coat(s) are to be compatible and of the same manufacturer. All primers and undercoats are to be tinted to 50% lighter than the selected and approved finish coat color. All finish coats are to be tinted 25% darker than the primer coat until approved finish coat color is achieved. When the color schedule calls for the use of DEEP TONES (interior and/or exterior), it is the responsibility of the painting contractor to utilize the appropriate Deep Base
Primers as manufactured by the painting company for use on the substrate for which they are intended.

MANUFACTURER

| | | |
|---|---|---|
| Wolf Gordon | 800-898-0219 | |
| Susan Lynch | 804-347-0550 /801 | susan.lynch@wolfgordon.com |

ALTERNATE MANUFACTURER 1

ALTERNATE MANUFACTURER 2

ALTERNATE MANUFACTURER 3

AREAS

Public Space

Pool (Splash) Restroom (w/c)

Issue Date: 14 FEB 2019

Revision Date:

| | |
|---|---|
| Item Name | Column Paint |
| Manufacturer: | Benjamin Moore |
| Color: | Kendall Charcoal |
| Product Type: | Paint: Aura Waterborne Interior Paint (2 coats)<br>Primer: N023 Fresh Start Acrylic |
| Finish: | Eggshell |
| Lead Time: | Varies per paint supplier |
| Warranty: | Limited Lifetime |
| Eco-Feature(s) *as per manufacturer: | VOC compliant in all regulated areas, anti-microbial, Green Seal GS-11 2010 |

## SPECIAL INSTRUCTIONS

1. Primer, undercoat, block filler, finish coat(s) are to be compatible and of the same manufacturer. All primers and undercoats are to be tinted to 50% lighter than the selected and approved finish coat color. All finish coats are to be tinted 25% darker than the primer coat until approved finish coat color is achieved. When the color schedule calls for the use of DEEP TONES (interior and/or exterior), it is the responsibility of the painting contractor to utilize the appropriate Deep Base
Primers as manufactured by the painting company for use on the substrate for which they are intended.

2. Provide level 5 drywall finish prior to application of wall paint.

MANUFACTURER

Concrete Wall Finish 450-651-1929

Catherine Berube cberube@waxine.com

ALTERNATE MANUFACTURER 1

ALTERNATE MANUFACTURER 2

ALTERNATE MANUFACTURER 3

AREAS

Public Space

Meeting (Tactic)

Issue Date: 14 FEB 2019

Revision Date:

| | |
|---|---|
| Item Name | Wall Paint |
| Description: | Splash wall paint |
| Manufacturer: | Benjamin Moore & Co. |
| Color: | Tear Drop 2060-70 |
| Product Type: | Paint: BM Aura Waterborne Interior Paint (2 coats)<br>Primer: N023 Fresh Start Acrylic |
| Finish: | Satin |
| Lead Time: | Varies per paint supplier |
| Warranty: | Limited Lifetime |
| Eco-Feature(s) *as per manufacturer: | VOC compliant in all regulated areas, anti-microbial, Green Seal GS-11 2010 |

## SPECIAL INSTRUCTIONS

1. Interior Paint - General Notes

Primer, undercoat, block filler, finish coat(s) are to be compatible and of the same manufacturer. All primers and undercoats are to be tinted to 50% lighter than the selected and approved finish coat color. All finish coats are to be tinted 25% darker than the primer coat until approved finish coat color is achieved. When the color calls for the use of DEEP TONES (interior and/or exterior), it is the responsibility of the painting contractor to utilize the appropriate Deep Base Primers as manufactured by the painting company for use on the substrate for which they are intended.

MANUFACTURER

Benjamin Moore & Co. 866-708-9181

Amy Figueora amy.figueroa@benjaminmoore.com

ALTERNATE MANUFACTURER 1

ALTERNATE MANUFACTURER 2

ALTERNATE MANUFACTURER 3

AREAS

Public Space

Indoor Pool (Splash)

Paint Cutsheets

Benjamin Moore®

# AURA®

## WATERBORNE INTERIOR PAINT
## SATIN FINISH 526

PT-009, PT-011, PT-013, PT-014, PT-016, PT-023, PT-027, PT-028

Revision Date:

## Features

- Extreme hide for fewer coats
- Color Lock® Technology, no color rub-off
- Provides a mildew resistant coating
- Zero VOC, low odor
- Easy application
- Self priming
- Stains wash off easily
- Excellent touch up
- Easy clean up

## General Description

Aura® Satin Finish is part of an innovative paint and colorant system integrating the best technologies to deliver superior durability for any color along with the promise of long lasting beauty. In addition to using 100% acrylic latex, proprietary resins have been incorporated to give the product its extraordinary performance properties.

## Recommended For

New or previously painted wallboard, plaster, masonry and wood; primed or previously painted metal; new or coated acoustic ceilings. It is ideal for surfaces where maximum durability is required and lasting color is desired

## Limitations

- Do not apply when air and surface temperatures are below 50°F (10°C)
- Only Gennex® Waterborne Colorants can be added to Aura® Paint

## Product Information

### Colors: —Standard:

White (01)

### —Tint Bases:

Benjamin Moore® Gennex® Bases 1X, 2X, 3X, & 4X

### —Special Colors:

Contact your Benjamin Moore representative.

### Certification:

**VOC compliant in all regulated areas**

Zero VOC according to EPA Method 24

Master Painters Institute MPI # 43, 43 X-Green, 140, 140 X-Green

Class A (0-25) over non-combustible surfaces in accordance with ASTM E-84

**Anti-microbial** - This product contains agents which inhibit the growth of microbes on the surface of this paint film. This product contains antimicrobial additives that inhibit the growth of mold and mildew on the surface of the paint film.

Benjamin Moore's green promise®

COLLABORATIVE FOR HIGH PERFORMANCE SCHOOLS. CHPS

Benjamin Moore's Green Promise® designation is our company's assurance that this product meets – and often exceeds– rigorous environmental and performance criteria regarding VOCs, emissions, application, washability, scrubbability and packaging, while also delivering the premium levels of performance you expect from Benjamin Moore.

| LEED® v4 | CHPS (Collaborative for High Performance Schools) | MPI Green Performance™ | VOC (in any color) |
|---|---|---|---|
| YES | YES | YES | 0 g/L |

This Benjamin Moore product has been tested by independent third parties and meets or exceeds the published chemical restriction and performance criteria included in the standard shown below.

Green Seal™ GS-11 2010

### Technical Assistance:

Available through your local authorized independent Benjamin Moore retailer. For the location of the retailer nearest you, call 1-800-826-2623, see www.benjaminmoore.com, or consult your local Yellow Pages.

| Technical Data◊ | | Pastel Base |
|---|---|---|
| Vehicle Type | | Acrylic & Proprietary Resins |
| Pigment Type | | Titanium Dioxide |
| Volume Solids | | 42% |
| Coverage per Gallon at Recommended Film Thickness | | 350 – 400 Sq. Ft. |
| Recommended Film Thickness | – Wet | 4.3 mils |
| | – Dry | 1.8 mils |
| Depending on surface texture and porosity. Be sure to estimate the right amount of paint for the job. This will ensure color uniformity and minimize the disposal of excess paint. | | |
| Dry Time @ 77°F (25°C) @ 50% RH | – To Touch | 1 Hour |
| | – To Recoat | 1 Hour |
| Painted surfaces can be washed after two weeks. High humidity and cool temperatures will result in longer dry, recoat and service times. | | |
| Dries By | | Evaporation, Coalescence |
| Viscosity | | 100 ± 3 KU |
| Flash Point | | None |
| Gloss / Sheen | | Satin (28 - 38 @ 60°) |
| Surface Temperature at Application | – Min. | 50°F |
| | – Max. | 90°F |
| Thin With | | See Chart |
| Clean Up Thinner | | Clean Water |
| Weight Per Gallon | | 11.3 lbs |
| Storage Temperature | – Min. | 40°F |
| | – Max. | 90°F |

**Volatile Organic Compounds (VOC)**

0g/L

Zero VOC post tint (any base and any color)

◊Reported values are for Pastel Base. Contact Benjamin Moore for values of other bases or colors.

## Surface Preparation

Surfaces to be painted must be clean, dry, and free of dirt, dust, grease, oil, soap, wax, scaling paint, water soluble materials and mildew. Remove any peeling or scaling paint, and sand these areas to feather edges smooth with adjacent surfaces. Glossy areas should be dulled. Drywall surfaces must be free of sanding dust. Spot prime with Aura® Satin Finish Paint before and after filling nail holes, cracks, and other surface imperfections.

New plaster or masonry surfaces must be allowed to cure (30 days) before applying base coat. Cured plaster should be hard, have a slight sheen and maximum pH of 10; soft, porous or powdery plaster indicates improper cure. Never sand a plaster surface; knife off any protrusions and prime plaster before and after applying patching compound. Poured or pre-cast concrete with a very smooth surface should be etched or abraded to promote adhesion, after removing all form release agents and curing compounds. Remove any powder or loose particles.

**Difficult Substrates:** Benjamin Moore offers a variety of specialty primers for use over difficult substrates such as plaster, bleeding woods, grease stains, crayon markings, hard glossy surfaces, galvanized metal or other substrates where paint adhesion or stain suppression is a particular problem. Your Benjamin Moore® retailer can recommend the right problem-solving primer for your special needs.

**WARNING!** If you scrape, sand, or remove old paint, you may release lead dust. **LEAD IS TOXIC. EXPOSURE TO LEAD DUST CAN CAUSE SERIOUS ILLNESS, SUCH AS BRAIN DAMAGE, ESPECIALLY IN CHILDREN. PREGNANT WOMEN SHOULD ALSO AVOID EXPOSURE**. Wear a NIOSH approved respirator to control lead exposure. Clean up carefully with a HEPA vacuum and a wet mop. Carefully clean up with a HEPA vacuum and a wet mop. Before you start, find out how to protect yourself and your family by contacting the National Lead Information Hotline at 1-800-424-LEAD or log on to www.epa.gov/lead

## Primer/Finish Systems

Aura® Satin Finish is self priming on most surfaces. Aura® will act as its own primer, providing the optimal foundation for the subsequent finish coat. On bare substrates two coats are required; previously painted surfaces can be finished with 1 or 2 coats. **Special Note:** For certain deep colors, Aura® Color Foundation must be used to achieve maximum hide and the desired topcoat color. Consult your retailer.

**Wood and Engineered Wood Products:**
**Primer:** Fresh Start® Multi-Purpose Latex Primer (023) or Fresh Start® High-Hiding All Purpose Primer (046)
**Finish:** 1 or 2 coats Aura® Satin Finish

**Bleeding woods such as cedar and redwood:**
**Primer:** Fresh Start® High-Hiding All Purpose Primer (046) or Fresh Start® Multi-Purpose Oil Based Primer (024)

**Plaster/Wallboard:**
**Primer/Finish**: 1 or 2 coats of Aura® Satin Finish.

**Rough or Pitted Masonry:**
**Primer:** Ultra Spec® Masonry Interior/Exterior Hi-Build Block Filler (571)
**Finish:** 1 or 2 coats of Aura® Satin Finish.

**Smooth Poured or Precast Concrete:**
**Primer/Finish**: 1 or 2 coats of Aura® Satin Finish.

**Ferrous Metal (Steel & Iron):**
**Primer:** Ultra Spec® HP Acrylic Metal Primer (HP04) or Super Spec HP® Alkyd Metal Primer (P06)
**Finish:** 1 or 2 coats of Aura® Satin Finish.

**Non-Ferrous Metal (galvanized & aluminum)**
All new metal surfaces must be thoroughly cleaned with Oil & Grease Emulsifier Corotech® V600 to remove contaminants. New shiny non-ferrous metal surfaces that will be subject to abrasion should be dulled with very fine sandpaper or a synthetic steel wool pad to promote adhesion.
**Primer:** Not required on properly prepared surfaces
**Finish:** 1 or 2 coats of Aura® Satin Finish.

**Repaint, All Substrates:** Prime bare areas with the primer / finish recommended for the substrate above.

## Application

Mixing of Paint: Stir thoroughly before and during use.

Use the same brushing techniques as you would for any low-VOC interior coating. Benjamin Moore recommends an extra firm nylon polyester brush for best results.

Aura® offers excellent flow and leveling. Do not over brush in the attempt to smooth out brush marks.

We recommend the Benjamin Moore® Aura® shed-resistant, 3/8" nap roller cover for best results. Aura® dries faster than other acrylic paints, so avoid lap marks by maintaining a wet edge. Roll out vertical sections in 3' to 4' widths.

If your edge begins to dry or you see that you missed a spot and the paint is already setting up, allow it to dry completely before touching up that area.

This product can also be sprayed; refer to the chart below for spray recommendations.

## Thinning/Clean Up

**Conditioning with Benjamin Moore® 518 Extender may be necessary under certain conditions to adjust open time or spray characteristics. The chart below is for general guidance**

| | **Mild conditions** | **Severe conditions** |
|---|---|---|
| | Humid (RH> 50%) with no direct sunlight & with little to no wind | Dry (RH<50%), in direct sunlight, or windy conditions |
| **Brush:** Nylon / Polyester | No thinning necessary | Add **518 Extender** or **water:** Max of 8 fl. oz. to a gallon of paint **Never add other paints or solvents.** |
| **Roller:** 3/8' Aura® Roller Cover | | |
| **Spray:** Airless Pressure: 1000 - 2000 psi Tip: 0.013-0.017 | | |

**Clean up:** Wash painting tools in warm soapy water immediately after use. Spray equipment should be given a final rinse with mineral spirits to prevent rusting.

**USE COMPLETELY OR DISPOSE OF PROPERLY.** Dry, empty containers may be recycled in a can recycling program. **Local disposal requirements vary; consult your sanitation department or state-designated environmental agency on disposal options.**

## Environmental Health & Safety Information

**Use only with adequate ventilation.** Do not breathe spray mist or sanding dust. Ensure fresh air entry during application and drying. Avoid contact with eyes and prolonged or repeated contact with skin. May cause allergic skin reaction. Avoid exposure to dust and spray mist by wearing a NIOSH approved respirator during application, sanding and clean up. Follow respirator manufacturer's directions for respirator use. Close container after each use. Wash thoroughly after handling.

**WARNING:** This product contains a chemical known to the state of California to cause cancer and birth defects, or other reproductive harm.

**FIRST AID:** In case of eye contact, flush immediately with plenty of water for at least 15 minutes; for skin, wash thoroughly with soap and water. If symptoms persist, seek medical attention. If you experience difficulty breathing, leave the area to obtain fresh air. If continued difficulty is experienced, get medical attention immediately.

**IN CASE OF SPILL** – Absorb with inert material and dispose of as specified under **Thinning/Clean up.**

**KEEP OUT OF REACH OF CHILDREN**
**PROTECT FROM FREEZING**

**Refer to Safety Data Sheet for additional health and safety information.**

Benjamin Moore & Co., 101 Paragon Drive, Montvale, NJ 07645 Tel: (201) 573-9600 Fax: (201) 573-9046 www.benjaminmoore.com M72 526 US 040617
Aura, Benjamin Moore, Color Lock, Fresh Start, Gennex, Green Promise, Super Spec HP, Ultra Spec and the triangle "M" symbol are registered trademarks, licensed to Benjamin Moore & Co. This product is not endorsed by or a division of CHPS. This product is provided by Benjamin Moore, not CHPS. All other trademarks belong to their respective owners. ©2015, 2017 Benjamin Moore & Co. All rights reserved

CONTEGO INTERNATIONAL, INC.

PT-010

Revision Date:

# PRODUCT DATA SHEET

# Contego *High Solids* Reactive Fire Barrier Intumescent (RFB)

Approved No. CF 5303

**General Description:** Contego HS RFB is a full-bodied water-based acrylic latex, single component coating designed to protect a wide range of building materials including structural steel, aluminum, dimensional lumber, manufactured wood products, trusses, drywall, spray polyurethane foam insulation, HDPE wall panels, concrete, plaster, solid core doors and more. The product may also be used for conduit, decking and cladding. Refer to our architectural specification for more details.

## Technical Data:

| | |
|---|---|
| Color | White |
| Specific Gravity | 1.35 +/- 0.05 |
| pH Range | 8.0 - 8.5 |
| Weight/Gal | 11.5 +/- 0.2 lbs (5.2 Kgs)* |
| Hazardous Ingredients | N/A |
| Volume Solids | 67.0 - 69.0% |
| Weight Solids | 68.0 - 72.0% |
| Viscosity | 20 - 25,000 cPs |
| Flammability | Not Flammable |
| VOC. (less Water) | .01 gm/L (Nil) |

*Does not include weight of packaging.

**Application Conditions:** Contego HS RFB is designed to be applied by spray application. For application using a brush or roller, use Contego Orginal Formula. Contego HS RFB should not be applied when the relative humidity exceeds 80% or the surface to be coated is less than 50°F (10°C) or less than 15°F (9°C) above the current or forecasted dew point. The product is best applied when ambient temperatures are between 50°F (10°C) and 95°F (35°C). Once applied and cured, lower or higher temperatures can be tolerated. On structural steel and other metals such as aluminum, copper, brass, or composites, - a primer is *always* required. On combustible substrates such as dimensional lumber, manufactured wood (Oriented Strand Board, Particle Board, Plywood, etc.), Polyurethane foam, and drywall (GWB) a primer is not required but may be useful if:

**Dimensional Lumber** The wood is very old and/or dry and would likely absorb too much of the Contego coating.
**Manufactured Wood** The substrate is very old and/or dry or if the resin content is unusually high.
**Polyurethane Foam** The foam is soy-based or made from other organics that emit a vegetable oil.
**Drywall (GWB)** The drywall has been previously painted with oil-based (alkyd) paint or if you're not sure.

Consult your Contego representative for specific information regarding the brand, and types of acceptable primers to be used under Contego HS RFB. **SEE Application Instructions at www.contegointernational.com.**

**Drying & Cure Times at Standard Ambient Temperature and Humidity:** As with any water-based acrylic latex coating, drying time is always a function of ambient temperature, ambient humidity and coating thickness. At 60°F (15°C) with a relative humidity of 70%, a 20 mil (500µ) wet film thickness coat should be dry to touch within 3 hours, completely dry in 6 hours and dried hard enough to handle in 8 hours. While our specifications call for a 72 hour cure time, the product is active as soon as it is hard dried.

DO NOT apply additional coats until you are sure the underlying coats are completely dry. Applying additional coats on top of product that still has moisture may cause the finish to crack and, if enough moisture is trapped under a surface film, blistering and delamination can occur. A top coat is recommended and permitted after the total amount of required thickness of Contego HS RFB has been applied and completely dried. **SEE Drying and Cure Times at www.contegointernational.com.**

## Contego HS RFB Product Advantages:

*Contego is Truly Non-Toxic!*

WHITE IS THE NEW GREEN

- ***Exceptional protection from heat and fire.***
- ***Smooth, thin, architectural grade finish.***
- ***Top coat with a wide range of paints including alkyds, acrylics, water-based epoxy or polyurethane.***
- ***Contego HS RFB commonly requires perhaps half the coating thickness and fewer coats to provide protection equal to or better than the competition. That means HUGE savings!***
- ***Nontoxic, nondermatic and noncarcinogenic acrylic latex.***
- ***Can be pre-applied to steel and other materials during fabrication and is easy to repair.***
- ***Designed specifically for sprayer application. No special equipment is required.***
- ***Any qualified contractor can apply it.***
- ***Interior or exterior application (use an exterior grade top coat for exterior applications).***
- ***Economically priced.***
- ***Fast drying and fast curing times.***
- ***Cleans up with soap and water.***
- ***The longest shelf life in the industry. Does not need to be periodically reapplied.***

HIGH SOLIDS

# Contego *High Solids* Reactive Fire Barrier Intumescent (RFB)

**Required Coating Thickness:** Current recommendations are a maximum wet film thickness of 40 mils (1000µ), drying to 28 mils (710µ) - refer to the Contego HS RFB Application Guide. **For structural steel applications,** refer to our Project Planner to determine required thickness for various substrates, densities and required ratings. Contact a qualified Contego representative with further questions.

## General Guidelines for Coating Thickness Requirements:

**Dimensional Lumber -** Up to 2 hours depending on the size of the wood and the thickness of Contego HS RFB applied. (20 mils/500µ dft)
**Manufactured Wood -** Up to 2 hours depending on the size of the wood and the thickness of Contego HS RFB applied. (20 mils/500µ dft)
**Polyurethane Foam -** Meets or exceeds the 15 minute thermal barrier requirements of IBC-2603 using UL-1715 (20 mils/500µ dft). (Under EN-13823, Contego exceeded 25 minutes with no change after 6 minutes).
**Drywall (GWB) -** Contego HS RFB adds 1 hour to any type of GWB. (15 mils/380µ dft)
**Structural Steel -** Contego HS RFB provides up to 3 hours restrained protection depending on the W/D, Hp/A or A/P of the steel and the thickness of Contego HS RFB applied. (8-200 mils/200-5000µ dft) - refer to our steel calculator.
**Aluminum** Columns have been tested for 2 hours. Aviation grade .025 panels for an estimated 4+ hours. (20-50 mils/500-1270µ dft)

## Precautions:

- Do not mix, thin or dilute the Contego HS RFB product with water or other materials.
- Do not allow the product to freeze. If frozen, the texture will be obviously different. Discard it.
- Do not store at temperatures above 105°F (40°C) for extended periods of time.
- Do not expose the product to rain, snow, dew or extreme humidity until a top coat is applied.

**Warranty:** Contego products are warranted for ten years from date of application against material defects. Proof of purchase (store receipt and bar code from container) is required for warranty claims. Claims are limited to replacement of product only. The manufacturer accepts no responsibility for other losses or claims and the user waives such claims by breaking the seal on the container.

**Testing:** Contego products are tested to a variety of standards including UL, ULc, EN, BS, ASTM, NFPA, UBC, CEN, ISO, and others by the best independent fire testing laboratories available. Contego uses Underwriters Laboratories (UL), Exova/Warrington, Intertek, Western Fire Center, Southwest Research Institute (SwRI), Guardian Laboratories, SGS/US Testing, KTA-Tator, Materials Analytical Services, MAGI and more. All labs are certified, accredited and audited. **Test results are available online at www.contegointernational.com** or can be obtained on DVD by contacting our customer services department or your local representative.

## Contact:

**Contego International, Inc. (USA/Canada)**
**Tony Scott**
**Director N. America Operations**
**800-434-6444 Toll Free in the USA**
**317-580-0665 – Office**
**317-580-0663 – Fax**
**Info@contegointernational.com**

**Contego International, Inc. (International)**
**John M. Schwartz**
**Dir., International Operations**
**317-966-2189 - Pacific**
**john@contegointernational.com**

**Todd Beehler (Finance, Accounting)**
**Chief Financial Officer**
**1013 Arthur St./ PO Box 49**
**Rochester, IN 46975-2449**
**317-379-2843 - Direct**
**574-223-4442 - Fax**
**todd@contegointernational.com**

**International Partners:**
**http://www.contegointernational.com/international_distributors.html**
**www.contegointernational.com**
**http://www.facebook.com/pages/Contego/167681133258008 - Facebook**
**http://www.youtube.com/ContegoFireBarrier - YouTube**
**http://www.twitter.com/contegopaint - Twitter**

| PT-010 |
| --- |
| Revision Date: |

SECTION 09960

INTUMESCENT COATINGS for STRUCTURAL STEEL APPLICATIONS
(Contego HS and Original Formula)
(Edit points in red)

*Copyright 2010 - 2011 Contego International, Inc. - All rights reserved*

**** NOTE TO SPECIFIER ** Contego International; intumescent coatings.**
**This section is based on the products of Contego International, which is located at:**
**334 W. Greyhound Pass**
**Carmel, IN 46032**
**Toll Free: 800-434-6444**
**Phone: 317-580-0665**
**Email: info@contegointernational.com**
**Web: www.ContegoFireBarrier.com**
**Contego is Latin for "to shield, defend, or protect". That is also the mission of our group. Today, Contego affiliates around the world offer solutions to the commercial and industrial sector as well as consumers. Structures and materials treated with Contego Fire Barrier Latex offer a level of security and safety that can be measured in lives saved and property losses that are averted.**
**Contego was formed in 2000 for the express purpose of seeking out the best fire prevention products available and expanding their use through refinement, education and exposure.**
**Our goal is to make the world a safer place. Our Fire Barrier Latex is formulated to deliver important benefits at a significantly lower cost per square foot applied. Thank you for taking the time to learn more about Contego International and looking for ways to be a part of our worldwide family.**

PART 1 PRODUCTS

1.1 SECTION INCLUDES

A. Intumescent coatings.

1.2 RELATED SECTIONS

**** NOTE TO SPECIFIER ** Delete any sections below not relevant to this project; add others as required.**

A. Section 05120: Structural steel and framing with reference to primer receiving fire protection materials.

B. Section 09900 - Paints and Coatings: Field painting not specified in this Section.

1.3 REFERENCES

A. ANSI A2.1 - Standard Test Method for Fire Tests of Building Construction and Materials.

B. ASTM International:

1. ASTM D 1475 - Standard Test Method For Density of Paint, Varnish, Lacquer, and Related Products.

2. ASTM D 2369 - Standard Test Method For Volatile Content of Coatings.

3. ASTM D 3359 - Standard Methods for Measuring Adhesion by Tape Test (Methods A and B)

4. ASTM D 3960 - Standard Practice for Determining Volatile Organic Compound (VOC) Content of Paints and Related Coatings.

5. ASTM D 4017 - "Standard Test Method for Water in Paints and Paint Materials by Karl Fischer Method.

6. ASTM E 84 - Standard Test Method for Surface Burning Characteristics of Building Materials.

7. ASTM E 119 - Standard Test Methods for Fire Tests of Building Construction and Materials.

8. ASTM E 283 - Standard Test Method for Determining Rate of Air Leakage Through Exterior Windows, Curtain Walls, and Doors Under Specified Pressure Differences Across the Specimen.

9. ASTM E 662 - Standard Guide for Measurement of Gases Present or Generated During Fires.

C. AZ/NZS 1425:2007 - Western Australia DOC Test for LPG Storage Containers.

D. BSS 476 - Standard Test Method for Fire Tests of Building Construction and Materials.

E. BSS 7239 - Test Method for Toxic Gas Generation by Materials on Combustion.

F. UBC 8.1 - Standard Test Method for Surface Burning Characteristics of Building Materials.

G. DIN 4102, Part 8 - Standard Test Method for Fire Tests of Building Construction and Materials.

H. National Fire Protection Association (NFPA):

1. NFPA 251 - Standard Test Method for Fire Tests of Building Construction and Materials.

2. NFPA 255 - Standard Test Method for Surface Burning Characteristics of Building Materials.

3. NFPA 286 - Standard Methods of Fire Tests for Evaluating Contribution of Wall and Ceiling Interior Finish to Room.

I. UL 263 - Fire Tests of Building Construction and Materials.

J. UL 723 - Test for Surface Burning Characteristics of Building Materials.

K. UL-C-S101 - Standard Test Method for Fire Tests of Building Construction and Materials.

L. Uniform Building Code (UBC):

1. UBC 7-1 - Standard Test Method for Fire Tests of Building Construction and Materials.

2. UBC 26-2, Test Method for Evaluation of Thermal Barriers.

3. UBC 26-3, Room Fire Test Standard for interior of foam plastic systems met all criteria.

1.4 SUBMITTALS

A. Submit under provisions of Section 01300.

B. Product Data: Manufacturer's data sheets on each product to be used.
1. Preparation instructions and recommendations.
2. Storage and handling requirements and recommendations.
3. Installation methods.

C. Verification Samples: For each finished product specified, two samples, minimum size 6 inches (150 mm) square, representing actual product and finish.

1.5 DELIVERY, STORAGE, AND HANDLING

A. Deliver and store all materials in manufacturer's unopened, labeled packaging until ready for installation.

B. Store above 65 degrees F (18 degrees C) for 48 hours prior to application.

1.6 PROJECT CONDITIONS

A. Maintain environmental conditions (temperature, humidity, and ventilation) within limits recommended by manufacturer for optimum results. Do not install products under environmental conditions outside manufacturer's absolute limits.

B. Do not expose applied product to rain, dew, snow, heavy fog, condensation or other forms of accumulated moisture or precipitation before having dried completely and a top coat of acrylic enamel, designed for the ambient environment, has been applied and allowed to dry.

PART 2 PRODUCTS

2.1 MANUFACTURERS

A. Acceptable Manufacturer: Contego International, Carmel, IN 46032; Toll Free Tel: 800-434-6444; Tel: 317-580-0665; Email: request info (info@contegointernational.com)

**** NOTE TO SPECIFIER ** Delete one of the following two paragraphs; coordinate with requirements of Division 1 section on product options and substitutions.**

B. Substitutions: Not permitted.

C. Requests for substitutions will be considered in accordance with provisions of Section 01600.

**** NOTE TO SPECIFIER ** Contego Passive Fire Barrier is a heavy-bodied, single-part latex designed for use on construction materials such as Oriented Strand Board (OSB), Structural Insulated Panels (SIPS), framing lumber, plywood, trusses, drywall, doors, and more. May also be used on aluminum and steel sheets, and structural steel including round and box steel columns.**

2.2 MATERIALS

A. Contego Passive Fire Barrier Intumescent Latex Paint: As manufactured by Contego International.
1. Color: White.
2. VOC (Less Water): 0 Grams/Litre.
3. Weight/US Gallon: 10.8 lbs. (11.2 for HS Version)
4. Hazardous Ingredient: N/A.
5. WHMIS Class: Not Controlled.
6. Flammability: Not Flammable.
7. Weight Solids: 52.93 percent. (62.45 for HS Version)
8. Volume Solids: 43.7 percent. (68.3% for HS Version)
9. Specific Gravity: 1.29. (1.67 for HS Version)
10. pH Range: 8.0-8.5.

**** NOTE TO SPECIFIER ** Refer to manufacturer's website for additional test results on a wide range of materials.**

B. Testing Compliance:
1. ANSI/UL723 Class A Doug Fir. (a=10 minutes, b=Extended to 30 minutes)
a. Results: Average Flame spread Index 0; Smoke Index 0, Class A.
b. Results: Average Flame spread Index 0; Smoke Index 5, Class A.

2. ASTM E 119/UL-263/UBC 7.1, ANSI A2.1/ULC-S01/NFPA 251:
a. Results: Ranged from 103 to 121 minutes. STEEL "I" Beams Unrestrained.

b. Steel Plate: ASTM 119 UL-263 ON .250 Plate 73 mil coating of Contego achieved 126 minutes (1000 degrees F, 538 degrees C unexposed surface) Unrestrained.

c. Steel Beams and Decking With 4 Inches Concrete: ASTM 119 UL-263 with 58 mil coating of Contego achieved 87 minutes (1100 degrees F, 593 degrees C unexposed surface) Unrestrained, 174 minutes Restrained.

d. 0.500 Steel Plate: ASTM E 119/UL-263/UBC 7.1, ANSI A2.1/ ULC-S01/NFPA 251 Top Coated with 60 mils and Acrylic Enamel. The thermocouples exceeded an average of 1,200 degrees F (649 degrees C) at 2:21.50 proving that top coating adds 25% to 32% to the total fire resistance.

3. NFPA 286, Standard Methods of Fire Tests for Evaluating Contribution of Wall and Ceiling Interior Finish to Room. Met all criteria.

PART 3 EXECUTION

3.1 EXAMINATION AND PREPARATION

A. If preparation is the responsibility of another installer, notify Architect of deviations from manufacturer's recommended installation tolerances and conditions.

B. Do not proceed with installation until substrates have been properly prepared and deviations from manufacturer's recommended tolerances are corrected. Prepare surfaces using the methods recommended by the manufacturer for achieving the best result for the substrate under the project conditions. Surfaces must be clean, dry, and free of any grease, oils or other contaminants. Previous layers of paint must be solidly adhered to the surface

with no flaking, chipping, or cracks.

1. Remove hardware, hardware accessories, plates, machined surfaces, lighting fixtures, and similar items already installed that are not to be painted. If removal is impractical or impossible because of size or weight of item, provide surface-applied protection before surface preparation and painting.

2. After completing painting operations in each space or area, reinstall items removed using workers skilled in the trades involved.

3. Cleaning: Before applying coatings or other surface treatments, clean substrates of substances that could impair bond of intumescent paint systems.

4. Schedule cleaning and painting application so dust and other contaminants will not fall on wet, newly painted surfaces.

5. Surface Preparation: Clean and prepare surfaces to be painted according to manufacturer's written instructions for each particular substrate condition and as specified. Coordinating shop-applied primers with finish coats is critical. If compatibility problems develop, it may be necessary to provide barrier coats over shop-applied primers or to remove primer and reprime substrate.

C. Commencement of installation constitutes acceptance of conditions.

3.2 INSTALLATION

A. Installation General: Install in accordance with Manufacturer's printed instructions.

1. Product must be mixed thoroughly before application. Manufacturer recommends using a mixing paddle with power drill for a minimum of three 3 minutes at highest speed. Concentrate on bottom of bucket periodically moving to the middle and top areas.

2. Product is properly mixed when:

   a. There are no solids attached to the paddle after mixing at the bottom.
   b. Paint shows a uniform consistency when mixed at the surface.

3. Do not dilute or thin this product with any other liquid.

B. Priming Requirements:

1. Bare steel must always be primed with red oxide primer or manufacturer approved equivalent prior to applying the Contego product.

**** NOTE TO SPECIFIER ** Product may be applied as any other high quality latex based paint: brush, roller, airless spray as described below.**

C. Application: Apply intumescent paints according to manufacturer's written instructions. Use applicators and techniques best suited for substrate and type of material being applied.

1. Do not paint over dirt, rust, scale, grease, moisture, scuffed surfaces, or conditions detrimental to forming a durable paint film.

2. The Original formula (Type R, 50% solids) can be applied with a brush, roller, mitt or spray gun. The HS (High Solids) variant can only be applied with a spray gun.

3. Spraying is the recommended method for either application. The recommended spray setup is 2400 psi (165 bar) with a 0.025 - .032 inch tip (0.63 - .813 mm). All Contego test applications are performed using a Graco XR5, but other commercial quality, positive displacement, airless spray guns are acceptable. If using the HS (High Solids) variant, use a spray gun with 3,600 psi with a 0.036 tip or bigger. In either case, spray a test patch to make sure the product is being properly atomized without clogging the nozzle or other parts of the spray gun.

4. NEVER allow the Contego coating to be exposed to rain, dew, snow, heavy settling fog, water spray or other forms or condensation until completely dry to protected with a suitable top coat. ALL exterior applications must be top coated. The Contego finish must be protected until a suitable top coat has been applied and allowed to dry.

5. Optimal application temperature is 75 degrees F (41 degrees C); application below 45 degrees F (25 degrees C) is not recommended.

6. Provide finish coats that are compatible.

7. The term "exposed surfaces" includes areas visible when permanent or built-in fixtures and similar components are in place. Extend coatings in these areas, as required, to maintain system integrity and provide desired protection.

8. Paint surfaces behind movable equipment and furniture the same as similar exposed surfaces.

D. Scheduling Painting: Apply first coat to surfaces that have been cleaned, pretreated, or otherwise prepared for painting as soon as practicable after preparation and before subsequent surface deterioration.

1. Film thickness required is the same regardless of application method or whether applying Type R or HS.

2. Do not apply succeeding coats until previous coats have dried completely as recommended by manufacturer. If sanding is required to produce a smooth, even surface, do so according to manufacturer's written instructions.

3. If undercoats, stains, or other conditions show through the final coat of paint, apply additional coats until paint film is of uniform finish, color, and appearance. Give special attention to ensure that edges, corners, crevices, and exposed fasteners receive a dry film thickness equivalent to that of flat surfaces.

4. Allow enough time between successive coats to permit complete

drying. Drying time between coats depends on ambient temperature, humidity and the thickness of the coat. Do not recoat surfaces until paint has dried thoroughly, not just dry to the touch. Applying additional coats of Contego before existing coats have dried thoroughly can trap moisture under the surface film and cause the finish to loose adhesion or crack.

E. Application Procedures: Apply coatings by brush, roller, spray, or other methods according to manufacturer's written instructions.

1. Spray Equipment: Use airless spray equipment with orifice size as recommended by manufacturer for material and texture required.

2. Prime Coat: Before applying Contego on steel, apply a prime coat, as recommended by manufacturer, to substrates required to be painted that have not been prime coated by others. Recoat primed and sealed surfaces where evidence of suction spots or unsealed areas appears in the first coat.

3. Minimum Coating Thickness: Apply materials at not less than manufacturer's recommended spreading rate for surface to be coated. Provide total dry film thickness of entire system as recommended by manufacturer. This varies between different substrates and the kind of rating needed.

4. Produce a smooth surface film using multiple coats. Provide a finish free of laps, runs, color irregularity, brush marks, orange peel, nail holes, or other surface imperfections.

5. Completed Work: Match approved samples for texture and coverage. Remove, refinish, or repaint work not complying with specified requirements.

F. Coverage: Coverage varies depending on the thickness of the Contego coating applied and that depends on the weight of the steel, whether or not it is restrained, whether or not it is top coated and the fire resistance rating needed. The dry thickness of each coat depends on the wet thickness applied. Structural steel requires between 5 and 170 dry mils, so multiple coats may be required as shown in our Hp/A regression tables for either version of the product being used.

Generally, you can apply a maximum of 20 wet mils using our Type R before running the risk of sags or runs with the Regular Version and 35 mils with the HS version, but your actual maximum thickness also depends on ambient temperature and humidity. Keep in mind that it is difficult or impossible to lay down the maximum wet film thickness using a brush, roller or mitt. To maximize your wet film thickness per pass, use a spray gun as discussed in this section.

**** NOTE TO SPECIFIER ** Delete if not required.**
**** NOTE TO SPECIFIER ** Delete if not required.**

G. Structural Steel: A final dry film coating of 5 to 170 mil (0.25 to 4.32 mm) is recommended for adequate protection. The thickness needed depends on the W/D, Hp/A or A/P ratios of the steel being protected. Under proper conditions it is possible to achieve this with multiple coats of 20 mil (0.50 mm) wet (36 mils wet for the HS Version). Under less than ideal conditions, it may be necessary to apply more at a lesser thickness until the total required dry film thickness is achieved. In all cases the next coat may be applied when the prior is completely dry.

**** NOTE TO SPECIFIER ** Top coating is optional but HIGHLY recommended since the use of a top coat improves Contego's fire resistance 25% to 32%. However, exterior**

**applications MUST be top coated with an exterior grade acrylic enamel. Delete if not required.**

H. Top Coating: To add color or sheen to surfaces, Contego PFB may be top coated using virtually any alkyd, or latex based acrylic enamel paint as soon as the intumescent coating is completely dry. To top coat with acrylic or latex, spray or roll initial color coat.

1. If using a roller, do not try to re-roll or touch up until your initial color coat is dry.

2. Failure to wait for the first color coat to dry will cause the first color coat to smear or back-roll off the wall.

3. Once first color coat of latex/acrylic is dry apply second coat.

4. Top coating does not reduce intumescent capability and, in fact, improves our fire resistance as discussed earlier.

I. Tinting is possible, but to pastel shades only. Limit tint to 10 percent of paint volume. However, since top coating is both possible and recommended, use a top coat to achieve the exact color and sheen desired.

3.3 CLEANING AND PROTECTION

A. Cleanup: At the end of each workday, remove rubbish, empty cans, rags, and other discarded materials from Project site.

1. After completing painting, clean glass and paint-spattered surfaces. Remove spattered paint by proper methods. Be careful not to scratch or otherwise damage adjacent finished surfaces.

B. Provide "Wet Paint" signs to protect newly painted finishes. After completing painting, remove temporary protective wrappings provided by others to protect their work.

1. After work of other trades is completed, touch up and restore damaged or defaced surfaces.

2. Exterior applications must be protected by a tarp, tenting, or other method to avoid exposure to rain, dew, snow, condensation, heavy fog or other forms of accumulating moisture.

END OF SECTION

# SAFETY DATA SHEET

**Issuing Date** No data available **Revision Date** 4-Aug-2016 **Revision Number** 0

## 1. IDENTIFICATION

**GHS product identifier**

**Product Name** **Contego Intumescent Fire Barrier Latex (Original Formula)**

**Other means of identification**

**Synonyms** None

**Recommended use of the chemical and restrictions on use**

**Recommended Use** Fire barrier paint

**Uses advised against** No information available

**Supplier's details**

**Supplier Address**
Contego International, Inc.
P.O. Box 49
1013 Arthur Street
Rochester, IN 46975
TEL: 1-317-580-0655

**Emergency telephone number**

**Emergency Telephone Number** 1-800-434-6444

## 2. HAZARDS IDENTIFICATION

### Classification

This chemical is not considered hazardous according to the OSHA Hazard Communication Standard 2012 (29 CFR 1910.1200).

Not classified

**GHS Label elements, including precautionary statements**

**Emergency Overview**

**Signal Word** **None**

The product contains no substances which at their given concentration are considered to be hazardous to health

**Appearance** White. **Physical State** Liquid. **Odor** Mild.

## 2. HAZARDS IDENTIFICATION - Continued

**Precautionary Statements**

**Prevention**
• None

**General Advice**
• None

**Storage**
• None

**Disposal**
• None

**Hazard Not Otherwise Classified (HNOC)**

Not applicable.

**Other information**

If product is removed by sanding or grinding may produce dust particulates.

<50% of the mixture consists of ingredient(s) of unknown toxicity.

## 3. COMPOSITION/INFORMATION ON INGREDIENTS

Proprietary Formulation

## 4. FIRST AID MEASURES

### Description of necessary first-aid measures

| | |
|---|---|
| **Eye Contact** | Rinse thoroughly with plenty of water, also under the eyelids. Keep eye wide open while rinsing. Get medical attention if symptoms occur. |
| **Skin Contact** | Wash skin with soap and water. Remove and wash contaminated clothing before re-use. If skin irritation occurs: Get medical advice/ attention. |
| **Inhalation** | IF INHALED: Remove to fresh air and keep at rest in a position comfortable for breathing. Get medical attention if symptoms occur. |
| **Ingestion** | Do NOT induce vomiting. Drink plenty of water. Never give anything by mouth to an unconscious person. Consult a physician if necessary. |
| **Protection of First-aiders** | Ensure that medical personnel are aware of the material(s) involved, and take precautions to protect themselves. |

**Most important symptoms/effects, acute and delayed**

**Most Important Symptoms/Effects** No information available.

**Indication of immediate medical attention and special treatment needed, if necessary**

**Notes to Physician** Treat symptomatically.

## 5. FIRE-FIGHTING MEASURES

**Suitable Extinguishing Media**

Use extinguishing measures that are appropriate to local circumstances and the surrounding environment.

**Unsuitable Extinguishing Media** None

**Specific Hazards Arising from the Chemical**

None known

**Explosion Data**

**Sensitivity to Mechanical Impact** None.

**Sensitivity to Static Discharge** None.

**Protective Equipment and Precautions for Firefighters**

As in any fire, wear self-contained breathing apparatus pressure-demand, MSHA/NIOSH (approved or equivalent) and full protective gear.

## 6. ACCIDENTAL RELEASE MEASURES

**Personal precautions, protective equipment and emergency procedures**

**Personal Precautions** Avoid contact with the skin and the eyes. Use personal protective equipment as required.

**Environmental Precautions**

**Environmental Precautions** See Section 12 for additional Ecological Information.

**Methods and materials for containment and cleaning up**

**Methods for Containment** Prevent further leakage or spillage if safe to do so.

**Methods for Cleaning Up** Soak up with inert absorbent material. Pick up and transfer to properly labeled containers.

## 7. HANDLING AND STORAGE

**Precautions for safe handling**

**Handling** Handle in accordance with good industrial hygiene and safety practice. Avoid contact with skin and eyes. Use personal protective equipment as required. Do not take internally. Wash thoroughly after handling. Avoid sanding and grinding surfaces containing dried paint film.

**Conditions for safe storage, including any incompatibilities**

**Storage** Keep container tightly closed.

**Incompatible Products** Strong acids. Strong oxidizing agents.

## 8. EXPOSURE CONTROLS / PERSONAL PROTECTION

**Control parameters**

**Exposure Guidelines**

| Chemical Name | ACGIH TLV | OSHA PEL | NIOSH IDLH |
|---|---|---|---|
| Pentaerythritol<br>115-77-5 | TWA: 10 mg/m$^3$ | TWA: 15 mg/m$^3$ total dust<br>TWA: 5 mg/m$^3$ respirable fraction<br>(vacated) TWA: 10 mg/m$^3$ total dust<br>(vacated) TWA: 5 mg/m$^3$ respirable fraction | TWA: 10 mg/m$^3$ total dust<br>TWA: 5 mg/m$^3$ respirable dust |
| Titanium dioxide<br>13463-67-7 | TWA: 10 mg/m$^3$ | TWA: 15 mg/m$^3$ total dust<br>(vacated) TWA: 10 mg/m$^3$ total dust | IDLH: 5000 mg/m$^3$ |
| Aluminum hydroxide<br>21645-51-2 | TWA: 1 mg/m$^3$ respirable fraction | - | - |
| Glass, oxide<br>65997-17-3 | TWA: 1 fiber/cm3<br>TWA: 5 mg/m$^3$ inhalable fraction | - | - |

**Appropriate engineering controls**

**Engineering Measures** Showers
Eyewash stations
Ventilation systems

**Individual protection measures, such as personal protective equipment**

**Eye/Face Protection** At minimum, wear safety glasses with side shields. Goggles are preferred, especially with spray applications

**Skin and Body Protection** Wear latex, vinyl, or nitrile gloves and a long sleeved work or jump suit such as Tyvek or similar.

**Respiratory Protection** A dust mask is recommended to protect against exposure to airborne particulates or mists. If exposure limits are exceeded or irritation is experienced, NIOSH/MSHA approved respiratory protection should be worn.

**Hygiene Measures** Handle in accordance with good industrial hygiene and safety practice.

## 9. PHYSICAL AND CHEMICAL PROPERTIES

**Information on basic physical and chemical properties**

**Physical State** Liquid.
**Appearance** White.
**Odor** Mild.
**Odor Threshold** No information available.

| Property | Values | Remarks / Method |
|---|---|---|
| **pH** | 8.0 - 8.5 | None known |
| **Melting Point/Range** | No data available | None known |
| **Boiling Point/Boiling Range** | 100 °C / 212 °F | None known |
| **Flash Point** | Not flammable. | None known |
| **Evaporation rate** | No data available | None known |
| **Flammability (solid, gas)** | No data available | None known |
| **Flammability Limits in Air** | | |
| **upper flammability limit** | No data available | |
| **lower flammability limit** | No data available | |
| **Vapor Pressure** | No data available | None known |
| **Vapor Density** | No data available | None known |
| **Specific Gravity** | 1.1 – 1.3 | No units, but stated at a given temperature |
| **Water Solubility** | No data available | None known |
| **Solubility in other solvents** | No data available | None known |
| **Partition coefficient: n-octanol/water** | No data available | None known |
| **Autoignition Temperature** | No data available | None known |
| **Decomposition Temperature** | No data available | None known |
| **Viscosity** | > 8,000 cTs | None known |

## 9. PHYSICAL AND CHEMICAL PROPERTIES - Continued

**Flammable Properties** Not flammable

**Explosive Properties** No data available
**Oxidizing Properties** No data available

**Other information**

**VOC Content (%)** Negligible
**VOC (g/l)** 0.01

## 10. STABILITY AND REACTIVITY

**Reactivity**

No data available.

**Chemical stability**

Stable under recommended storage conditions.

**Possibility of hazardous reactions**

None under normal processing.

**Hazardous Polymerization**

Hazardous polymerization does not occur.

**Conditions to avoid**

Incompatible products.

**Incompatible materials**

Strong acids. Strong oxidizing agents.

**Hazardous decomposition products**

Carbon oxides. Nitrogen oxides (NOx).

## 11. TOXICOLOGICAL INFORMATION

**Information on likely routes of exposure**

**Product Information**

**Inhalation** No known hazard by inhalation.
**Eye Contact** Contact with eyes may cause irritation.
**Skin Contact** No known hazard in contact with skin.
**Ingestion** No known hazard by swallowing.

| Chemical Name | LD50 Oral | LD50 Dermal | LC50 Inhalation |
|---|---|---|---|
| Pentaerythritol | = 10000 mg/kg ( Rat ) | - | - |
| Titanium dioxide | > 10000 mg/kg ( Rat ) | - | > 6820 mg/m$^3$ |
| Aluminum hydroxide | > 5000 mg/kg ( Rat ) | - | - |

**Symptoms related to the physical, chemical and toxicological characteristics**

**Symptoms** No information available.

## 11. TOXICOLOGICAL INFORMATION - Continued

**Delayed and immediate effects and also chronic effects from short and long term exposure**

**Sensitization** Not expected to be a sensitizer.
**Mutagenic Effects** No information available.
**Carcinogenicity** This product contains titanium dioxide in a non-respirable form. Inhalation of titanium dioxide is unlikely to occur from exposure to this product. However, this product may become a dust nuisance when removed by abrasive blasting, sanding, or grinding.

| Chemical Name | ACGIH | IARC | NTP | OSHA |
|---|---|---|---|---|
| Titanium dioxide | | Group 2B | | X |
| Glass, oxide | | Group 3 | | |
| Silica, amorphous, precipitated and gel | | Group 3 | Reasonably Anticipated | X |

**IARC: (International Agency for Research on Cancer)**
Group 2B - Possibly Carcinogenic to Humans
Group 3 - Not Classifiable as to its Carcinogenicity to Humans

**NTP: (National Toxicity Program)**
Reasonably Anticipated - Reasonably Anticipated to be a Human Carcinogen

**OSHA: (Occupational Safety & Health Administration)**
X - Present

**Reproductive Toxicity** No information available.
**STOT - single exposure** No information available.
**STOT - repeated exposure** No information available.
**Aspiration Hazard** No information available.

**Numerical measures of toxicity - Product**

**Acute Toxicity** <50% of the mixture consists of ingredient(s) of unknown toxicity.

*The following values are calculated based on chapter 3.1 of the GHS document:*

**LD50 Oral** 4425 mg/kg; Acute toxicity estimate

## 12. ECOLOGICAL INFORMATION

| Chemical Name | Toxicity to Algae | Toxicity to Fish | Toxicity to Microorganisms | Daphnia Magna (Water Flea) |
|---|---|---|---|---|
| Pentaerythritol 115-77-5 | | LC50 48 h: = 50000 mg/L semi-static (Oryzias latipes) | | EC50 48 h: 30477 - 37043 mg/L Static (Daphnia magna) EC50 24 h: = 38900 mg/L (Daphnia magna) |

**Persistence and Degradability** No information available.

**Bioaccumulation** No information available.

**Other Adverse Effects**

No information available.

## 13. DISPOSAL CONSIDERATIONS

**Waste Disposal Methods** This material, as supplied, is not a hazardous waste according to Federal regulations (40 CFR 261). This material could become a hazardous waste if it is mixed with or otherwise comes in contact with a hazardous waste, if chemical additions are made to this material, or if the material is processed or otherwise altered. Consult 40 CFR 261 to determine whether the altered material is a hazardous waste. Consult the appropriate state, regional, or local regulations for additional requirements.

**Contaminated Packaging** Do not re-use empty containers.

## 14. TRANSPORT INFORMATION

**DOT** Not regulated

**TDG** Not regulated

**MEX** Not regulated

**ICAO** Not regulated

**IATA** Not regulated

**IMDG/IMO** Not regulated

**RID** Not regulated

**ADR** Not regulated

**ADN** Not regulated

## 15. REGULATORY INFORMATION

### International Inventories

**TSCA** All ingredients are on the inventory or exempt from reporting.
**DSL** Not determined

### Legend

**TSCA** - United States Toxic Substances Control Act Section 8(b) Inventory
**DSL/NDSL** - Canadian Domestic Substances List/Non-Domestic Substances List

### U.S. Federal Regulations

Section 313 of Title III of the Superfund Amendments and Reauthorization Act of 1986 (SARA). This product does not contain any chemicals which are subject to the reporting requirements of the Act and Title 40 of the Code of Federal Regulations, Part 372.

**SARA 311/312 Hazard Categories**

| | |
|---|---|
| **Acute Health Hazard** | No |
| **Chronic Health Hazard** | No |
| **Fire Hazard** | No |
| **Sudden Release of Pressure Hazard** | No |
| **Reactive Hazard** | No |

**Clean Water Act**

This product does not contain any substances regulated as pollutants pursuant to the Clean Water Act (40 CFR 122.21 and 40 CFR 122.42).

## 15. REGULATORY INFORMATION - CONTINUED

### CERCLA

This material, as supplied, does not contain any substances regulated as hazardous substances under the Comprehensive Environmental Response Compensation and Liability Act (CERCLA) (40 CFR 302) or the Superfund Amendments and Reauthorization Act (SARA) (40 CFR 355). There may be specific reporting requirements at the local, regional, or state level pertaining to releases of this material.

### U.S. State Regulations

#### California Proposition 65

This product contains the following Proposition 65 chemicals:

| Chemical Name | CAS-No | California Prop. 65 |
|---|---|---|
| Titanium dioxide | 13463-67-7 | Carcinogen |

### U.S. State Right-to-Know Regulations

"X" designates that the ingredients are listed on the state right to know list.

| Chemical Name | New Jersey | Massachusetts | Pennsylvania | Illinois | Rhode Island |
|---|---|---|---|---|---|
| Melamine | X | X | X | | |
| Pentaerythritol | X | X | X | | X |
| Titanium dioxide | X | X | X | - | X |

### U.S. EPA Label Information

**EPA Pesticide Registration Number** Not applicable

## 16. OTHER INFORMATION

| | | | | | | | |
|---|---|---|---|---|---|---|---|
| **NFPA** | **Health Hazard** | 1 | **Flammability** | 0 | **Instability** 0 | **Physical and Chemical Hazards** | - |
| **HMIS** | **Health Hazard** | 1 | **Flammability** | 0 | **Physical Hazard** 0 | **Personal Protection** | X |

**Revision Date** 4-Aug-2016
**Revision Note** No information available.

**General Disclaimer**

**The information provided on this SDS is correct to the best of our knowledge, information and belief at the date of its publication. The information given is designed only as a guide for safe handling, use, processing, storage, transportation, disposal and release and is not to be considered as a warranty or quality specification. The information relates only to the specific material designated and may not be valid for such material used in combination with any other material or in any process, unless specified in the text.**

| | | | |
|---|---|---|---|
| **PREPARED BY**: | Comprehensive Safety Compliance, Inc. (CSC)<br>Occupational Health and Safety Consultant<br>(412) 826-5480 | **VERSION NO.**: 1 | **APPROVAL DATE**: 8/4/16 |
| **MFR. CONTACT**: | Contego International, Inc.<br>P.O. Box 49<br>1013 Arthur Street<br>Rochester, IN 46975<br>TEL: 1-317-580-0655 | **SUPERSEDES SDS DATED**: N/A | |

**End of Safety Data Sheet**

Benjamin Moore®

PT-012, PT-026, PT-029

Revision Date:

# AURA®

## WATERBORNE INTERIOR PAINT MATTE FINISH 522

## Features

- Extreme hide for fewer coats
- Color Lock® Technology, no color rub-off
- Provides a mildew resistant coating
- Zero VOC, low odor
- Easy application
- Self-priming
- Stains wash off easily
- Excellent touch up
- Easy clean up

## General Description

Aura® Matte Finish is part of an innovative paint and colorant system integrating the best technologies to deliver superior durability for any color along with the promise of long lasting beauty. In addition to using 100% acrylic latex, proprietary resins have been incorporated to give the product its extraordinary performance properties.

## Recommended For

New or previously painted wallboard, plaster, masonry and wood; primed or previously painted metal; new or coated acoustic ceilings. It is ideal for surfaces where maximum durability is required and lasting color is desired.

## Limitations

- Do not apply when air and surface temperatures are below 50°F (10°C)
- Only Gennex® Waterborne Colorants can be added to Aura® Paint

## Product Information

### Colors: —Standard:

White (01)

### —Tint Bases:

Benjamin Moore® Gennex® Bases 1X, 2X, 3X, & 4X

### —Special Colors:

Contact your Benjamin Moore® representative.

### Certification:

**VOC compliant in all regulated areas**

Zero VOC according to EPA Method 24
Master Painters Institute MPI # 53, 53 X-Green™, 143, 143 X-Green™
Class A (0-25) over non-combustible surfaces in accordance with ASTM E-84

**Anti-microbial** - This product contains agents which inhibit the growth of microbes on the surface of this paint film. This product contains antimicrobial additives that inhibit the growth of mold and mildew on the surface of the paint film.

Benjamin Moore's green promise®

COLLABORATIVE FOR HIGH PERFORMANCE SCHOOLS. CHPS

Benjamin Moore's Green Promise® designation is our company's assurance that this product meets – and often exceeds– rigorous environmental and performance criteria regarding VOCs, emissions, application, washability, scrubbability and packaging, while also delivering the premium levels of performance you expect from Benjamin Moore.

| LEED® v4 | CHPS (Collaborative for High Performance Schools) | MPI Green Performance™ | VOC (in any color) |
|---|---|---|---|
| YES | YES | YES | 0 g/L |

This Benjamin Moore product has been tested by independent third parties and meets or exceeds the published chemical restriction and performance criteria included in the standard shown below.

Green Seal™ GS-11 2010

### Technical Assistance:

Available through your local authorized independent Benjamin Moore retailer. For the location of the retailer nearest you, call 1-800-826-2623, see www.benjaminmoore.com , or consult your local Yellow Pages.

| Technical Data◊ | | Pastel Base |
|---|---|---|
| Vehicle Type | | Acrylic & Proprietary Resins |
| Pigment Type | | Titanium Dioxide |
| Volume Solids | | 47.8% |
| Coverage per Gallon at Recommended Film Thickness | | 350 – 400 Sq. Ft. |
| Recommended Film Thickness | – Wet | 4.3 mils |
| | – Dry | 2.1 mils |
| Depending on surface texture and porosity. Be sure to estimate the right amount of paint for the job. This will ensure color uniformity and minimize the disposal of excess paint | | |
| Dry Time @ 77°F (25°C) @ 50% RH | – To Touch | 1 Hour |
| | – To Recoat | 1 Hour |
| Painted surfaces can be washed after two weeks. High humidity and cool temperatures will result in longer dry, recoat and service times | | |
| Dries By | | Evaporation, Coalescence |
| Viscosity | | 103 ± 2 KU |
| Flash Point | | None |
| Gloss / Sheen | | Matte (3 - 5 @ 85°) |
| Surface Temperature at Application | – Min. | 50°F |
| | – Max. | 90°F |
| Thin With | | See Chart |
| Clean Up Thinner | | Clean Water |
| Weight Per Gallon | | 12.3 lbs |
| Storage Temperature | – Min. | 40°F |
| | – Max. | 90°F |

**Volatile Organic Compounds (VOC)**

0 Grams / Liter* 0 LBS / Gallon

Zero VOC post tint (any base and any color)

◊Reported values are for Pastel Base. Contact Benjamin Moore for values of other bases or colors.

## Surface Preparation

Surfaces to be painted must be clean, dry, and free of dirt, dust, grease, oil, soap, wax, scaling paint, water soluble materials and mildew. Remove any peeling or scaling paint, and sand these areas to feather edges smooth with adjacent surfaces. Glossy areas should be dulled. Drywall surfaces must be free of sanding dust. Spot prime with Aura® Matte Finish Paint before and after filling nail holes, cracks, and other surface imperfections.

New plaster or masonry surfaces must be allowed to cure (30 days) before applying base coat. Cured plaster should be hard, have a slight sheen and maximum pH of 10; soft, porous or powdery plaster indicates improper cure. Never sand a plaster surface; knife off any protrusions and prime plaster before and after applying patching compound. Poured or pre-cast concrete with a very smooth surface should be etched or abraded to promote adhesion, after removing all form release agents and curing compounds. Remove any powder or loose particles.

**Difficult Substrates**: Benjamin Moore® offers a variety of specialty primers for use over difficult substrates such as plaster, bleeding woods, grease stains, crayon markings, hard glossy surfaces, galvanized metal, or other substrates where paint adhesion or stain suppression is a particular problem. Your Benjamin Moore® retailer can recommend the right problem-solving primer for your special needs.

**WARNING!** If you scrape, sand, or remove old paint, you may release lead dust. **LEAD IS TOXIC. EXPOSURE TO LEAD DUST CAN CAUSE SERIOUS ILLNESS, SUCH AS BRAIN DAMAGE, ESPECIALLY IN CHILDREN. PREGNANT WOMEN SHOULD ALSO AVOID EXPOSURE.** Wear a NIOSH approved respirator to control lead exposure. Clean up carefully with a HEPA vacuum and a wet mop. Before you start, find out how to protect yourself and your family by contacting the National Lead Informational Hotline at 1-800-424-LEAD or log on to www.epa.gov/lead.

## Primer/Finish Systems

Aura® Matte Finish is self priming on most surfaces. Aura® will act as its own primer, providing the optimal foundation for the subsequent finish coat. On bare substrates two coats are required; previously painted surfaces can be finished with 1 or 2 coats. **Special Note**: For certain deep colors, Aura® Color Foundation must be used to achieve maximum hide and the desired topcoat color. Consult your retailer.

**Wood and Engineered Wood Products:**
**Primer:** Fresh Start® Multi-Purpose Latex Primer (023) or Fresh Start® High-Hiding All Purpose Primer (046)
**Finish:** 1 or 2 coats Aura® Matte Finish (522)

**Bleeding woods such as cedar and redwood:**
**Primer:** Fresh Start® High-Hiding All Purpose Primer (046) or Fresh Start® Multi-Purpose Oil Based Primer (024)
**Finish:** 1 or 2 coats Aura® Matte Finish (522)

**Plaster/Wallboard:**
**Primer/Finish:** 1 or 2 coats of Aura® Matte Finish (522).

**Rough or Pitted Masonry:**
**Primer:** Ultra Spec® Masonry Interior/Exterior Hi-Build Block Filler (571)
**Finish:** 1 or 2 coats of Aura® Matte Finish (522)

**Smooth Poured or Precast Concrete:**
**Primer/Finish:** 1 or 2 coats of Aura® Matte Finish (522)

**Ferrous Metal (Steel & Iron):**
**Primer:** Ultra Spec® HP Acrylic Metal Primer (HP04) or Super Spec HP® Alkyd Metal Primer (P06)
**Finish:** 1 or 2 coats of Aura® Matte Finish (522)

**Non-Ferrous Metal (Galvanized & Aluminum):**
All new metal surfaces must be thoroughly cleaned with an Oil & Grease Emulsifier Corotech® V600 to remove contaminants. New shiny non-ferrous metal surfaces that will be subject to abrasion should be dulled with very fine sandpaper or a synthetic steel wool pad to promote adhesion.
**Primer:** Not required on properly prepared surfaces
**Finish:** 1 or 2 coats of Aura® Matte Finish (522).

**Repaint, All Substrates:** Prime bare areas with the product recommended for the substrate above.

## Application

**Mixing of Paint:** Stir thoroughly before and during use. Use the same brushing techniques as you would for any low-VOC interior coating. Benjamin Moore recommends an extra firm nylon polyester brush for best results.

Aura® offers excellent flow and leveling. Do not over brush in the attempt to smooth out brush marks.

We recommend the Benjamin Moore® Aura® shed-resistant, 3/8" nap roller cover for best results. Aura® dries faster than other acrylic paints, so avoid lap marks by maintaining a wet edge. Roll out vertical sections in 3' to 4' widths.

If your edge begins to dry or you see that you missed a spot and the paint is already setting up, allow it to dry completely before touching up that area.

This product can also be sprayed; refer to the chart below for spray recommendations.

## Thinning/Clean Up

**Conditioning with Benjamin Moore® 518 Extender may be necessary under certain conditions to adjust open time or spray characteristics. The chart below is for general guidance**

| | **Mild conditions** | **Severe conditions** |
|---|---|---|
| | Humid (RH> 50%) with no direct sunlight & with little to no wind | Dry (RH<50%), in direct sunlight, or windy conditions |
| **Brush:** Nylon / Polyester | No thinning necessary | Add **518 Extender** or **water:** Max of 8 fl. oz. to a gallon of paint **Never add other paints or solvents.** |
| **Roller:** 3/8' Aura® Roller Cover | | |
| **Spray:** Airless Pressure: 1000 - 2000 psi Tip: 0.013-0.017 | | |

**Clean up:** Wash painting tools in warm soapy water immediately after use. Spray equipment should be given a final rinse with mineral spirits to prevent rusting or follow state/local guidelines on solvent use.

**USE COMPLETELY OR DISPOSE OF PROPERLY.** Dry, empty containers may be recycled in a can recycling program. **Local disposal requirements vary; consult your sanitation department or state-designated environmental agency on disposal options.**

## Environmental Health & Safety Information

**Use only with adequate ventilation.** Do not breathe spray mist or sanding dust. Ensure fresh air entry during application and drying. Avoid contact with eyes and prolonged or repeated contact with skin. May cause allergic skin reaction. Avoid exposure to dust and spray mist by wearing a NIOSH approved respirator during application, sanding and clean up. Follow respirator manufacturer's directions for respirator use. Close container after each use. Wash thoroughly after handling.

**WARNING:** This product contains a chemical known to the state of California to cause cancer and birth defects, or other reproductive harm.

**FIRST AID:** In case of eye contact, flush immediately with plenty of water for at least 15 minutes; for skin, wash thoroughly with soap and water. If symptoms persist, seek medical attention. If you experience difficulty breathing, leave the area to obtain fresh air. If continued difficulty is experienced, get medical attention immediately.

**IN CASE OF SPILL** – Absorb with inert material and dispose of as specified under **Thinning/Clean up.**

**KEEP OUT OF REACH OF CHILDREN**
**PROTECT FROM FREEZING**

**Refer to Safety Data Sheet for additional health and safety information.**

Benjamin Moore & Co., 101 Paragon Drive, Montvale, NJ 07645 Tel: (201) 573-9600 Fax: (201) 573-9046 www.benjaminmoore.com M72 522 US 040517
Aura, Benjamin Moore, Color Lock, Fresh Start, Gennex, Green Promise, Super Spec HP, Ultra Spec and the triangle "M" symbol are registered trademarks, licensed to Benjamin Moore & Co. This product is not endorsed by or a division of CHPS. This product is provided by Benjamin Moore, not CHPS. All other trademarks belong to their respective owners. © 2017 Benjamin Moore & Co. All rights reserved

Benjamin Moore®

PT-018, PT-022

Revision Date:

# AURA®

## WATERBORNE INTERIOR PAINT SEMI-GLOSS FINISH 528

## Features

- Extreme hide for fewer coats
- Color Lock® Technology, no color rub-off
- Provides a mildew resistant coating
- Zero VOC, low odor
- Easy application
- Self priming
- Stains wash off easily
- Excellent touch up
- Easy clean up

## General Description

Aura® Semi-Gloss Finish is part of an innovative paint and colorant system integrating the best technologies to deliver superior durability for any color along with the promise of long lasting beauty. In addition to using 100% acrylic latex, proprietary resins have been incorporated to give the product its extraordinary performance properties.

## Recommended For

New or previously painted wallboard, plaster masonry and wood; primed or previously painted metal; new or coated acoustic ceilings. It is ideal for surfaces where maximum durability is required and lasting color is desired.

## Limitations

- Do not apply when air and surface temperatures are below 50°F (10°C)
- Only Gennex® Waterborne Colorants can be added to Aura® Paint

## Product Information

### Colors: — Standard:

White (01)

### —Tint Bases:

Benjamin Moore® Gennex® Bases 1X, 2X, 3X, & 4X

### —Special Colors:

Contact your Benjamin Moore® representative.

### Certification:

**VOC compliant in all regulated areas**

Zero VOC according to EPA Method 24

Master Painters Institute MPI # 54, 54 X-Green, High Performance 141, 141 X-Green; 147, 147 X-Green

Class A (0-25) over non-combustible surfaces in accordance with ASTM E-84

**Anti-microbial -** This product contains agents which inhibit the growth of microbes on the surface of this paint film. This product contains antimicrobial additives that inhibit the growth of mold and mildew on the surface of the paint film.

Benjamin Moore's Green Promise® designation is our company's assurance that this product meets – and often exceeds– rigorous environmental and performance criteria regarding VOCs, emissions, application, washability, scrubbability and packaging, while also delivering the premium levels of performance you expect from Benjamin Moore.

| LEED® v4 | CHPS (Collaborative for High Performance Schools) | MPI Green Performance™ | VOC (in any color) |
|---|---|---|---|
| YES | YES | YES | 0 g/L |

This Benjamin Moore product has been tested by independent third parties and meets or exceeds the published chemical restriction and performance criteria included in the standard shown below.

Green Seal™ GS-11 2010

### Technical Assistance:

Available through your local authorized independent Benjamin Moore® retailer. For the location of the retailer nearest you, call 1-800-826-2623, see www.benjaminmoore.com, or consult your local Yellow Pages.

| Technical Data◊ | | Pastel Base |
|---|---|---|
| Vehicle Type | | Acrylic & Proprietary Resins |
| Pigment Type | | Titanium Dioxide |
| Volume Solids | | 40.1% |
| Coverage per Gallon at Recommended Film Thickness | | 400 – 450 Sq. Ft. |
| Recommended Film Thickness | – Wet | 3.8 mils |
| | – Dry | 1.5 mils |
| Depending on surface texture and porosity. Be sure to estimate the right amount of paint for the job. This will ensure color uniformity and minimize the disposal of excess paint. | | |
| Dry Time @ 77°F (25°C) @ 50% RH | – Dry to Touch | 1 Hour |
| | – To Recoat | 1 Hour |
| Painted surfaces can be washed after two weeks. High humidity and cool temperatures will result in longer dry, recoat and service times. | | |
| Dries By | | Evaporation, Coalescence |
| Viscosity | | 101 ± 2 KU |
| Flash Point | | None |
| Gloss / Sheen | | Semi-Gloss (50-60 @ 60°) |
| Surface Temperature at Application | – Min. | 50°F |
| | – Max. | 90°F |
| Thin With | | See Chart |
| Clean Up Thinner | | Clean Water |
| Weight Per Gallon | | 10.8 lbs |
| Storage Temperature | – Min. | 40°F |
| | – Max. | 90°F |

**Volatile Organic Compounds (VOC)**

0g/L

Zero VOC post tint (any base and any color)

◊Reported values are for Pastel Base. Contact Benjamin Moore for values of other bases or colors.

## Surface Preparation

Surfaces to be painted must be clean, dry, and free of dirt, dust, grease, oil, soap, wax, scaling paint, water soluble materials and mildew. Remove any peeling or scaling paint, and sand these areas to feather edges smooth with adjacent surfaces. Glossy areas should be dulled. Drywall surfaces must be free of sanding dust. Spot prime with Aura® Semi-gloss Finish Paint before and after filling nail holes, cracks, and other surface imperfections.

New plaster or masonry surfaces must be allowed to cure (30 days) before applying base coat. Cured plaster should be hard, have a slight sheen and maximum pH of 10; soft, porous or powdery plaster indicates improper cure. Never sand a plaster surface; knife off any protrusions and prime plaster before and after applying patching compound. Poured or pre-cast concrete with a very smooth surface should be etched or abraded to promote adhesion, after removing all form release agents and curing compounds. Remove any powder or loose particles.

**Difficult Substrates:** Benjamin Moore offers a variety of specialty primers for use over difficult substrates such as plaster, bleeding woods, grease stains, crayon markings, hard glossy surfaces, galvanized metal or other substrates where paint adhesion or stain suppression is a particular problem. Your Benjamin Moore® retailer can recommend the right problem-solving primer for your special needs.

**WARNING!** If you scrape, sand, or remove old paint, you may release lead dust. **LEAD IS TOXIC. EXPOSURE TO LEAD DUST CAN CAUSE SERIOUS ILLNESS, SUCH AS BRAIN DAMAGE, ESPECIALLY IN CHILDREN. PREGNANT WOMEN SHOULD ALSO AVOID EXPOSURE**. Wear a NIOSH approved respirator to control lead exposure. Clean up carefully with a HEPA vacuum and a wet mop. Carefully clean up with a HEPA vacuum and a wet mop. Before you start, find out how to protect yourself and your family by contacting the National Lead Information Hotline at 1-800-424-LEAD or log on to www.epa.gov/lead

## Primer/Finish Systems

Aura® Semi-gloss Finish is self priming on most surfaces. Aura® will act as its own primer, providing the optimal foundation for the subsequent finish coat. On bare substrates two coats are required; previously painted surfaces can be finished with 1 or 2 coats. **Special Note:** For certain deep colors, Aura® Color Foundation must be used to achieve maximum hide and the desired topcoat color. Consult your retailer.

**Wood and Engineered Wood Products:**
**Primer:** Fresh Start® Multi-Purpose Latex Primer (023) or Fresh Start® High-Hiding All Purpose Primer (046)
**Finish:** 1 or 2 coats Aura® Semi-gloss Finish (528)

**Bleeding woods such as cedar and redwood:**
**Primer:** Fresh Start® High-Hiding All Purpose Primer (046) or Fresh Start® Multi-Purpose Oil Based Primer (024)

**Plaster/Wallboard:**
**Primer/Finish:** 1 or 2 coats of Aura® Semi-gloss Finish (528)

**Rough or Pitted Masonry:**
**Primer:** Ultra Spec® Masonry Interior/Exterior Hi-Build Block Filler (571)
**Finish:** 1 or 2 coats of Aura® Semi-gloss Finish (528)

**Smooth Poured or Precast Concrete:**
**Primer/Finish:** 1 or 2 coats of Aura® Semi-gloss Finish (528)

**Ferrous Metal (Steel & Iron):**
**Primer:** Ultra Spec® HP Acrylic Metal Primer (HP04) or Super Spec HP® Alkyd Metal Primer (P06)
**Finish:** 1 or 2 coats of Aura® Semi-gloss Finish (528)

**Non-Ferrous Metal (Galvanized & Aluminum):**
All new metal surfaces must be thoroughly cleaned with Oil & Grease Emulsifier Corotech® V600 to remove contaminants. New shiny non-ferrous metal surfaces that will be subject to abrasion should be dulled with very fine sandpaper or a synthetic steel wool pad to promote adhesion.
**Primer:** Not required on properly prepared surfaces.
**Finish:** 1 or 2 coats of Aura® Semi-gloss Finish (528)

**Repaint, All Substrates:** Prime bare areas with the primer / finish recommended for the substrate above.

## Application

**Mixing of Paint:** Stir thoroughly before and during use.

Use the same brushing techniques as you would for any low-VOC interior coating. Benjamin Moore recommends an extra firm nylon polyester brush for best results.

Aura® offers excellent flow and leveling. Do not over brush in the attempt to smooth out brush marks.

We recommend the Benjamin Moore® Aura® shed-resistant, 3/8" nap roller cover for best results. Aura® dries faster than other acrylic paints, so avoid lap marks by maintaining a wet edge. Roll out vertical sections in 3' to 4' widths.

If your edge begins to dry or you see that you missed a spot and the paint is already setting up, allow it to dry completely before touching up that area.

This product can also be sprayed; refer to the chart below for spray recommendations.

## Thinning/Clean Up

**Conditioning with Benjamin Moore® 518 Extender may be necessary under certain conditions to adjust open time or spray characteristics. The chart below is for general guidance**

| | **Mild conditions** | **Severe conditions** |
|---|---|---|
| | Humid (RH> 50%) with no direct sunlight & with little to no wind | Dry (RH<50%), in direct sunlight, or windy conditions |
| **Brush:** Nylon / Polyester | No thinning necessary | Add **518 Extender** or **water:** Max of 8 fl. oz. to a gallon of paint **Never add other paints or solvents.** |
| **Roller:** 3/8' Aura® Roller Cover | | |
| **Spray:** Airless Pressure: 1000 - 2000 psi Tip: 0.013-0.017 | | |

**Clean up:** Wash painting tools in warm soapy water immediately after use. Spray equipment should be given a final rinse with mineral spirits to prevent rusting or follow state/local guidelines on solvent use.

**USE COMPLETELY OR DISPOSE OF PROPERLY.** Dry, empty containers may be recycled in a can recycling program. **Local disposal requirements vary; consult your sanitation department or state-designated environmental agency on disposal options.**

## Environmental Health & Safety Information

**Use only with adequate ventilation.** Do not breathe spray mist or sanding dust. Ensure fresh air entry during application and drying. Avoid contact with eyes and prolonged or repeated contact with skin. May cause allergic skin reaction. Avoid exposure to dust and spray mist by wearing a NIOSH approved respirator during application, sanding and clean up. Follow respirator manufacturer's directions for respirator use. Close container after each use. Wash thoroughly after handling.

**WARNING:** This product contains a chemical known to the state of California to cause cancer and birth defects, or other reproductive harm.

**FIRST AID:** In case of eye contact, flush immediately with plenty of water for at least 15 minutes; for skin, wash thoroughly with soap and water. If symptoms persist, seek medical attention. If you experience difficulty breathing, leave the area to obtain fresh air. If continued difficulty is experienced, get medical attention immediately.

**IN CASE OF SPILL** – Absorb with inert material and dispose of as specified under **Thinning/Clean up.**

**KEEP OUT OF REACH OF CHILDREN**
**PROTECT FROM FREEZING**

**Refer to Safety Data Sheet for additional health and safety information**

Benjamin Moore & Co., 101 Paragon Drive, Montvale, NJ 07645 Tel: (201) 573-9600 Fax: (201) 573-9046 www.benjaminmoore.com M72 528 US 040617
Aura, Benjamin Moore, Color Lock, Fresh Start, Gennex, Green Promise, Super Spec HP, Ultra Spec and the triangle "M" symbol are registered trademarks, licensed to Benjamin Moore & Co. This product is not endorsed by or a division of CHPS. This product is provided by Benjamin Moore, not CHPS. All other trademarks belong to their respective owners. ©2008, 2017 Benjamin Moore & Co. All rights reserved

PT-019, PT-025, PT-033, PT-041

Revision Date:

# AURA®

## WATERBORNE INTERIOR PAINT EGGSHELL FINISH 524

## Features

- Extreme hide for fewer coats
- Color Lock® Technology, no color rub-off
- Provides a mildew resistant coating
- Zero VOC, low odor
- Easy application
- Self-priming
- Stains wash off easily
- Excellent touch up
- Easy clean up

## General Description

Aura® Eggshell Finish is part of an innovative paint and colorant system integrating the best technologies to deliver superior durability for any color along with the promise of long lasting beauty. In addition to using 100% acrylic latex, proprietary resins have been incorporated to give the product its extraordinary performance properties.

## Recommended For

New or previously painted wallboard, plaster, masonry and wood; primed or previously painted metal; new or coated acoustic ceilings. It is ideal for surfaces where maximum durability is required and lasting color is desired.

## Limitations

- Do not apply when air and surface temperatures are below 50°F (10°C)
- Only Gennex® Waterborne Colorants can be added to Aura® Paint

## Product Information

### Colors: —Standard:

White (01)

### —Tint Bases:

Benjamin Moore® Gennex® Bases 1X, 2X, 3X, & 4X

### —Special Colors:

Contact your Benjamin Moore® representative.

### Certification:

**VOC compliant in all regulated areas**

Zero VOC according to EPA Method 24
Master Painters Institute MPI # 44, 44 X-Green™, 138, 138 X-Green™
Class A (0-25) over non-combustible surfaces in accordance with ASTM E-84

**Anti-microbial** - This product contains agents which inhibit the growth of microbes on the surface of this paint film. This product contains antimicrobial additives that inhibit the growth of mold and mildew on the surface of the paint film.

Benjamin Moore's Green Promise® designation is our company's assurance that this product meets – and often exceeds– rigorous environmental and performance criteria regarding VOCs, emissions, application, washability, scrubbability and packaging, while also delivering the premium levels of performance you expect from Benjamin Moore.

| LEED® v4 | CHPS (Collaborative for High Performance Schools) | MPI Green Performance™ | VOC (in any color) |
|---|---|---|---|
| YES | YES | YES | 0 g/L |

This Benjamin Moore product has been tested by independent third parties and meets or exceeds the published chemical restriction and performance criteria included in the standard shown below.

Green Seal™ GS-11 2010

### Technical Assistance:

Available through your local authorized independent Benjamin Moore® retailer. For the location of the retailer nearest you, call 1-800-826-2623, see www.benjaminmoore.com, or consult your local Yellow Pages.

| Technical Data◊ | | Pastel Base |
|---|---|---|
| Vehicle Type | | Acrylic & Proprietary Resins |
| Pigment Type | | Titanium Dioxide |
| Volume Solids | | 46.3% |
| Coverage per Gallon at Recommended Film Thickness | | 350 – 400 Sq. Ft. |
| Recommended Film Thickness | – Wet | 4.3 mils |
| | – Dry | 2.0 mils |
| Depending on surface texture and porosity. Be sure to estimate the right amount of paint for the job. This will ensure color uniformity and minimize the disposal of excess paint. | | |
| Dry Time @ 77° F (25° C) @ 50% RH | – To Touch | 1 Hour |
| | – To Recoat | 1 Hour |
| Painted surfaces can be washed after two weeks. High humidity and cool temperatures will result in longer dry, recoat and service times. | | |
| Dries By | | Evaporation, Coalescence |
| Viscosity | | 99 ± 2 KU |
| Flash Point | | None |
| Gloss / Sheen | | Eggshell (12-22 @ 85°) |
| Surface Temperature at Application | – Min. | 50° F |
| | – Max | 90° F |
| Thin With | | See Chart |
| Clean Up Thinner | | Clean Water |
| Weight Per Gallon | | 12.2 lbs |
| Storage Temperature | – Min. | 40°F |
| | – Max | 90°F |

**Volatile Organic Compounds (VOC)**

0 Grams / Liter* 0 LBS / Gallon

Zero VOC post tint (any base and any color)

◊Reported values are for Pastel Base. Contact Benjamin Moore for values of other bases or colors.

## Surface Preparation

Surfaces to be painted must be clean, dry, and free of dirt, dust, grease, oil, soap, wax, scaling paint, water soluble materials and mildew. Remove any peeling or scaling paint, and sand these areas to feather edges smooth with adjacent surfaces. Glossy areas should be dulled. Drywall surfaces must be free of sanding dust. Spot prime with Aura® Eggshell Finish Paint before and after filling nail holes, cracks, and other surface imperfections.

New plaster or masonry surfaces must be allowed to cure (30 days) before applying base coat. Cured plaster should be hard, have a slight sheen and maximum pH of 10; soft, porous or powdery plaster indicates improper cure. Never sand a plaster surface; knife off any protrusions and prime plaster before and after applying patching compound. Poured or pre-cast concrete with a very smooth surface should be etched or abraded to promote adhesion, after removing all form release agents and curing compounds. Remove any powder or loose particles.

**Difficult Substrates**: Benjamin Moore offers a variety of specialty primers for use over difficult substrates such as plaster, bleeding woods, grease stains, crayon markings, hard glossy surfaces, galvanized metal, or other substrates where paint adhesion or stain suppression is a particular problem. Your Benjamin Moore® retailer can recommend the right problem-solving primer for your special needs.

**WARNING!** If you scrape, sand, or remove old paint, you may release lead dust. **LEAD IS TOXIC. EXPOSURE TO LEAD DUST CAN CAUSE SERIOUS ILLNESS, SUCH AS BRAIN DAMAGE, ESPECIALLY IN CHILDREN. PREGNANT WOMEN SHOULD ALSO AVOID EXPOSURE**. Wear a NIOSH approved respirator to control lead exposure. Clean up carefully with a HEPA vacuum and a wet mop. Carefully clean up with a HEPA vacuum and a wet mop. Before you start, find out how to protect yourself and your family by contacting the National Lead Information Hotline at 1-800-424-LEAD or log on to www.epa.gov/lead

## Primer/Finish Systems

Aura® Eggshell Finish is self priming on most surfaces. Aura® will act as its own primer, providing the optimal foundation for the subsequent finish coat. On bare substrates two coats are required; previously painted surfaces can be finished with 1 or 2 coats. **Special Note:** For certain deep colors, Aura® Color Foundation must be used to achieve maximum hide and the desired topcoat color. Consult your retailer.

**Wood and Engineered Wood Products:**
**Primer:** Fresh Start® Multi-Purpose Latex Primer (023) or Fresh Start® High-Hiding All Purpose Primer (046)
**Finish:** 1 or 2 coats Aura® Eggshell Finish (524)

**Bleeding woods such as cedar and redwood:**
**Primer:** Fresh Start® High-Hiding All Purpose Primer (046) or Fresh Start® Multi-Purpose Oil Based Primer (024)
**Finish:** 1 or 2 coats Aura® Eggshell Finish (524)

**Plaster/Wallboard:**
**Primer/Finish**: 1 or 2 coats of Aura® Eggshell Finish (524)

**Rough or Pitted Masonry:**
**Primer:** Ultra Spec® Masonry Interior/Exterior Hi-Build Block Filler (571)
**Finish:** 1 or 2 coats of Aura® Eggshell Finish.

**Smooth Poured or Precast Concrete:**
**Primer/Finish**: 1 or 2 coats of Aura® Eggshell Finish (524)

**Ferrous Metal (Steel & Iron):**
**Primer:** Ultra Spec® HP Acrylic Metal Primer (HP04) or Super Spec HP® Alkyd Metal Primer (P06)
**Finish:** 1 or 2 coats of Aura® Eggshell Finish (524)

**Non-Ferrous Metal (Galvanized & Aluminum):**
All new metal surfaces must be thoroughly cleaned with Oil & Grease Emulsifier Corotech® V600 to remove contaminants. New shiny non-ferrous metal surfaces that will be subject to abrasion should be dulled with very fine sandpaper or a synthetic steel wool pad to promote adhesion.
**Primer:** Not required on properly prepared surfaces
**Finish:** 1 or 2 coats of Aura® Eggshell Finish (524)

**Repaint, All Substrates:** Prime bare areas with the product recommended for the substrate above.

## Application

Mixing of Paint: Stir thoroughly before and during use. Use the same brushing techniques as you would for any low-VOC interior coating. Benjamin Moore recommends an extra firm nylon polyester brush for best results.

Aura® offers excellent flow and leveling. Do not over brush in the attempt to smooth out brush marks.

We recommend the Benjamin Moore® Aura® shed-resistant, 3/8" nap roller cover for best results. Aura® dries faster than other acrylic paints, so avoid lap marks by maintaining a wet edge. Roll out vertical sections in 3' to 4' widths.

If your edge begins to dry or you see that you missed a spot and the paint is already setting up, allow it to dry completely before touching up that area.

This product can also be sprayed; refer to the chart below for spray recommendations.

## Thinning/Clean Up

**Conditioning with Benjamin Moore® 518 Extender may be necessary under certain conditions to adjust open time or spray characteristics. The chart below is for general guidance**

| | **Mild conditions** | **Severe conditions** |
|---|---|---|
| | Humid (RH> 50%) with no direct sunlight & with little to no wind | Dry (RH<50%), in direct sunlight, or windy conditions |
| **Brush:** Nylon / Polyester | No thinning necessary | Add **518 Extender** or **water:** Max of 8 fl. oz. to a gallon of paint **Never add other paints or solvents.** |
| **Roller:** 3/8' Aura® Roller Cover | | |
| **Spray:** Airless Pressure: 1000 - 2000 psi Tip: 0.013-0.017 | | |

**Clean up:** Wash painting tools in warm soapy water immediately after use. Spray equipment should be given a final rinse with mineral spirits to prevent rusting or follow state/local guidelines on solvent use.

**USE COMPLETELY OR DISPOSE OF PROPERLY.** Dry, empty containers may be recycled in a can recycling program. **Local disposal requirements vary; consult your sanitation department or state-designated environmental agency on disposal options.**

## Environmental Health & Safety Information

**Use only with adequate ventilation.** Do not breathe spray mist or sanding dust. Ensure fresh air entry during application and drying. Avoid contact with eyes and prolonged or repeated contact with skin. May cause allergic skin reaction. Avoid exposure to dust and spray mist by wearing a NIOSH approved respirator during application, sanding and clean up. Follow respirator manufacturer's directions for respirator use. Close container after each use. Wash thoroughly after handling.

**WARNING:** This product contains a chemical known to the state of California to cause cancer and birth defects, or other reproductive harm.

**FIRST AID:** In case of eye contact, flush immediately with plenty of water for at least 15 minutes; for skin, wash thoroughly with soap and water. If symptoms persist, seek medical attention. If you experience difficulty breathing, leave the area to obtain fresh air. If continued difficulty is experienced, get medical attention immediately.

**IN CASE OF SPILL** – Absorb with inert material and dispose of as specified under **Thinning/Clean up.**

**KEEP OUT OF REACH OF CHILDREN**
**PROTECT FROM FREEZING**

**Refer to Safety Data Sheet for additional health and safety information.**

Benjamin Moore & Co., 101 Paragon Drive, Montvale, NJ 07645 Tel: (201) 573-9600 Fax: (201) 573-9046 www.benjaminmoore.com M72 524 US 040517
Aura, Benjamin Moore, Color Lock, Fresh Start, Gennex, Green Promise, Super Spec HP, Ultra Spec and the triangle "M" symbol are registered trademarks, licensed to Benjamin Moore & Co. This product is not endorsed by or a division of CHPS. This product is provided by Benjamin Moore, not CHPS. All other trademarks belong to their respective owners. ©2017 Benjamin Moore & Co. All rights reserved

| PT-010 |
| --- |
| Revision Date: |

# ›ENVIROMETAL

**FINISH DATA SHEET**

Scuffmaster®
Pretty. Tough. Paint.™

## FINISH DESCRIPTION

**Brushable, Rollable, Beautiful.**

Refined and radiant or bold and energetic - it's your vision and this brush or roller applied metallic finish gives you the flexibility to acheve it.

| FEATURES | BENEFITS |
| --- | --- |
| **Metallic Finish** | Effect Elegant and sophisticated and flexible design |
| **Environmentally Responsible** | LEED compliant, low-odor application and low-VOC content make Scuffmaster water-base paints compliant with national and international Environmental standards – including the US Green Building Council, Green Seal, California South Coast Air Quality Management District and the European Union |
| **Easy Application** | Extremely versatile – applied by hand, either brushed or rolled. NOT TO BE SPRAYED. For sprayed metallic paint, see Scuffmaster's Solid Metal Finish. |
| **Exceptionally Durable** | Cleanable, scrub-able and easy to maintain. |
| **Contractor Friendly** | No heavy equipment is required (hand applied) |
| **Textured Finish** | Easy repairs |
| **Quick Order Shipment** | Most orders (even customs) ship within 24 hours |
| **Warranty** | 5 – Year manufacturer's warranty against adhesion failure if product Is correctly applied |
| **Class A fire rated** | Like all Scuffmaster paints, EnviroMetal is Class A fire rated. |

| | | |
| --- | --- | --- |
| **Scrub Rating:** | 2,000 scrubs | ASTM-D2486 |

## WHERE TO SPECIFY ENVIROMETAL

**Corporate Spaces**
Corridors
Lobby areas
Offices
Columns
Rooms

**Retail Spaces**
Interior Walls
Columns
Facades

**Entertainment Facilities**
Interior Walls
Accent Areas
Feature Walls

**Health Facilites**
Interior Spaces
Offices
Columns
Rooms

Remember that Scuffmaster Paints are designed for wall surfaces yet can be applied to display fixtures, elevator doors, stairway frames, columns and other architectural elements besides conventional walls.

Copyright 2017 Master Coating Technologies, Inc.

| | |
|---|---|
| **Suitable Substrates:** | Very smooth surfaces for best results. MCT suggests that new sheetrock be prepared to a Level 5 smoothness in accordance with the Gypsum Association's GA214 standard. |
| **Application:** | Commercial painting contractors. Must be brushed or rolled, depending upon specified finish. Call your Scuffmaster distributor or MCT for details (800) 898-0219. Natural variation (lighter or darker areas) in installed finish is a characteristic of the product. |
| **Custom Colors:** | Yes. No upcharge. Contact your Scuffmaster distributor. |

## TECHNICAL INFORMATION

| | |
|---|---|
| **System Components** | Tinted undercoat (primer/sealer or bonding), base coat (brushed or rolled) |
| **Finish Appearance** | Textured finish. Colors may exhibit natural darker/lighter color shades across wall surface. |
| **Colors Available** | Thousands of colors. Ability to customize |
| **Application** | Commercial painting contractors. Must be brushed or rolled, depending upon specified finish. Call your Scuffmaster distributor or MCT for details (800) 898-0219. |
| **Coverage Rates** | Tinted Undercoat - approximately 450 sq. ft. per gallon<br>Base Coat - approximately 250 sq. ft. per gallon depending on app technique |
| **Maximum VOC** | <150 g/L |
| **Fire Rating** | Under Coat - Class A or 1 (ASTM E-84-91a)<br>Base Coat - Class A or 1 (ASTM E-84-91a) |

## FIVE YEAR LIMITED WARRANTY

Master Coating Technologies warrants the Scuffmaster components of this finish system against manufacturing defect for a period of five years from the date of application when applied to a wall surface according to manufacturer's printed instructions. Manufacturing defect is defined to be a failure of the coating system to adhere to a wall surface when applied according to manufacturer's printed instructions, and does not include subsequent failure or damage caused by exogenous factors such as substrate failure or defect, sharp objects, persons, or acts of God. In the event of a failure resulting from manufacturing defect, the product will be replaced. Master Coating Technologies shall have no obligation to or otherwise participate in labor or other costs associated with replacing the product. This warranty supersedes all previous warranties.

## SAFETY INFORMATION

First Aid: Ingestion – induce vomiting, consult a physician. Skin contact – wash with soap and water. Eye contact – immediately flush eyes for 15 minutes occasionally lifting eyelids. If contact lenses are worn, remove lenses and continue rinsing. Clean lenses before reusing - may not be possible to reuse. Obtain medical attention. Refer to product MSDS and crosslinker MSDS. In case of emergency, call 800-535-5053.

## HOW TO SPECIFY ENVIROMETAL

Specifying a Scuffmaster EnviroMetal finish is easy.

1. Call out the Scuffmaster finish color number in your finish schedule or on drawings. Scuffmaster color numbers are printed below each color chip in standard sample cards and on the reverse of every custom sample.

2. Call out the Scuffmaster system components required for the substrate being painted in the "products" section of your specification. The EnviroMetal finish systems for common substrates are listed below.

Copyright 2017 Master Coating Technologies, Inc.

IMPORTANT: EnviroMetal is a highly reflective finish that, upon application, may exhibit normal color variation that is beyond the control of MCT. Specifically, colors may exhibit slight variation in darkness/lightness upon installation. The degree of surface smoothness prior to product application, applicator technique, and the effects of artificial and natural light sources will also impact the uniformity of finish appearance. New gypsum wallboard may be prepared to a Level 5 finish in accordance with the Gypsum Association's GA214 standard. MCT strongly recommends that specifiers require applicators to prepare a benchmark sample in accordance with PDCA P5-94 "Benchmark Sample Procedure for Paint and Other Decorative Coating Systems." Please refer to the guide specifications for this language.

## ENVIROMETAL PAINT SYSTEMS FOR PROPERLY PREPARED SURFACES

**1. New Sheetrock:**
Prepare to Level 5 finish for best results
Primer - 1 coat Scuffmaster Tinted Undercoat [Primer/Sealer].Ensure very uniform color across surface.
Base Coat - Scuffmaster EnviroMetal [brushed] [rolled] (applied in two coats)

**2. Previously-Painted Surfaces:**
Primer – 1 coat of Scuffmaster Tinted Undercoat [Bonding Primer; Primer/Sealer] Call MCT at 800.898.0219.
Base Coat - Scuffmaster EnviroMetal [brushed] [rolled] (applied in two coats)

**3. Ceramic Tile:**
Primer - 1 coat of Scuffmaster Tinted Undercoat [Bonding Primer]
Base Coat - Scuffmaster EnviroMetal [brushed] [rolled] (applied in two coats)

**4. Primed Metal:**
Primer – 1 coat of Scuffmaster Tinted Undercoat [Bonding Primer]
Base Coat - Scuffmaster EnviroMetal [brushed] [rolled] (applied in two coats)

**5. Un-Primed Metal:**
Primer - Call MCT at (800) 898-0219
Base Coat - Scuffmaster EnviroMetal [brushed] [rolled] (applied in two coats)

Scuffmaster®
Pretty. Tough. Paint.™

Copyright 2017 Master Coating Technologies, Inc.

PT-034

Revision Date:

# SCRUBTOUGH

Scuffmaster®

Pretty. Tough. Paint.™

## MATERIAL SAFETY DATA SHEET

### PRODUCT INFORMATION

**Master Coating Technologies**
**2777 Eagandale Boulevard**
**Eagan, MN 55121**
**800.898.0219**

Trade Name: **ScrubTough**
Chemical Family: Acrylic/Urethane Dispersion

**Medical & Transport Emergency Contact**
**INFOTRAC: 1.800.535.5053**
MSDS Date: 11.24.2009
DOT Classification: Not Regulated
CAS Number: Mixture
Supersedes: All Previous

### PHYSICAL DATA

Boiling Range (F): 212 (water)
Freezing Point (F): 32 (water)
Vapor Density (Air=1): <1
Vapor Pressure (mmHg @ 68° F): 17
Evaporation Rate (Butyl Acetate = 1): 1 (water)
VOC: 49

Solubility in Water: Dilutable
Specific Gravity: 1.2 - 1.3
% Volatile by Weight: 50.9
pH Information: 9.0 - 10.0
Appearance & Odor: Liquid, colors, latex odor

### HAZARDOUS INGREDIENTS

| Ingredient |
|---|
| None |

This paint mixture contains titanium dioxide and/or other pigments classified by ACGIH as "nuisance dusts." Exposures to spray mist or sanding dust should be controlled to below 10mg/m3 through usage of NIOSH/MSHA TC23C or equivalent approved dust lter respirators. Follow respirator manufacturer's directions for use.

**SECTION 313 SUPPLIER NOTIFICATION:** This product contains the following toxic chemicals subject to the reporting requirements of section 313 of the Emergency Planning and Community Right-To-Know Act of 1986 and of 40 CRF 372. NONE above the minimum concentrations.

**HMIS Rating: Health = 1 Flammability = 0 Reactivity = 0 Personal Protection = B***
*User should determine appropriate personal protective equipment based on use conditions

### HEALTH HAZARD DATA

**Entry Routes:** Inhalation, Ingestion, Skin Contact, Eye Contact. Effects of Overexposure: N/A Effects of Inhalation: Trace component, residual monomer and other organics may be irritating to the eyes, skin, mucous membranes, respiratroy tract and may produce symptoms of headache and nausea in poorly ventilated areas. **Effects of Ingestion:** DO NOT INGEST. While aluminum content is non-toxic and the solvents are only slightly toxic by oral ingestion, minute amounts of certain portions of solvents, if aspirated into the lungs during ingestion, may cause severe pulminary injury or death. **Effects of Skin Contact:** Prolonged contact can cause transient reddening of the skin. **Effect of Eye Contact:** Direct contact may be irritating to eyes. **Effects of Repeated Overexposure:** This paint mixture as provided shows no evidence of chronic effects from available information.

## EMERGENCY FIRST AID PROCEDURES

**Eye Contact:** Immediately flush eyes for 15 minutes occasionally lifting eyelids. If victim wears contact lenses, remove lenses and continue rinsing. Clean lenses before reusing. If irritation continues, consult a physician. **Skin Contact:** Wash effected area thoroughly with mild soap and water. If irritation develops and persists, consult a physician. **Inhalation:** Move to fresh air if necessary. If irritation persists, consult a physician. If victim is not breathing, artificial respiration should be administered by qualified personnel. Seek immediate medical attention. **Ingestion:** Give lots of water to dilute, and induce vomiting. If necessary consult a physician.

## FIRE & EXPLOSION HAZARD DATA

Flash Point: Not determined (aqueous system)
LEL: Not determined (aqueous system)
UEL: Not determined (aqueous system)
**Special Fire Fighting Procedures:** Use breathing apparatus when fighting enclosed fires.

**Fire Extinguishing Media:**
Non-Flammable (aqueous emulsion)
If water evaporates, remaining material can burn.
Use all-purpose foam for large fires, and $CO_2$ or dry chemical media for small fires.

**Unusual Fire and Explosion Hazard:**
Products will not burn but may spatter if temperature exceeds boiling point of water. Dried solids can burn, giving off oxides and carbon.

## REACTIVITY DATA

This product is stable under normal (ambient) conditions and hazardous polymerization will not occur. **Hazardous Decomposition Products:** Combustion of dried film may produce carbon dioxide and carbon monoxide. **Conditions or Materials to Avoid:** None.

## SPILL OR LEAK PROCEDURES

**Spill:** Major spills should be collected for disposal. Minor spills may be flushed to sewer if permitted by local, state, and federal regulations. **Waste Disposal:** Incinerate or bury in suitable landfills where permitted by appropriate government regulations.

## SPECIAL PROTECTION INFORMATION

**Respiratory Protection:** Use appropriate MAHA/NIOSH approved respirator in areas with poor ventilation and when exposed to spray mists or sanding dusts. **Ventilation:** General room ventilation is expected to be satisfactory. Use local exhaust if needed for mist or vapor. **Protective Gloves:** Wear gloves impervious to water and soap. **Eye Protection:** Wear goggles if spraying and available eye bath.

**Disclaimer:** The information in this MSDS was obtained from sources we believe are reliable. However, the information is provided without any representation or warranty, expressed or implied, regarding its accuracy or completeness. **The conditions or handling, storage, use and disposal of the product** are beyond our control and may be beyond our knowledge. For this and other reasons, we do not assume responsibility and expressly disclaim liability for loss, damage or expense arising out of or in any way connected with the handling, storage, use or disposal of this product. **Disposal of containers** should be in accordance with applicable federal, state and local laws and regulations.

PT-034
Revision Date:

# MASTERLINK **PLUS**

## MATERIAL SAFETY DATA SHEET

Scuffmaster®
Pretty. Tough. Paint.™

## PRODUCT INFORMATION

**Master Coating Technologies**
**2777 Eagandale Boulevard**
**Eagan, MN 55121**
**800.898.0219**

**Medical & Transport Emergency Contact**
**INFOTRAC: 1.800.535.5053**
MSDS Date: 02.24.2008
Supersedes: All Previous

Trade Name: Masterlink

## PHYSICAL DATA

Boiling Range (F): 212 (water)
Freezing Point (F): 32 (water)
Vapor Density (Air=1): <1
Vapor Pressure (mmHg @ 68° F): 17
Evaporation Rate (Butyl Acetate = 1): 1 (water)

Solubility in Water: Dilutable
Specific Gravity: 1.2 - 1.3
% Volatile by Weight: 50.9
pH Information: 9.0 - 10.0
Appearance & Odor: Liquid, colors, latex odor

## HAZARDOUS INGREDIENTS

| Ingredient | % Concentration by weight | CAS Number |
|---|---|---|
| Polyfunctional aziridine | 99.7 | 064265-57-2 |
| N,n-Dimethyl ethanolamine | .03 | 000108-01-0 |
| Propyleneimine | <0.5 ppm | 000075-55-8 |

Ingredients not precisely identified are either proprietary or non-hazardous. Values are not product specifications.

## HEALTH HAZARD DATA

* As defined by the OSHA Hazard Communication Standard, 29 CFR 1910.1200. See Sections 8 and 11 for exposure guidelines and toxicology information.

**IMPORTANT:** While the following effects are associated with this product and are required to be included on the MSDS by the US OSHA Hazard Communications Standard, they are not expected effects during the foreseeable use of this product in 2% concentration as used in Scuffmaster coatings. As used in Scuffmaster coatings, this product shows GREATLY REDUCED hazards, including reduced potential for eye and skin irritation. However, it is still prudent to minimize contact with eyes and skin, as well as to avoid inhalation of coating mist containing this product.

**EMERGENCY OVERVIEW: PALE YELLOW LIQUID. MILD AMINE ODOR. RESPIRATORY IRRITANT. EYE CORROSIVE. CORROSIVE TO THE GASTROINTESTINAL TRACT. MODERATE SKIN IRRITANT. RESPIRATORY SENSITIZER. SKIN SENSITIZER.**

**POTENTIAL HEALTH HAZARDS: Eye:** This product contains a component(s) that is eye corrosive based on animal studies: This product contains a component(s) that is a moderate skin irritant based on animal studies. This product is likely to induce skin sensitization in humans. A component in this product is a known animal skin sensitizer. **Inhalation:** Vapors and/or aerosols of this material will probably irritate mucous membranes, eyes, nose and respiratory passages. This material may induce respiratory allergy/sensitization. Symptoms include: Cough, tightness in chest, and/or asthmatic wheezing . **Ingestion:** In humans, irritation or chemical burns of the mouth, prhyanx, esophagus, and stomach can develop following ingestion of this material. Injury may be severe and cause death. The acute oral toxicity of this material is between 500 and 5000 mg/kg. Relative to other materials, this material is classied as slightly toxic by ingestion.

## EMERGENCY FIRST AID PROCEDURES

**EYE CONTACT:** Immediately flush eyes with large quantities of running water for a minimum of 15 minutes. Hold the eyelids apart during the flushing to ensure rinsing of the entire surface of the eye and lids with water. Do not attempt to neutralize with chemical agents. Obtain medical attention as soon as possible. Oils and ointments should not be used at this time. Continue the flushing for an additional 15 minutes if a physician is not immediately available. **SKIN CONTACT:** Wash off of skin with plenty of soap and water. If redness, itching or burning sensation develops, get medical attention. Wash contaminated clothing and footwear before reuse. **INGESTION: DO NOT INDUCE VOMITING!** Give one-two glasses of water and refer to medical personnel or take direction from either a physician or poison control center. Never give anything by mouth to an unconscious person. **INHALATION:** Remove victim to fresh air. If not breathing, give artificial respiration, preferably mouth-to-mouth. If breathing is labored, give oxygen. Consult medical personnel. Note to Physician: Mucosal injury following ingestion of this potentially corrosive material contraindicates the induction of vomiting. Medical personnel should evaluate persons with chronic pulmonary disease before those workers handle this product.

## FIRE & EXPLOSION HAZARD DATA

**Flammable Properties:**
Flash Point: > 200˚F, 93˚C Method: Penske-Martin Closed Tester
Autoignition Temperature: No Data

Upper Flammability Limit (UFL): No Data
Lower Flammability Limit (LFL): No Data

**Products of Combustion:** Combustion products: Oxides of carbon and nitrogen. **Extinguishing Media:** Water fog, foam, carbon dioxide, dry chemical, halogenated agents. **Fire Fighting Instructions:** Wear self-contained breathing apparatus with full face piece and protective clothing. **Unusual Fire and Explosion Hazard:** Heat/impurities may cause temperature/build pressure/rupture closed containers, spread fire, increase risk of burns/injuries.

## ACCIDENTAL RELEASE MEASURES

**Spill Procedures:** Wear skin, eye, and respiratory protection during cleanup. Contain spill. Soak up material with absorbent and shovel into a chemical waste container. Decontaminate with 1% acetic acid solution or one part vinegar to four parts water.

## HANDLING & STORAGE

**Handling:** Open large containers in well-ventilated areas to avoid exposure to residual propyleneimine that may have collected in the headspace. Avoid breathing vapors or aerosols. Prevent skin and eye contact. A sensitized individual should not be exposed to the product that caused the sensitization. **Storage:** Keep container tightly sealed. Store in a cool, well ventilated area away from heat, sources of ignition, direct sunlight, acidic materials, anhydrides and strong oxidizers. Avoid contamination with acidic materials, heat, direct sunlight, ultraviolet radiation, strong oxidizing conditions or freezing conditions.

## EXPOSURE CONTROLS / PERSONAL PROTECTION

**Exposure Guidelines:** No ACGIH TLV or OSHA PEL assigned to this product Minimize exposure in accordance with good hygiene practices. **Engineering Controls:** Use permitted ventilation adequate to maintain safe levels. Provide general dilution of local exhaust ventilation to remove solid airborne particles of overspray during spray application and to remove decomposition products during welding or flame cutting on surfaces coated with this product.

We assign NFPA and HMIS ratings to this product based on the hazards of its ingredient(s). Because the customer is most aware of the application of the product, he or she must ensure that the proper personal protective equipment (PPE) is provided consistent with information contained in the product MSDS.*

**NFPA Rating: Health = 3 Flammability = 1 Reactivity = 1 Special = No Data**

****HMIS Rating: Health = 1 Flammability = 0 Reactivity = 0 Personal Protection = B**

* This information is intended solely for the use of individuals trained in the particular hazard rating system.
** See appropriate MSDS section.

## PROTECTIVE EQUIPMENT

**IMPORTANT: While the following effects are associated with this product and are required to be included on the MSDS by the US OSHA Hazard Communications Standard, they are not expected effects during the foreseeable use of this product in 2% concentration as used in Scuffmaster coatings. As used in Scuffmaster coatings, this product shows GREATLY REDUCED hazards, including reduced potential for eye and skin irritation. However, it is still prudent to avoid inhalation of coating mist containing this product, as well as to minimize contact with eyes and skin.**

**RESPIRATORY PROTECTION:** If needed, use NIOSH certified respirator for organic vapors, mists and fumes. Any person who may be exposed to this material in the form of an aerosol or mist from spray operations shall, at a minimum, wear a National Institute for Occupational Safety and Health-approved, category 21c respirator, excluding single use or disposable types, in accordance with 30 CFR 11.130 Subpart K. The respirator shall be equipped with high efficiency particulate filters for maximum protection, unless an air-supplied respirator is selected. Use of this respirator shall be according to Occupational Safety and Health Administration and Mine Safety and Health Administration Regulations at 29 CFR 1910.134 and 30 CFR 11, respectively. If a full-face type respirator is selected and worn, the chemical safety goggles requirement is waived during spray operations. **PROTECTIVE CLOTHING:** Take all precautions to prevent skin contact. Use gloves, arm covers and apron determined to be impervious under the conditions of use. Additional protection, such as full body suit and boots, may be required depending on conditions. Remove contaminated clothing and wash before rewearing. Wash separately from other laundry. **EYE PROTECTION:** Chemical tight goggles and full face shield.

## PHYSICAL AND CHEMICAL PROPERTIES

**Physical State: Liquid**
**Appearance:** Pale Yellow
**Odor:** Mild amine
**Odor Threshold:** No Data
**Boiling Range: No Data**
**Decomposition Temperature:** No Data

**Melting Point:** No Data
**Vapor Pressure (mm Hg at 20˚C):** No Data
**Vapor Density (air = 1):** > 1.0
**Solubility in Water:** Dispersible
**Solubility in Other:** No Data
**Octanol/Water Partition Coefficient:** No Data

**pH:** No Data Basic
**Specific Gravity:** 1.07
**Bulk Density:** No Data
**% Volatile by Volume:** 1
**VOC (%):** 0.50
**Viscosity:** No Data

## STABILITY AND REACTIVITY

**Chemical Stability:** Stable under normal conditions. Unstable at elevated temperatures and pressures, or may react with water or acids with some release of energy, but not violently. **Conditions to Avoid:** Avoid contamination with acidic materials, heat, direct sunlight, ultraviolet radiation, strong oxidizing conditions and freezing conditions. Incompatibility: Acidic materials, anhydrides and strong oxidizers. Hazardous polymerization: May occur if mixed with acidic material. Hazardous decomposition products: Oxides of carbon and nitrogen.

## TOXICOLOGICAL INFORMATION

**Regulated Carcinogen(s):** This product contains no components present at concentrations equal to or greater than o.1% listed by IARC, OSHA, NTP or ACGIH as a carcinogen. **Mutagenicity:** Polyfunctional aziridine: Positive mutagenicity activity has been reported on the azziridine compounds. ( However, mutagenicity is negative at 2% concentration used in Scuffmaster coating applications. )

## ECOLOGICAL INFORMATION

**ECOTOXICITY:** No Data.

**Environmental Fate:** No Data

**Other:** No Data

## DISPOSAL METHOD

Disposal Method: Discarded product is not a hazardous waste under RCRA, but may be regulated by other jurisdictions. Incinerate in approved facility. Do not incinerate in closed containers. Dilute with clean, low viscosity fuel. Untreated material should not be released to the environment. Container Disposal: Empty container retains potentially hazardous residue. Observe all hazard precautions. May contain corrosive material. Do not distribute, make available, furnish or reuse empty container except for storage and shipment of original product. Remove all product residue from container and puncture or otherwise destroy empty container before disposal.

## REGULATION

Not regulated by the US DOT.

## RUGULATION 2

**TSCA ( Toxic Substances Control Act ):** All ingredients are on the TSCA Chemical Substances Inventory. **SARA Title III ( Emergency Planning and Community Right-To-Know Act ):** 313 Reportable ingredients: This product does not contain any chemical subject to the reporting requirements of SARA Section 313. **California Proposition 65 WARNING.** This product contains a chemical known to the State of California to cause cancer. **Product Use:** Resins for coatings applications. This product has been classified in accordance with the hazard criteria of the Controlled Products Regulations (CPR) and the MSDS contains all of the information required by the CPR. **WHMIS Classifications:** Class D – Division 2A – Very Toxic & Class D – Division 2B – Toxic. **California Proposition 65**: NONE.

**Disclaimer:** The information in this MSDS was obtained from sources we believe are reliable. However, the information is provided without any representation or warranty, expressed or implied, regarding its accuracy or completeness. **The conditions or handling, storage, use and disposal of the product** are beyond our control and may be beyond our knowledge. For this and other reasons, we do not assume responsibility and expressly disclaim liability for loss, damage or expense arising out of or in any way connected with the handling, storage, use or disposal of this product. **Disposal of containers** should be in accordance with applicable federal, state and local laws and regulations.

Resilient Base

Issue Date: 28 JUL 2017

Revision Date: 14 FEB 2019

| | |
|---|---|
| Item Name | Wall Base |
| Description: | Resilient rubber wall base; Straight / Toeless profile |
| Manufacturer: | Johnsonite |
| Product #: | DCT4" |
| Color: | 179 Steel |
| Dimensions: | 4" H / 0.125" thickness |
| Lengths: | 4' straight lengths and 100' coiled lengths |
| Corners: | Will not crack, break or show any signs of fatigue when bent around a 1/4" (6.4 mm) diameter cylinder. |
| Quality Standards: | ASTM D 2240: Rubber-85 Shore A; Vinyl-90 Shore A<br>ASTM E 648 / NFPA 253 (Critical Radiant Flux) - Class 1 |
| Lead Time: | Standard lead times are 2-3 weeks from receipt of Purchase Order and Deposit. Lead time is typical and should be verified by the manufacturer. |
| Warranty: | Limited 1 year warranty |
| Note: | Please reference National Pricing Number 04/21/2014 - 10541 as well as the Property Number and Location when ordering this product to obtain the program price. |

## SPECIAL INSTRUCTIONS

MANUFACTURER

JOHNSONITE 800-899-8916

Roxane Spears 781-258-2837 roxane.spears@tarkett.com

ALTERNATE MANUFACTURER 1

ALTERNATE MANUFACTURER 2

ALTERNATE MANUFACTURER 3

AREAS

Public Space

In Touch

Lobby (Re:Mix)

Snack Bar (Re:Fuel)

# RB-008

Revision 4

Resilient Base

Issue Date: 28 JUL 2017

Revision Date: 14 FEB 2019

| | |
|---|---|
| Item Name | Wall Base |
| Description: | Vinyl wall base with rectagular shaped profile with a 45 degree chamfered top |
| Manufacturer: | Johnsonite |
| Product #: | Mandalay 4-1/2" (MW-XX-H) |
| Color: | 48 Grey |
| Dimensions: | 4-1/2" H x 3/8" thickness |
| Lengths: | 8' straight lengths; 40' per carton |
| Corners: | Will not crack, break or show any signs of fatigue when bent around a 1/4" (6.4 mm) diameter cylinder |
| Quality Standards: | ASTM D 2240: Rubber-85 Shore A; Vinyl-90 Shore A<br>ASTM F-1861, Type TP, Group 1 (solid) |
| Lead Time: | Standard lead times are 2-3 weeks from receipt of Purchase Order and Deposit. Lead time is typical and should be verified by the manufacturer. |
| Warranty: | Limited 2-Year Warranty |
| Note: | Please reference National Pricing Number 04/21/2014 - 10541 as well as the Property Number and Location when ordering this product to obtain the program price. |

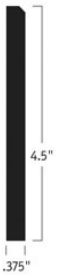


## SPECIAL INSTRUCTIONS

MANUFACTURER

JOHNSONITE 800-899-8916

Roxane Spears 781-258-2837 roxane.spears@tarkett.com

ALTERNATE MANUFACTURER 1

ALTERNATE MANUFACTURER 2

ALTERNATE MANUFACTURER 3

AREAS

Public Space

Meeting (Tactic)

# RB-009

Revision 4

Resilient Base

Issue Date: 28 JUL 2017

Revision Date: 14 FEB 2019

| | |
|---|---|
| Item Name | Wall Base |
| Description: | Vinyl wall base with rectangular shaped profile with a 45 degree chamfered top |
| Manufacturer: | Johnsonite |
| Product #: | Mandalay 4-1/2" (MW-XX-H) |
| Color: | 29 Moon Rock |
| Dimensions: | 4-1/2" H x 3/8" thickness |
| Lengths: | 8' straight lengths; 40' per carton |
| Corners: | Will not crack, break or show any signs of fatigue when bent around a 1/4" (6.4 mm) diameter cylinder. |
| Quality Standards: | ASTM D 2240: Rubber-85 Shore A; Vinyl-90 Shore A<br>ASTM F-1861, Type TP, Group 1 (solid) |
| Lead Time: | Standard lead times are 2-3 weeks from receipt of Purchase Order and Deposit. Lead time is typical and should be verified by the manufacturer. |
| Warranty: | Limited 2-Year Warranty |
| Note: | Please reference National Pricing Number 04/21/2014 - 10541 as well as the Property Number and Location when ordering this product to obtain the program price. |

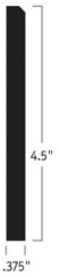


## SPECIAL INSTRUCTIONS

MANUFACTURER

Mannington

David Baird 919-623-7139

ALTERNATE MANUFACTURER 1

ALTERNATE MANUFACTURER 2

ALTERNATE MANUFACTURER 3

AREAS

Public Space

Fitness Center (Re:Charge)

Issue Date: 28 JUL 2017

Revision Date: 14 FEB 2019

| | |
|---|---|
| Item Name | Wall Base |
| Description: | Toeless carpet wall base |
| Manufacturer: | Johnsonite |
| Product #: | TightLock Carpet 4.5" (TCB-XXX-45) |
| Color: | 179 Steel |
| Dimensions: | 1/4" D x 4-1/2" H |
| Lengths: | 4' straight lengths; 75' coiled lengths |
| Corners: | Will not crack, break or show any signs of fatigue when bent around a 1/4" (6.4 mm) diameter cylinder |
| Quality Standards: | ASTM D 2240: Rubber-85 Shore A; Vinyl-90 Shore A<br>ASTM F-1861, Type TP, Group 1 (solid) |
| Lead Time: | Standard lead times are 2-3 weeks from receipt of Purchase Order and Deposit. Lead time is typical and should be verified by the manufacturer. |
| Warranty: | Limited 2-Year Warranty |
| Note: | Please reference National Pricing Number 04/21/2014 - 10541 as well as the Property Number and Location when ordering this product to obtain the program price. |

## SPECIAL INSTRUCTIONS

MANUFACTURER

JOHNSONITE 800-899-8916

Roxane Spears 781-258-2837 roxane.spears@tarkett.com

ALTERNATE MANUFACTURER 1

ALTERNATE MANUFACTURER 2

ALTERNATE MANUFACTURER 3

AREAS

See Area Addendum

# RB-010

Revision 4

Resilient Base

| | | | |
|---|---|---|---|
| Project: | Public Spaces | Issue Date: | 07/28/2017 |
| Project #: | ALOFT Hotels G4.0 | Revision Date: | 14 FEB 2019 |

Public Space

| Location | Locations | Qty/Location | Total |
|---|---|---|---|
| BOH Corridor | 0 | 0.00 | 0.00 |
| Break Room | 0 | 0.00 | 0.00 |
| Chute | 0 | 0.00 | 0.00 |
| Clean | 0 | 0.00 | 0.00 |
| Data Center | 0 | 0.00 | 0.00 |
| Electrical | 0 | 0.00 | 0.00 |
| Elevator Machine Room | 0 | 0.00 | 0.00 |
| Employee Toilet (w/c) | 0 | 0.00 | 0.00 |
| Engineer | 0 | 0.00 | 0.00 |
| Food Prep | 0 | 0.00 | 0.00 |
| Food Prep Storage | 0 | 0.00 | 0.00 |
| GM Office | 0 | 0.00 | 0.00 |
| Housekeeping (Re:Fresh) | 0 | 0.00 | 0.00 |
| Ice | 0 | 0.00 | 0.00 |
| Janitor | 0 | 0.00 | 0.00 |
| Laundry | 0 | 0.00 | 0.00 |
| Linen | 0 | 0.00 | 0.00 |
| Luggage | 0 | 0.00 | 0.00 |
| Mechanical | 0 | 0.00 | 0.00 |
| Pool Equipment Room | 0 | 0.00 | 0.00 |
| Pool Storage | 0 | 0.00 | 0.00 |
| Stair | 0 | 0.00 | 0.00 |
| Storage | 0 | 0.00 | 0.00 |
| W XYZ Storage | 0 | 0.00 | 0.00 |
| Work Area | 0 | 0.00 | 0.00 |

Resilient Flooring

Issue Date: 28 JUL 2017

Revision Date: 14 FEB 2019

| | |
|---|---|
| Item Name | Fitness Flooring |
| Description: | Woven vinyl flooring |
| Manufacturer: | BOLON |
| Product: | Bolon Botanic |
| Color: | Kale |
| Content: | Vinyl with 2% polyester and fiberglass mesh |
| Backing: | Vinyl backing with polyester and fiberglass mesh (recycled content varies) |
| Roll Size: | 19.65"x19.65" tile |
| Thickness: | 2.4 mm overall |
| Layout: | See Plan |
| Cushion: | Underlayment optional. Refer to specification RF-003. |
| Weight: | 0.78-0.80 LB |
| Slip Resistance: | >0.3 |
| Quality Standards: | ASTM E648 Class I<br>ASTM E662 Pass |
| Lead Time: | Standard lead time is 4 weeks upon receipt of Purchase Order and Deposit. Lead time is typical and should be verfied by the manufacturer. |
| Warranty: | 15 years |
| Eco-Feature(s) *as per manufacturer: | LEED Certified, 100% Recycled Content |

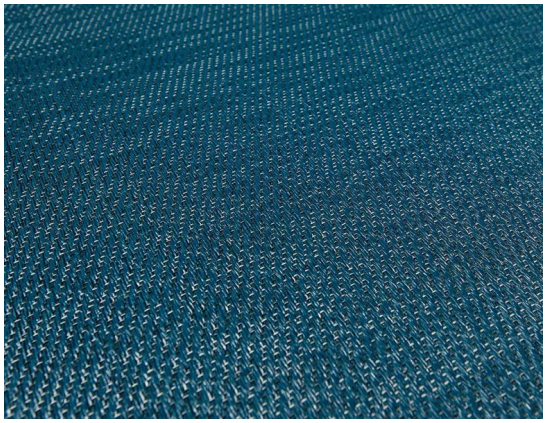

## SPECIAL INSTRUCTIONS

MANUFACTURER

Bolon

Jim Cave 781-964-5456 jcave@mi-studios.com

ALTERNATE MANUFACTURER 1

ALTERNATE MANUFACTURER 2

ALTERNATE MANUFACTURER 3

AREAS

Public Space

Fitness Center (Re:Charge)

Issue Date: 28 JUL 2017

Revision Date: 29 JAN 2018

| | |
|---|---|
| Item Name | Fitness Flooring Pad (Optional) |
| Description: | Cushion underlayment that provides sound absorption and added cushion for sports and fitness facilities |
| Manufacturer: | Mats Inc. |
| Product: | Quiet cushion underlayment |
| Color: | Not applicable |
| Content: | PVC underfoam floor covering |
| Backing: | Not applicable |
| Roll Size: | Approximately 6'-7" W x 68'-8" L |
| Thickness: | 4.0 mm |
| Weight: | Approximately 0.45 lbs / sq ft |
| Slip Resistance: | Not applicable |
| Quality Standards: | ISO 140-8 16 dB<br>ASTM E413 STC: 54<br>ASTM E648 Class I<br>ASTM E662 Pass |
| Lead Time: | Standard lead times are 1-2 weeks upon receipt of Purchase Order and Deposit. Lead times are typical and should be verified by the manufacturer. |
| Warranty: | 5 years |
| Eco-Feature(s) *as per manufacturer: | Low-Emitting adhesive With a VOC of 70 g/L or less for multipurpose adhesive |

## SPECIAL INSTRUCTIONS

MANUFACTURER

| | | |
|---|---|---|
| MATS INC | 800-628-7462 | |
| Jim Cave | 800-628-7462, x210 | jcave@matsinc.com |

ALTERNATE MANUFACTURER 1

ALTERNATE MANUFACTURER 2

ALTERNATE MANUFACTURER 3

AREAS

Public Space

Fitness Center (Re:Charge)

Issue Date: 28 JUL 2017

Revision Date: 29 JAN 2018

| | |
|---|---|
| Item Name | Resilient Flooring |
| Description: | Resilient tile flooring at BOH floors |
| Manufacturer: | Armstrong - Commercial Flooring |
| Product: | Standard Excelon Imperial Texture (51839) |
| Color: | Fortress White |
| Content: | Vinyl composition tile |
| Tile Size: | 12" x 12" |
| Thickness: | 1/8" (3.2 mm) |
| Weight: | Approximately 63 lbs/carton (28.6 kg) |
| Quality Standards: | ASTM E 648 Critical Radiant Flux Class I - 0.45 or more watts/cm2<br>ASTM E 662 Smoke Developed 450 or less<br>Static Load Limit - ASTM F 970 125 psi |
| Lead Time: | Standard lead times are 1-2 weeks from receipt of Purchase Order and Deposit. Lead time is typical and should be verified by the manufacturer. |
| Warranty: | 5-year commercial warranty when installed in accordance with Armstrong's Guaranteed Installation Systems manual, F-5061 |
| Eco-Feature(s) *as per manufacturer: | CDPH v1.1 (2017) a.k.a. CHPS 01350 - FloorScore/SCS (low-emitting material)<br>ISO 14025 - Yes/ASTM International (environmental product declaration)<br>ISO 9001 - Yes/SAI Global (plant quality)<br>CDPH v1.1 (2017) a.k.a. CHPS 01350 - <0.5 mg/m(3) (TVOC Range)<br>SCAQMD Rule #1168 - Less than 50 g/L (low-emitting adhesives)<br>LEED v4 - Content disclosure to 1000 ppm (material ingredients, option 1)<br>ISO 14021 - Contains recycled content (recycled content) |

## SPECIAL INSTRUCTIONS

MANUFACTURER

Armstrong - Commercial Flooring

Anthony R. Lawson 404-841-1927 arlawson@armstrong.com

ALTERNATE MANUFACTURER 1

ALTERNATE MANUFACTURER 2

ALTERNATE MANUFACTURER 3

AREAS

See Area Addendum

# RF-005

Revision 1

Resilient Flooring

| | | | |
|---|---|---|---|
| Project: | Public Spaces | Issue Date: | 07/28/2017 |
| Project #: | ALOFT Hotels G4.0 | Revision Date: | 01/29/2018 |

| Public Space |
|---|
| Location |
| Break Room |
| Elevator Machine Room |
| Housekeeping (Re:Fresh) |
| Ice |
| Laundry |
| Linen |
| Storage |

Issue Date: 14 FEB 2019

Revision Date:

| | |
|---|---|
| Item Name | Fitness Flooring |
| Description: | Woven Vinyl Flooring |
| Manufacturer: | Bolon |
| Product: | Bolon Botanic |
| Color: | Osier |
| Content: | Vinyl with 2% polyester and fiberglass mesh |
| Backing: | Vinyl backing with polyester and fiberglass mesh (recycled content varies) |
| Roll Size: | 19.65"x19.65" tile |
| Thickness: | 2.4 mm overall |
| Weight: | 0.78-0.80 LB |
| Slip Resistance: | >0.3 |
| Quality Standards: | ASTM E648 Class I<br>ASTM E662 Pass |
| Lead Time: | Standard lead time is 4 weeks upon receipt of Purchase Order and Deposit. Lead time is typical and should be verified by the manufacturer. |
| Warranty: | 15 Years |
| Eco-Feature(s) *as per manufacturer: | LEED certified, 100% Recycled Content |

## SPECIAL INSTRUCTIONS

MANUFACTURER

Bolon

Jim Cave 781-964-5456 jcave@mi-studios.com

ALTERNATE MANUFACTURER 1

ALTERNATE MANUFACTURER 2

ALTERNATE MANUFACTURER 3

AREAS

Public Space

Fitness Center (Re:Charge)

Tile Base

**ALOFT Hotels G4.0-Public Spaces**

**G4.0**

**BUILDING PRODUCT MANUAL**

# TB-003

Revision 4

Tile Base

Issue Date: 28 JUL 2017

Revision Date: 14 FEB 2019

| | |
|---|---|
| Item Name | Wall Base Tile |
| Manufacturer: | Ceramic Technics |
| Product: | Vogue Bullnose |
| Color: | Corallo |
| Dimensions: | 4"x8" |
| Material: | Porcelain (through body) |
| Finish: | Matte |
| Lead Time: | To be Verified |
| Warranty: | One year warranty of installation |
| Eco-Feature(s) *as per manufacturer: | Not Applicable |

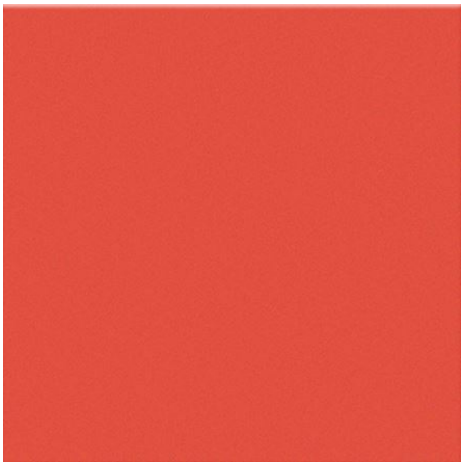

## SPECIAL INSTRUCTIONS

MANUFACTURER

| | | |
|---|---|---|
| Ceramic Technics | 770-740-0050 | |
| Corey Turnage or Mary Beth Tallant | 804.658.9955 or 770.891.0684 | cturnage@ceramictechnics.com or mtallant@ceramictechnics.com |

ALTERNATE MANUFACTURER 1

ALTERNATE MANUFACTURER 2

ALTERNATE MANUFACTURER 3

AREAS

Public Space

Pool (Splash) Restroom (w/c)

**ALOFT Hotels G4.0-Public Spaces**

**G4.0**

**BUILDING PRODUCT MANUAL**

# TB-004

Tile Base

Issue Date: 14 FEB 2019

Revision Date:

| | |
|---|---|
| Item Name | Wall Base Tile |
| Manufacturer: | Creative Materials Corporation |
| Product: | Sediment Bullnose |
| Dimensions: | 3"x12" |
| Material: | Porcelain Through Body |
| Color: | Dark Grey |
| Finish: | Matte |
| Lead Time: | 1-2 Weeks |
| Warranty: | Warranty to cover products purchased for up to 12 months from the date of shipment. |
| Eco-Feature(s) *as per manufacturer: | N/A |

## SPECIAL INSTRUCTIONS

MANUFACTURER

Creative Materials Corporation

Jessica Sheldon (518)713-5368 JSheldon@creativematerialscorp.com

ALTERNATE MANUFACTURER 1

ALTERNATE MANUFACTURER 2

ALTERNATE MANUFACTURER 3

AREAS

Tile Ceiling

# TC-001

Revision 4

Tile Ceiling

Issue Date: 28 JUL 2017

Revision Date: 14 FEB 2019

| | |
|---|---|
| Item Name | Acoustical Ceiling Tile |
| Manufacturer: | Armstrong Ceilings |
| Product: | TECTUM Direct-Attach Walls |
| Dimensions: | 36" x 48"<br>2" Custom Thickness |
| Edge: | Unfinished |
| Grid: | C |
| Suspension: | DX/DXL |
| Content: | TECTUM Wood Fiber |
| Finish: | Smooth |
| Color: | Custom Paint Color to Match Benjamin Moore Color Kendall Charcoal #HC-166 |
| Quality Standards: | Class A Fire Rating |
| Lead Time: | To be verified |
| Warranty: | TBD |

## SPECIAL INSTRUCTIONS

MANUFACTURER

Armstrong World Industries, Inc. 1-800-233-3823

Maureen Cone (703) 389-2701 mmcone@armstrong.com

ALTERNATE MANUFACTURER 1

ALTERNATE MANUFACTURER 2

ALTERNATE MANUFACTURER 3

AREAS

Public Space

Meeting (Tactic)

**ALOFT Hotels G4.0-Public Spaces**

**G4.0**

**BUILDING PRODUCT MANUAL**

# TC-002

Tile Ceiling

Issue Date: 28 JUL 2017

Revision Date:

| | |
|---|---|
| Item Name | Acoustical Ceiling Tile |
| Manufacturer: | Armstrong - Building Products |
| Product: | Cirrus Tegular |
| Dimensions: | 2'-0" x 2'-0" x 3/4" |
| Edge: | 15/16" angled tegular |
| Grid: | Exposed tee |
| Suspension: | 15/16" standard prelude |
| Content: | Material: Wet formed mineral fiber<br>Surface Finish: Factory applied latex paint |
| Finish: | Medium texture |
| Color: | White |
| Quality Standards: | Fire Class A |
| Lead Time: | Standard lead times are 1-2 weeks from receipt of Purchase Order and Deposit. Lead time is typical and should be verified by the manufacturer. |
| Warranty: | 30 year performance guarantee and warranty against visible sag, mold and mildew |
| Eco Feature(s) *as per manufacturer: | Total recycled content based on product composition of post-consumer and pre-consumer (post-industrial) recycled content per FTC guidelines. |

## SPECIAL INSTRUCTIONS

MANUFACTURER

Armstrong World Industries, Inc. 1-800-233-3823

Maureen Cone (703) 389-2701 mmcone@armstrong.com

ALTERNATE MANUFACTURER 1

ALTERNATE MANUFACTURER 2

ALTERNATE MANUFACTURER 3

AREAS

Public Space

Break Room

Employee Toilet (w/c)

GM Office

Work Area

Data Center

# TC-003

Tile Ceiling

Issue Date: 28 JUL 2017
Revision Date:

| | |
|---|---|
| Item Name | Acoustical Ceiling Tile |
| Manufacturer: | Armstrong - Building Products |
| Product: | ARMATUFF |
| Dimensions: | 2'-0" x 2'-0" x 3/4" |
| Edge Profile: | 15/16" square lay-in |
| Suspension: | 15/16" standard prelude |
| Content: | Material: Wet formed high density mineral fiber<br>Surface Finish: Factory applied latex paint |
| Finish: | Medium Texture |
| Color: | White |
| Quality Standards: | Class A Fire Rating<br>ASTM Classification: Type III, Form: 2, Pattern: C E |
| Lead Time: | Standard lead times are 1-2 weeks from receipt of Purchase Order and Deposit. Lead time is typical and should be verified by the manufacturer. |
| Warranty: | 30 year performance guarantee and warranty against visible sag, mold and mildew |
| Eco Feature(s) *as per manufacturer: | Up to 40% recycled content |

## SPECIAL INSTRUCTIONS

MANUFACTURER

Armstrong World Industries, Inc. 1-800-233-3823

Maureen Cone (703) 389-2701 mmcone@armstrong.com

ALTERNATE MANUFACTURER 1

ALTERNATE MANUFACTURER 2

ALTERNATE MANUFACTURER 3

AREAS

Public Space

Food Prep

Food Prep Storage

# Tile Ceiling

Cutsheets

TC-001
Revision Date:

# TECTUM® Direct-Attach

## Acoustical Ceiling & Wall Panels
coarse texture

CAD/Revit® drawings at:
armstrongceilings.com

Tectum® Direct-Attach ceiling panels in White

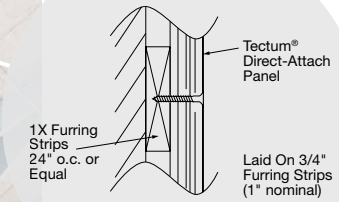


plus... capabilities to do more

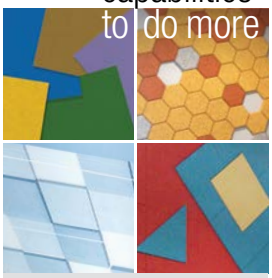

armstrongceilings.com/capabilities
See more photos at:
armstrongceilings.com/photogallery

Tectum® Direct-Attach ceiling and wall panels provide durable, sustainable, acoustical options for a wide variety of applications.

### KEY SELECTION ATTRIBUTES

- Now, long edges beveled, short edges beveled available as a standard option
- Durable for heavy-use interiors
- Great retrofit solution for noise reduction
- Excellent noise absorption – NRC up to 0.85
- Tectum® 1" panels are part of the Sustain™ portfolio and meet the most stringent sustainability standards today
- Can be field painted up to six times without impacting acoustic or fire performance
- Wide variety of color options available, including made-to-order Colorations® colors and Sherwin-Williams® colors
- Can be mechanically fastened to a wide variety of surfaces including masonry, drywall, wood, and more

### TYPICAL APPLICATIONS

- Gymnasiums
- Auditoriums
- Multi-purpose Spaces
- Exposed Structures
- Acoustical Retrofits
- Education Spaces

### COLORS
Due to printing limitations, shade may vary from actual product.

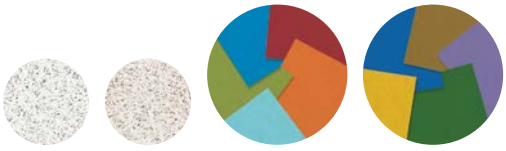
White (TWH)
Natural (TNA)
Made-to-order Colorations® Colors Available
Made-to-order Sherwin-Williams® Colors Available

Note: Colorations® colors and panels greater than 1" thick are not included in Sustain™ portfolio.

### LINE DESIGN CAPABILITIES
Available through special order.

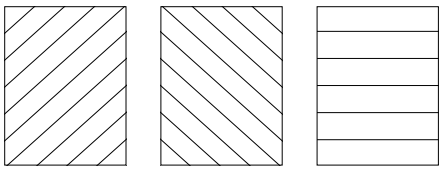
Diagonal Right Line-Design Panel
Diagonal Left Line-Design Panel
Horizontal Line-Design Panel

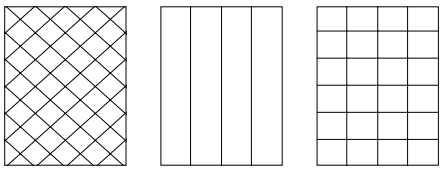
Diamond Line-Design Panel
Vertical Line-Design Panel
Grid Line-Design Panel

### DETAILS

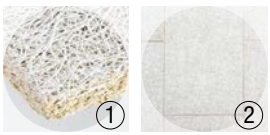


1. Tectum® Direct-Attach Panel in White
2. Tectum® Direct-Attach Panels in White

Note: Panel edges are unfinished.

TechLine 877 276 7876
armstrongceilings.com/tectum

Armstrong® CEILING & WALL SOLUTIONS

TC-001

Revision Date:

# TECTUM® Direct-Attach

## Acoustical Ceiling & Wall Panels

coarse texture

Declare℠ Living Building Challenge Compliant

SUSTAIN™ High Performance Sustainable Ceiling Systems

FSC www.fsc.org FSC® C007626 The mark of responsible forestry

For LEED contribution visit armstrongceilings.com/greengenie

LEED: energy management; construction waste mgmt; regional materials ✓; design for flexibility; EPD ✓; recyclable/ extended producer resp. ✓; biobased materials; FSC (for wood) ✓; recycled content; sourcing of raw materials ✓; material ingredient reporting ✓; low emitting/ materials ✓; lighting quality; acoustics

▲ LOCATION DEPENDENT

NRC DEF

## VISUAL SELECTION

| Edge Profile | Item No. ◆ | Dimensions Nominal W x L x H (Inches) | |
|---|---|---|---|
| **TECTUM® Direct-Attach Ceiling & Wall Panels** | | | |
| Long Edges Beveled/ Short Edges Square | **8182T10_ _ _** | 23-3/4 x 48 x 1" | ▭ |
| | **8181T10_ _ _** | 23-3/4 x 96 x 1" | ▭ |
| | **8180T10_ _ _** | 47-3/4 x 96 x 1" | ▭ |
| Long Edges Beveled/ Short Edges Beveled | **8175T10_ _ _** | 23-3/4 x 48 x 1" | ▭ |
| | **8174T10_ _ _** | 23-3/4 x 96 x 1" | ▭ |
| | **8173T10_ _ _** | 47-3/4 x 96 x 1" | ▭ |
| | **Other Size Panels** | W 23-3/4" – 48" L: 12" – 144" 1", 1-1/2", or 2" thickness | |

◆ When specifying or ordering, include the appropriate 3-digit color suffix TNA = Natural TWH = White (e.g. 8182T10 T W H )

Four-sided beveled edge panels are recommended in adjoining panel installation

## PERFORMANCE SELECTION

Dots represent high level of performance.

| Fire Rating | Light Reflect (White Only) | Anti-Mold & Mildew BioBlock | Sag Resist Humi-Guard+ | Certified Low VOC Emissions | Impact (Durability) | Scratch (Durability) | 30-Yr Warranty |
|---|---|---|---|---|---|---|---|
| Class A | Up to 0.75 | • | • | • | • | • | • |
| Class A | Up to 0.75 | • | • | • | • | • | • |
| Class A | Up to 0.75 | • | • | • | • | • | • |
| Class A | Up to 0.75 | • | • | • | • | • | • |
| Class A | Up to 0.75 | • | • | • | • | • | • |
| Class A | Up to 0.75 | • | • | • | • | • | • |
| Class A | Up to 0.75 | – | – | – | • | • | • |

## ACOUSTICAL INFORMATION

| Panel Thickness | NRC | Mounting Method |
|---|---|---|
| 1" | 0.40 | A |
| | 0.45 | D-20 |
| | 0.80 | C-20 |
| | • | |
| | 0.85 | C-40 |
| | • | |
| 1-1/2" | 0.55 | A |
| | 0.60 | D-20 |
| | 0.90 | C-20 |
| | • | |
| | 0.95 | C-40 |
| | • | |
| 2" | 0.60 | A |
| | 0.70 | D-20 |
| | • | |
| | 0.95 | C-20 |
| | • | |
| | 1.00 | C-40 |
| | • | |

## ACCESSORIES

| Item No. ◆ | Description | Quantity |
|---|---|---|
| **8187L16_ _ _** | #6 x1-5/8" Painted Head – Sharp point Screws | 1000/ctn |
| **8188L16_ _ _** | #6 x1-5/8" Painted Head – Drill point Screws | 1000/ctn |
| **8189L22_ _ _** | 2-1/4" Painted Head – CMU Screws | 500/ctn |

◆ When specifying or ordering, include the appropriate 3-digit color suffix TNA = Natural; TWH = White (e.g. 8187L16 T W H )
Consult installation instructions for fastener guidance.

NOTE: Projects may require alternative screw lengths and types depending on site conditions. Please consult installation instructions for guidance.

## ACOUSTICAL MOUNTING METHODS

Mounting A

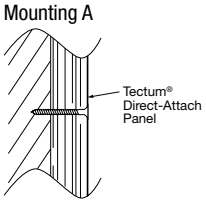


Mounting D-20

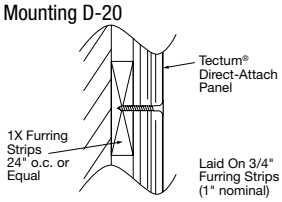


Mounting C-20

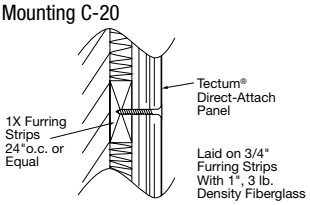


Mounting C-40

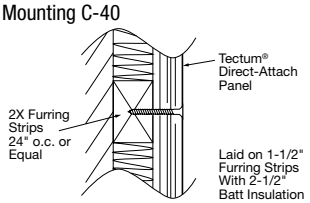


## PHYSICAL DATA

**Material**
Cementitious Wood Fiber; FSC®-cerified (COC-003601). For more information about FSC®-certified fire-retardant products, or to view our FSC®-certification letter, contact TechLine at 1 877 276 7876.

**Surface Finish**
Factory-applied latex paint with Silicate surface coating for abuse resistance. Natural is unpainted.

**Fire Performance**
Class A per IBC. Flame Spread Index 25 or less and Smoke Developed Index 50 or less when tested in accordance with ASTM E84.

CAN/ULC S102 surface burning characteristics. Flame Spread Index of 25 or less and Smoke Developed Index of 50 or less (painted, face only).

**VOC Emissions**
Third-party certified compliant with California Department of Public Health CDPH/EHLB/Standard Method Version 1.1, 2010. This standard is the guideline for low emissions in LEED®, CalGreen Title 24, ANSI/ASHRAE/USGBC/IES Standard 189; ANSI/GBI Green Building Assessment Protocol.

Tectum® panels meet CDPH guidelines in enclosed office at 50% wall coverage. View certificate details at armstrongceilings.com/tectum.

**Humidity/Sag Resistance**
HumiGuard® Plus performance panels are recommended for areas subject to high humidity, up to, but not including, standing water and outdoor applications.

**Mold/Mildew Protection**
Ceiling panels with BioBlock® performance resist the growth of mold and mildew.

**Installation Considerations**
Panels must be mechanically attached to approved substrate per installation instructions. To achieve proper finished visual panels should be installed in an ashlar pattern. Four-sided beveled edge panels are recommended in adjoining panel installations.

Use caution and wear appropriate hand, eye, and dust mask protection when cutting and installing Tectum® panels. Refer to installation instructions for complete details and cutting recommendations.

**Primary (Embodied) Energy**
See all LCA information on our EPDs.

**Application Considerations**
Color variation among panels is common due to the natural characteristics of the wood on White and Natural panels.

Wood fibers may appear orange on Natural colored panels due to the characteristics of the wood.

**Design Considerations**
For walls that may experience condensation or moisture, such as uninsulated exterior walls, D- or C- mounting is required to create a gap between the structure and the panel.

**Design Support**
Project management assistance is available by calling TechLine at 1 877 276 7876.

**Seismic Restraint**
Tectum Direct Attach panels are approved for application in all seismic areas when installed per Armstrong Ceilings Installation Instructions.

**Warranty**
30-Year Warranty. Details at armstrongceilings.com

**Weight, Pcs and SF/Pallet**
1" – 1.65 lbs/SF
8180T10 – 36 pcs/pallet; 1,152 SF/pallet
8181T10 – 72 pcs/pallet; 1,152 SF/pallet
8182T10 – 72 pcs/pallet; 572 SF/pallet
8173T10 – 36 pcs/pallet; 1,152 SF/pallet
8174T10 – 72 pcs/pallet; 1,152 SF/pallet
8175T10 – 72 pcs/pallet; 572 SF/pallet

LEED® is a registered trademark of the U.S. Green Building Council
Sherwin-Williams® is a registered trademark of The Sherwin-Williams Company. Revit® is a registered trademark of Autodesk, Inc.
Declare℠ is a service mark of International Living Future Institute
FSC® is a registered trademark of FSC Forest Stewardship Council®, A.C., license code FSC-C007626. All other trademarks used herein are the property of AWI Licensing LLC and/or its affiliates.
© 2018 AWI Licensing LLC
Printed in the United States of America

**Tech**Line / 1 877 276 7876
armstrongceilings.com/tectum

BPCS-5599-318

Armstrong® CEILING & WALL SOLUTIONS

DIRECT-TO-DECK & WALLS

TC-002
Revision Date:

# CIRRUS®
# CIRRUS® High NRC

Tegular
medium texture

TOTAL ACOUSTICS™

10-YEAR REPLACEMENT PANEL AVAILABILITY
584, 589

Cirrus® Beveled Tegular panels with Suprafine® 9/16" suspension system (Pgs. 287-288)

cloud friendly

See more photos at:
armstrongceilings.com/photogallery
SEARCH: cirrus

Cirrus offers a medium-textured ceiling panel with excellent noise reduction and sound blocking for Total Acoustics™ performance in one product.

## KEY SELECTION ATTRIBUTES

- Get total noise control and design flexibility with Total Acoustics™ ceiling panels: NRC + CAC = Total Acoustics™ performance
- Refined visual
- Excellent combination of acoustical performance: NRC (up to 0.75) and CAC (35)
- High NRC items feature Articulation Class (170) helpful to control sound over wall partitions
- Ceiling-2-Ceiling™ post-consumer recycled content options. Items 589HRC, 539HRC, 584HRC, 535HRC. 71% pre-consumer; 15% post-consumer
- USDA Certified Biobased Product – 94%

## TYPICAL APPLICATIONS

- Offices – closed spaces for privacy and confidentiality; open spaces for focus, collaboration, and teaming
- Healthcare – assists in addressing HIPAA, HCAHPS, and FGI acoustical requirements
- Conference rooms
- Lobbies
- Libraries/media centers
- Computer rooms

## COLORS

Due to printing limitations, shade may vary from actual product.

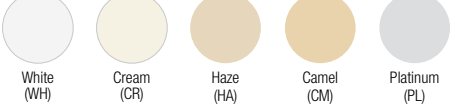


Items 584, 589 are available in colors.
All other items are available in White only.
Colored ceilings are dye-lotted and should be segregated by dye lot. Do not mix.

## DETAILS

(Other Suspension Systems compatible. Refer to listing on page 162.)

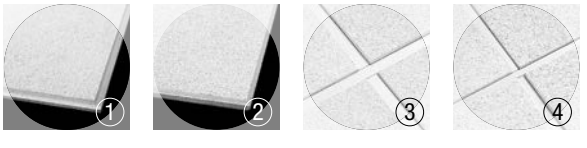


1. Cirrus Angled Tegular
2. Cirrus Beveled Tegular
3. Cirrus Angled Tegular with Prelude® 15/16" suspension system
4. Cirrus Beveled Tegular with Suprafine 9/16" suspension system

TC-002

Revision Date:

# CIRRUS®
# CIRRUS® High NRC

Tegular
medium texture

USDA CERTIFIED BIOBASED PRODUCT PRODUCT 94%

UP TO 86% RECYCLED CONTENT

Calculate LEED contribution at armstrongceilings.com/greengenie

LEED®: energy management; construction waste mgmt; regional materials; design for flexibility; EPD; recyclable/ extended producer resp.; biobased materials; recycled content; sourcing of raw materials; material ingredient reporting; low emitting/ materials; lighting quality; acoustics

▲ LOCATION DEPENDENT

## VISUAL SELECTION

## PERFORMANCE SELECTION

Dots represent high level of performance. $$$$

| Edge Profile | Susp. Dwg. Pgs. 295-299 armstrongceilings.com/ catdwgs | Item No. | Dimensions (Inches) | UL Classified Acoustics NRC | UL Classified Acoustics CAC | Total Acoustics[1] NRC+CAC | Articulation Class AC | Fire Rating | Light Reflect | Anti-Mold & Mildew Bio-Block | Sag Resist Humi-Guard+ | Certified Low VOC Emissions | Durability | Recycled Content | Recycle Program | 30-Yr Warranty |
|---|---|---|---|---|---|---|---|---|---|---|---|---|---|---|---|---|
| **CIRRUS® High NRC** | | | | | | | | | | | | | | | | |
| 15/16" Angled Tegular | 13 | **556** | 24 x 24 x 7/8" ☐ | 0.75 • | 35 • | BETTER | 170 • | Class A | 0.85 • | • | • | • | Std | • | • | • |
| | 13 | **551** | 24 x 48 x 7/8" ▭ | 0.75 • | 35 • | BETTER | 170 • | Class A | 0.85 • | • | Std | • | Std | • | • | 10-Yr |
| | 13 | **Other Size Panels** | W: 4" - 24" / L: 4" - 48" 7/8" thick | N/A | N/A | – | N/A | Class A | 0.85 • | • | Std | • | Std | • | • | 10-Yr |
| 9/16" Beveled Tegular | 29, 44, 48, 52, 56, 60 | **558** | 24 x 24 x 7/8" ☐ | 0.75 • | 35 • | BETTER | 170 • | Class A | 0.85 • | • | • | • | Std | • | • | • |
| | 29, 44, 48, 52, 56, 60 | **568** | 24 x 48 x 7/8" ▭ | 0.75 • | 35 • | BETTER | 170 • | Class A | 0.85 • | • | Std | • | Std | • | • | 10-Yr |
| | 29, 44, 48, 52, 56, 60 | **Other Size Panels** | W: 4" - 24" / L: 4" - 48" 7/8" thick | N/A | N/A | – | N/A | Class A | 0.85 • | • | Std | • | Std | • | • | 10-Yr |

[1] Total Acoustics™ ceiling panels have an ideal combination of noise reduction and sound-blocking performance in one product.
**GOOD** (NRC 0.60-0.65; CAC 35+) **BETTER** (NRC 0.70-0.75; CAC 35+) **BEST** (NRC 0.80+; CAC 35+)

## SUSPENSION SYSTEMS

15/16"

Prelude®

9/16"

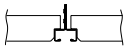

Silhouette® 1/4" Reveal

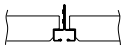

Silhouette 1/8" Reveal

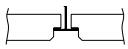

Suprafine® Suprafine XL Fire Guard

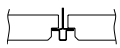

Interlude®

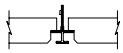

Sonata®

## PHYSICAL DATA

**Material**
Wet-formed mineral fiber

**Surface Finish**
Factory-applied latex paint

**Fire Performance**
ASTM E84 and CAN/ULC S102 surface burning characteristics. Flame Spread Index 25 or less. Smoke Developed Index 50 or less (UL labeled.)

**ASTM E1264 Classification**
Type III, Form 1, Pattern E I
Fire Class A

**Humidity/Sag Resistance**
HumiGuard® Plus ceiling panels maintain superior sag resistance. Recommended for areas subject to high humidity, up to, but not including, standing water and outdoor applications.

**Anti-Mold/Mildew**
Ceiling panels with BioBlock® coating contain a mold-inhibiting agent that resists the growth of mold and mildew.

**VOC Emissions**
Third-party certified compliant with California Department of Public Health CDPH/EHLB/Standard Method Version 1.1, 2010. This standard is the guideline for low emissions in LEED, CalGreen Title 24, ANSI/ASHRAE/USGBC/IES Standard 189; ANSI/GBI Green Building Assessment Protocol.

**Acoustical Performance**
CAC testing conducted using Silhouette suspension system.

**Primary (Embodied) Energy**
See all LCA information on our EPD's.

**High Recycled Content**
Contains greater than 50% total recycled content. Total recycled content based on product composition of post-consumer and pre-consumer (post-industrial) recycled content per FTC guidelines.

**Insulation Value**
R Factor – 1.9 (BTU units)
R Factor – 0.33 (Watts units)

**30-Year Performance Guarantee & Warranty**
When installed with Armstrong® Suspension System. Details at armstrongceilings.com/warranty

**Weight; Square Feet/Carton**
551 – 1.21 lbs/SF; 48 SF/ctn
556, 558 – 1.50 lbs/SF; 40 SF/ctn
568 – 1.25 lbs/SF; 48 SF/ctn

**Minimum Order Quantity**
1 carton

**Metric Items Available**
551M, 558M, 568M – Metric items are subject to extended lead times and minimum quantities. Contact your representative for more details.



LEED® is a registered trademark of the US Green Building Council

TC-002

Revision Date:

# CIRRUS®
# CIRRUS® High NRC

Tegular
medium texture

USDA CERTIFIED BIOBASED PRODUCT
PRODUCT 94%

CLOSED LOOP RECYCLED CONTENT
CEILING-2-CEILING®
HRC items contain 15% or greater post-consumer recycled ceilings

UP TO 73% RECYCLED CONTENT

Calculate LEED contribution at armstrongceilings.com/greengenie

LEED®

| energy management | construction waste mgmt | regional materials | design for flexibility | EPD | recyclable/ extended producer resp. | biobased materials | recycled content | sourcing of raw materials | material ingredient reporting | low emitting/ materials | lighting quality | acoustics |
|---|---|---|---|---|---|---|---|---|---|---|---|---|
| ✓ | ✓ | ✓ | ✓ | ✓ | ✓ | ✓ | ✓ | ✓ | ✓ | ✓ | ✓ | ✓ |

▲ LOCATION DEPENDENT

## VISUAL SELECTION

## PERFORMANCE SELECTION

Dots represent high level of performance.

| Edge Profile | Susp. Dwg. Pgs. 295-299 armstrongceilings.com/catdwgs | Item No. | Dimensions (Inches) | UL Classified Acoustics NRC | UL Classified Acoustics CAC | Total Acoustics[1] NRC+CAC | Articulation Class AC | Fire Rating | Light Reflect | Anti-Mold & Mildew Bio-Block | Sag Resist Humi-Guard+ | Certified Low VOC Emissions | Durability | Recycled Content | Recycle Program | 30-Yr Warranty |
|---|---|---|---|---|---|---|---|---|---|---|---|---|---|---|---|---|
| **CIRRUS® Tegular** | | | | | | | | | | | | | | | | |
| 9/16" Beveled Tegular | 29, 44, 48, 52, 56, 60 | **589_ _**◆◆ **589HRC** **589M** | 24 x 24 x 3/4" ☐ 24 x 24 x 3/4" 600 x 600 x 19mm | 0.70 • | 35* • | **BETTER** | 170 • | Class A | 0.86†† • | • | • | • | Std | • • • | • | • |
| | 29, 44, 48, 52, 56, 60 | **538** | 24 x 24 x 7/8" ☐ | 0.70 • | 38 • | **BETTER** | 170 • | Class A | 0.86 • | • | • | • | Std | • | • | • |
| | 29, 44, 48, 52, 56, 60 | **577** | 24 x 24 x 3/4" ☐ | 0.35 | 35* • | – | 170 • | Fire Guard | 0.86 • | • | • | • | Std | Std | • | • |
| | 29, 44, 48, 52, 56, 60 | **539** **539HRC** | 24 x 48 x 3/4" ▭ 24 x 48 x 3/4" | 0.70 • | 35 • | **BETTER** | 170 • | Class A | 0.86 • | • | Std | • | Std | • • | • | 10-Yr |
| | 29, 44, 48, 52, 56, 60 | FS **FastSize™ Panels** | W: 4" - 24" / L: 4" - 48" 3/4" thick | N/A | N/A | – | N/A | Class A | 0.86 • | • | Std | • | Std | Std | • | 10-Yr |
| **CIRRUS Tegular** | | | | | | | | | | | | | | | | |
| 15/16" Angled Tegular | 13 | **584_ _**◆◆ **584HRC** **584M** | 24 x 24 x 3/4" ☐ 24 x 24 x 3/4" 600 x 600 x 19mm | 0.70 • | 35 • | **BETTER** | N/A | Class A | 0.86 • | • | • | • | Std | • • • | • | • |
| | 13 | **578** | 24 x 24 x 3/4" ☐ | 0.35 | 35 • | – | N/A | Fire Guard | 0.86 • | • | • | • | Std | Std | • | • |
| | 13 | **534** | 24 x 24 x 7/8" ☐ | 0.70 • | 38 • | **BETTER** | N/A | Class A | 0.86 • | • | • | • | Std | • | • | • |
| | 13 | **535** **535HRC** | 24 x 48 x 3/4" ▭ 24 x 48 x 3/4" | 0.70 • | 35 • | **BETTER** | N/A | Class A | 0.86 • | • | Std | • | Std | • • | • | 10-Yr |
| | 13 | FS **FastSize™ Panels** | W: 4" - 24" / L: 4" - 48" 3/4" thick | N/A | N/A | – | N/A | Class A | 0.86 • | • | Std | • | Std | Std | • | 10-Yr |

[1] Total Acoustics™ ceiling panels have an ideal combination of noise reduction and sound-blocking performance in one product. **GOOD** (NRC 0.60-0.65; CAC 35+) **BETTER** (NRC 0.70-0.75; CAC 35+) **BEST** (NRC 0.80+; CAC 35+)

◆◆ Add 2-letter color suffix to item number when specifying or ordering (e.g., 589 C R).
HRC items not available in FastSize or other sizes.

FS **FastSize**: Factory-finished, made-to-order sizes, shipped fast (1 carton min.)

MINERAL FIBER

TC-002

Revision Date:

# CIRRUS®
# CIRRUS® High NRC

Tegular
medium texture

USDA CERTIFIED BIOBASED PRODUCT
PRODUCT 94%

CLOSED LOOP RECYCLED CONTENT
CEILING-2-CEILING™
HRC items contain 15% or greater post-consumer recycled ceilings

UP TO 73% RECYCLED CONTENT

Calculate LEED contribution at armstrongceilings.com/greengenie

LEED®
energy management ✓
construction waste mgmt ✓
regional materials ✓
design for flexibility ✓
EPD ✓
recyclable/ extended producer resp. ✓
biobased materials ✓
recycled content ✓
sourcing of raw materials ✓
material ingredient reporting ✓
low emitting/ materials ✓
lighting quality ✓
acoustics ✓

▲ LOCATION DEPENDENT

## VISUAL SELECTION

## PERFORMANCE SELECTION

Dots represent high level of performance. $$$$

| Edge Profile | Susp. Dwg. Pgs. 295-299 armstrongceilings.com/catdwgs | Item No. | Dimensions (Inches) | UL Classified Acoustics NRC | UL Classified Acoustics CAC | Total Acoustics[1] NRC+CAC | Articulation Class AC | Fire Rating | Light Reflect | Anti-Mold & Mildew | Sag Resist | Certified Low VOC Emissions | Durability | Recycled Content | Recycle Program | 30-Yr Warranty |
|---|---|---|---|---|---|---|---|---|---|---|---|---|---|---|---|---|
| **CIRRUS® High CAC** | | | | | | | | | | | | | | | | |
| 15/16" Angled Tegular | 13 | **572** | 24 x 24 x 7/8" | 0.70 • | 40 • | BETTER | 170 • | Class A | 0.86 • | • | • | • | Std | • | • | • |
| | 13 | **581** | 24 x 48 x 7/8" | 0.70 • | 40 • | BETTER | 170 • | Class A | 0.86 • | • | Std | • | Std | • | • | 10-Yr |
| 9/16" Beveled Tegular | 29, 44, 48, 52, 56, 60 | **576** | 24 x 24 x 7/8" | 0.70 • | 40* • | BETTER | 170 • | Class A | 0.86 • | • | • | • | Std | • | • | • |
| | 29, 44, 48, 52, 56, 60 | **583** | 24 x 48 x 7/8" | 0.70 • | 40 • | BETTER | 170 • | Class A | 0.86 • | • | Std | • | Std | • | • | 10-Yr |
| | 13 | FS **FastSize™ Panels** | W: 4" - 24" / L: 4" - 48" 3/4" thick | N/A | N/A | – | N/A | Class A | 0.86 • | • | Std | • | Std | Std | • | 10-Yr |

[1] Total Acoustics™ ceiling panels have an ideal combination of noise reduction and sound-blocking performance in one product.
**GOOD** (NRC 0.60-0.65; CAC 35+) **BETTER** (NRC 0.70-0.75; CAC 35+) **BEST** (NRC 0.80+; CAC 35+)
HRC items not available in FastSize or other sizes.

FS **FastSize**: Factory-finished, made-to-order sizes, shipped fast (1 carton min.)

## SUSPENSION SYSTEMS

15/16"

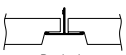

Prelude®
Prelude® XL®
Fire Guard™

9/16"

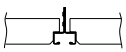

Silhouette®
1/4" Reveal

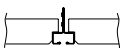

Silhouette
1/8" Reveal

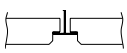

Suprafine®
Suprafine XL
Fire Guard

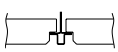

Interlude®

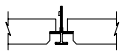

Sonata®

## PHYSICAL DATA

**Material**
Wet-formed mineral fiber

**Surface Finish**
Factory-applied latex paint

**Fire Performance**
ASTM E84 and CAN/ULC S102 surface burning characteristics. Flame Spread Index 25 or less. Smoke Developed Index 50 or less (UL labeled.) Fire Guard™: A fire-resistive ceiling when used in applicable UL assemblies

**ASTM E1264 Classification**
Type III, Form 1, Pattern E I
Fire Class A

**Humidity/Sag Resistance**
HumiGuard® Plus ceiling panels maintain superior sag resistance. Recommended for areas subject to high humidity, up to, but not including, standing water and outdoor applications. Excludes items 535, 539, 581, 583.

**Anti-Mold/Mildew**
Ceiling panels with BioBlock® coating contain a mold-inhibiting agent that resists the growth of mold and mildew.

**VOC Emissions**
Third-party certified compliant with California Department of Public Health CDPH/EHLB/Standard Method Version 1.1, 2010. This standard is the guideline for low emissions in LEED, CalGreen Title 24, ANSI/ASHRAE/USGBC/IES Standard 189; ANSI/GBI Green Building Assessment Protocol.

**Acoustical Performance**
CAC testing conducted using Silhouette suspension system.

**Primary (Embodied) Energy**
See all LCA information on our EPD's.

**High Recycled Content**
Contains greater than 50% total recycled content. Total recycled content based on product composition of post-consumer and pre-consumer (post-industrial) recycled content per FTC guidelines.

**Insulation Value**
R Factor – 1.9 (BTU units)
R Factor – 0.33 (Watts units)

**30-Year Performance Guarantee & Warranty**
When installed with Armstrong® Suspension System. Details at armstrongceilings.com/warranty

**Weight; Square Feet/Carton**
534, 538, 572, 576 – 1.38 lbs/SF; 40 SF/ctn
535, 539, 581, 583 – 1.21 lbs/SF; 48 SF/ctn
577, 578 – 1.25 lbs/SF; 48 SF/ctn
584, 589 – 1.06 lbs/SF; 48 SF/ctn

**Minimum Order Quantity**
1 carton

**Metric Items Available**
584M, 578M, 534M, 572M, 581M, 535M, 589M, 538M, 577M, 583M, 539M – Metric items are subject to extended lead times and minimum quantities. Contact your representative for more details.




LEED® is a registered trademark of the U.S. Green Building Council
All other trademarks used herein are the property of AWI Licensing Company and/or its affiliates © 2016 AWI Licensing Company
Printed in the United States of America

TC-003

Revision Date:

UP TO 40% RECYCLED CONTENT

Calculate LEED contribution at armstrongceilings.com/greengenie

LEED®: energy management ✓ | construction waste mgmt ✓ | regional materials ✓ | design for flexibility ✓ | EPD | recyclable/ extended producer resp. ✓ | biobased materials ✓ | recycled content ✓ | sourcing of raw materials ✓ | material ingredient reporting | low emitting/ materials ✓ | lighting quality ✓ | acoustics ✓

▲ LOCATION DEPENDENT

$$$$

# ARMATUFF®

## Square Lay-in coarse texture

Armatuff® panels with Prelude® 15/16" suspension system (Pgs. 279-280)

A coarse-textured visual strong enough to withstand impact from non-deliberate contact

### KEY SELECTION ATTRIBUTES

- Durable
  Impact-resistant
  Scratch-resistant
- Can be installed before building is enclosed
- 30-Year Limited System Warranty against visible sag, mold, and mildew

### TYPICAL APPLICATIONS

- Corridors
- Locker rooms
- Auditoriums
- Gymnasiums
- Cafetoriums/multipurpose rooms

Armatuff damage-resistant panels will withstand impact from non-deliberate contact with volleyballs and basketballs normally found in gymnasium activities. The Retention Clips allow the panels to deflect slightly, absorbing the force of the impact, while still providing a mechanism to prevent the panels from being dislodged from the suspension system.

### COLOR

White

## VISUAL SELECTION

## PERFORMANCE SELECTION

Dots represent high level of performance.

| Edge Profile | Susp. Dwg. Pgs. 295-299 armstrongceilings.com/catdwgs | Item No. | Dimensions (Inches) | UL Classified Acoustics NRC | UL Classified Acoustics CAC | Total Acoustics[1] | Fire Rating | Light Reflect | Anti-Mold & Mildew | Sag Resist | Certified Low VOC Emissions | Impact (Durability) | Scratch (Durability) | Recycled Content | Recycle Program | 30-Yr Warranty |
|---|---|---|---|---|---|---|---|---|---|---|---|---|---|---|---|---|
| **ARMATUFF** | | | | | | | | | Bio-Block | Humi-Guard+ | | | | | | |
| 15/16" Square Lay-in | 1 | **861** | 24 x 24 x 3/4" □ | 0.50 | 33 | – | Class A | 0.87 • | • | • | – | • | • | Std | • | • |
| | 1 | **860** | 24 x 48 x 3/4" ▭ | 0.50 | 35 • | – | Class A | 0.87 • | • | • | – | • | • | Std | • | • |
| | 1 | **Other Size Panels** | W: 6" – 30" / L: 12" – 50" 3/4" Thick | N/A | N/A | – | Class A | 0.87 • | • | • | – | • | • | Std | • | • |

[1] Total Acoustics™ ceiling panels have an ideal combination of noise reduction and sound-blocking performance in one product.

## SUSPENSION SYSTEMS

15/16"

Prelude

## ACCESSORIES

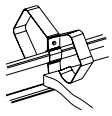

**414 - Retention Clip (ordered separately)**
Attaches to main beams and cross tees behind lay-in ceilings; helps prevent panel displacement from non-deliberate contact by basketballs and other forces from below the ceiling.

## PHYSICAL DATA

**Material**
Wet-formed high-density mineral fiber

**Surface Finish**
Factory-applied latex paint

**Fire Performance**
ASTM E84 and CAN/ULC S102 surface burning characteristics. Flame Spread Index 25 or less. Smoke Developed Index 50 or less. (UL labeled)

**ASTM E1264 Classification**
Type III, Form 2, Pattern C E
Fire Class A

**Humidity/Sag Resistance**
HumiGuard® Plus ceiling panels maintain superior sag resistance. Recommended for areas subject to high humidity, up to, but not including, standing water and outdoor applications.

**Anti-Mold/Mildew**
Ceiling panels with BioBlock® coating contain a mold-inhibiting agent that resists the growth of mold and mildew.

**Insulation Value**
R Factor – 1.7 (BTU units)
R Factor – 0.30 (Watts units)

**30-Year Performance Guarantee & Warranty**
When installed with Armstrong® Suspension System. Details at armstrongceilings.com/warranty

**Weight; Square Feet/Carton**
860 – 1.13 lbs/SF; 64 SF/ctn
861 – 1.23 lbs/SF; 64 SF/ctn

**Minimum Order Quantity**
1 carton, excludes other size panels

**Metric Items Available**
861M, 860M – Metric items are subject to extended lead times and minimum quantities. Contact your representative for more details.




LEED® is a registered trademark of the U.S. Green Building Council
All other trademarks used herein are the property of AWI Licensing Company and/or its affiliates © 2015 AWI Licensing Company
Printed in the United States of America


Armstrong® CEILING SOLUTIONS

Tile Floor

Issue Date: 28 JUL 2017

Revision Date: 25 MAY 2018

| | |
|---|---|
| Item Name | Floor Tile |
| Description: | Floor tile at Women's and Men's public restrooms, pool water closet, pool shower, guest laundry room, and employee bathroom |
| Manufacturer: | Iris Ceramics (Division of GranitiFiandre) |
| Product/Color: | Product: Urban Style<br>Color: Cenere |
| Dimensions: | 24" x 24" |
| Material: | Porcelain (through body) |
| Finish: | Honed |
| Recommended Grout: | Refer to Specification GR-003 |
| Coefficient of Friction: | Dry 0.76 / Wet 0.61 |
| Lead Time: | 8 weeks |
| Warranty: | Warranty to cover products purchased for up to 12 months from the date of shipment. |
| Eco-Feature(s) *as per manufacturer: | Recycled Content = 40% |

## SPECIAL INSTRUCTIONS

MANUFACTURER

Iris Ceramics, Division of GranitiFiandre USA 727-522-6655

Maria Lucia Lavista mlavista@granitifiandre.it

ALTERNATE MANUFACTURER 1

ALTERNATE MANUFACTURER 2

ALTERNATE MANUFACTURER 3

AREAS

Public Space

- Pool (Splash) Restroom (w/c)
- Clean
- Employee Toilet (w/c)
- Pool Shower
- Public Restroom - Men's (w/c)
- Public Restroom - Women's (w/c)

# TF-003

Revision 4

Tile Floor

Issue Date: 28 JUL 2017

Revision Date: 14 FEB 2019

| | |
|---|---|
| Item Name | Floor Tile (Swimming Pool Accent) |
| Manufacturer: | Design and Direct Source |
| Product/Color: | Product: Enamel Glass Mosaic Sync Series<br>Color: 73 |
| Dimensions: | .5"W x .5"W x .25" thick<br>1'x1' Sheet |
| Material: | Glass Mosaic |
| Finish: | Matte |
| Recommended Grout: | Refer to Specification GR-007 |
| Grout Joint Width: | Joints between sheets to match joints between individual tiles |
| Coefficient of Friction: | |
| Lead Time: | Standard lead times are 3-4 weeks from receipt of Purchase Order and Deposit. Lead time is typical and should be verified by the manufacturer. |
| Warranty: | |
| Note: | |
| Eco-Feature(s) *as per manufacturer: | Not Applicable |

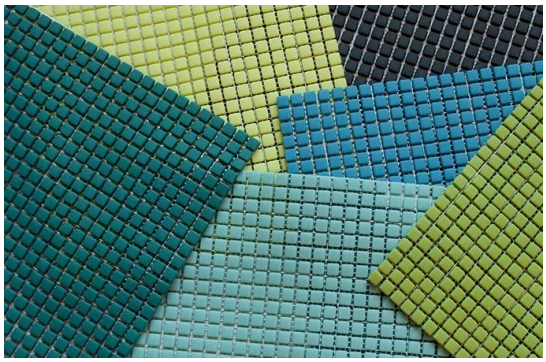

## SPECIAL INSTRUCTIONS

MANUFACTURER

| | |
|---|---|
| Design and Direct Source | 503-525-0600 |
| Suzanne Sanning | 503-388-2044 |

ALTERNATE MANUFACTURER 1

ALTERNATE MANUFACTURER 2

ALTERNATE MANUFACTURER 3

AREAS

Public Space

Indoor Pool (Splash)

Pool (Splash)

Issue Date: 28 JUL 2017

Revision Date: 25 MAY 2018

| | |
|---|---|
| Item Name | Floor Tile |
| Description: | Quarry tile at prep kitchen floor |
| Manufacturer: | Dal Tile |
| Product/Color: | Product: Quarry Textures<br>Color: Ashen Grey (0T03) |
| Dimensions: | 4" x 8" (1/2" thick) |
| Material: | Quarry Tile |
| Finish: | Unpolished |
| Recommended Grout: | Refer to specification GR-005 |
| Coefficient of Friction: | Wet: >0.70<br>Dry: >0.70 |
| Lead Time: | Standard lead times are 2-3 weeks from receipt of Purchase Order and Deposit. Lead time is typical and should be verified by the manufacturer. |
| Warranty: | Daltile warrants that manufactured products will be free from defect for a period of one year from date of purchase. |
| Eco-Feature(s) *as per manufacturer: | Pre-consumer recycled materials |

## SPECIAL INSTRUCTIONS

MANUFACTURER

Daltile

Lucia Franco 203-230-8315 lucia.franco@daltile.com

ALTERNATE MANUFACTURER 1

ALTERNATE MANUFACTURER 2

ALTERNATE MANUFACTURER 3

AREAS

Public Space

Food Prep

Food Prep Storage

**ALOFT Hotels G4.0-Public Spaces**

**G4.0**

**BUILDING PRODUCT MANUAL**

# TF-006

Tile Floor

Issue Date: 14 FEB 2019

Revision Date:

| | |
|---|---|
| Item Name | Floor Tile |
| Description: | Porcelain tile at public restrooms |
| Manufacturer: | Creative Materials Corporation |
| Product/Color: | Vision/Dove |
| Dimensions: | 24"x24" |
| Material: | Colorbody Porcelain |
| Finish: | Natural |
| Recommended Grout: | Refer to specification GR-011 |
| Coefficient of Friction: | DCOF: >0.42 |
| Lead Time: | 1-2 Weeks |
| Warranty: | Warranty to cover products purchased for up to 12 months from the date of shipment |
| Eco-Feature(s) *as per manufacturer: | Pre-consumer recycled materials |

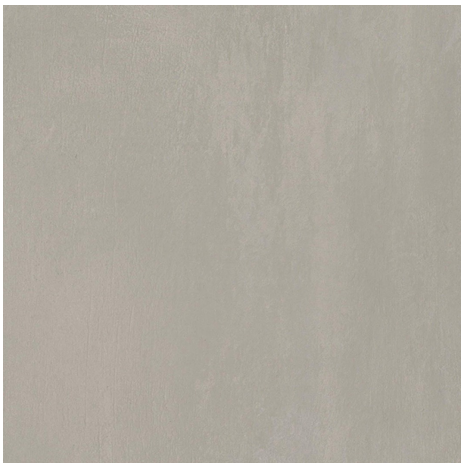

## SPECIAL INSTRUCTIONS

MANUFACTURER

Creative Materials Corporation

Jessica Sheldon (518)713-5368 JSheldon@creativematerialscorp.com

ALTERNATE MANUFACTURER 1

ALTERNATE MANUFACTURER 2

ALTERNATE MANUFACTURER 3

AREAS

Public Space

Public Restroom - Men's (w/c)

Public Restroom - Women's (w/c)

Tile Wall

Issue Date: 28 JUL 2017

Revision Date: 25 MAY 2018

| | |
|---|---|
| Item Name | Wall Tile |
| Description: | Wall tile at Women's Public Restroom and Employee Bathroom water closet |
| Manufacturer: | Iris Ceramics (Division of GranitiFiandre) |
| Product: | Kreo |
| Color: | White |
| Dimensions: | 24" x 8" |
| Material: | Porcelain (through body) |
| Finish: | Natural |
| Recommended Grout: | Refer to Specification GR-006. |
| Lead Time: | 8 weeks |
| Warranty: | Warranty to cover products purchased for up to 12 months from the date of shipment. |
| Eco-Feature(s) *as per manufacturer: | Not Applicable |



## SPECIAL INSTRUCTIONS

MANUFACTURER

Iris Ceramics, Division of GranitiFiandre USA 727-522-6655

Maria Lucia Lavista mlavista@granitifiandre.it

ALTERNATE MANUFACTURER 1

ALTERNATE MANUFACTURER 2

ALTERNATE MANUFACTURER 3

AREAS

Public Space

- Public Restroom - Men's (w/c)
- Public Restroom - Women's (w/c)

Issue Date: 28 JUL 2017

Revision Date: 14 FEB 2019

| | |
|---|---|
| Item Name | Wall Tile |
| Manufacturer: | Creative Materials Corporation |
| Product: | Gradient |
| Color: | Pink |
| Dimensions: | 4"x12" |
| Material: | Ceramic |
| Finish: | Glossy |
| Recommended Grout: | Refer to Specification GR-009 |
| Lead Time: | 6-8 weeks |
| Warranty: | To be Verified |
| Eco-Feature(s) *as per manufacturer: | Not Applicable |

## SPECIAL INSTRUCTIONS

MANUFACTURER

Creative Materials Corporation

Jessica Sheldon (518)713-5368 JSheldon@creativematerialscorp.com

ALTERNATE MANUFACTURER 1

ALTERNATE MANUFACTURER 2

ALTERNATE MANUFACTURER 3

AREAS

Public Space

Public Restroom - Women's (w/c)

# TW-007

Revision 4

Tile Wall

Issue Date: 28 JUL 2017

Revision Date: 14 FEB 2019

| | |
|---|---|
| Item Name | Wall Tile |
| Manufacturer: | Creative Materials Corporation |
| Product: | Gradient |
| Color: | Blue |
| Dimensions: | 4"x12" |
| Material: | Ceramic |
| Finish: | Glossy |
| Recommended Grout: | Refer to Specification GR-010 |
| Lead Time: | 6-8 weeks |
| Warranty: | To be Verified |
| Eco-Feature(s) *as per manufacturer: | Not Applicable |

## SPECIAL INSTRUCTIONS

MANUFACTURER

Creative Materials Corporation

Jessica Sheldon (518)713-5368 JSheldon@creativematerialscorp.com

ALTERNATE MANUFACTURER 1

ALTERNATE MANUFACTURER 2

ALTERNATE MANUFACTURER 3

AREAS

Public Space

Public Restroom - Men's (w/c)

# TW-008

Revision 4

Tile Wall

Issue Date: 28 JUL 2017

Revision Date: 14 FEB 2019

| | |
|---|---|
| Item Name | Wall Tile |
| Description: | Wall tile at Pool Interior and Back Wall |
| Manufacturer: | Design and Direct Source |
| Product: | Enamel Glass Mosaic Sync Series |
| Color: | 53 |
| Dimensions: | .5"W x .5"w x .25" thick<br>1' x 1' Sheet |
| Material: | Glass Mosaic |
| Finish: | Matte |
| Recommended Grout: | Refer to Specification GR-007 |
| Lead Time: | 3-4 weeks |
| Warranty: | |
| Eco-Feature(s) *as per manufacturer: | Not Applicable |

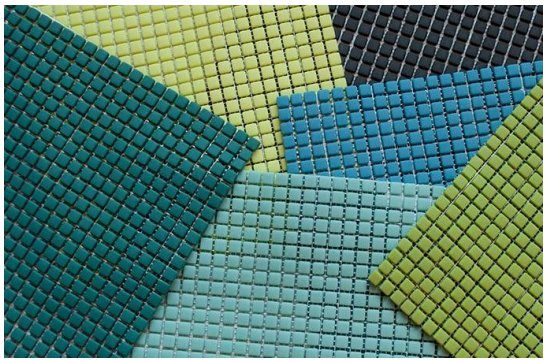

## SPECIAL INSTRUCTIONS

MANUFACTURER

| | |
|---|---|
| Design and Direct Source | 503-525-0600 |
| Suzanne Sanning | 503-388-2044 |

ALTERNATE MANUFACTURER 1

ALTERNATE MANUFACTURER 2

ALTERNATE MANUFACTURER 3

AREAS

Public Space

Indoor Pool (Splash)

Pool (Splash)

Issue Date: 28 JUL 2017

Revision Date: 14 FEB 2019

| | |
|---|---|
| Item Name | Wall Tile |
| Description: | Rectangular-shaped wall tile |
| Manufacturer: | Porcelanosa |
| Product: | OXO Line XL 45X120(A) |
| Color: | White |
| Dimensions: | 47" x 18" x 3/8" Thick |
| Material: | Porcelain |
| Finish: | Matt |
| Recommended Grout: | Refer to Specification GR-012 |
| Lead Time: | 6 to 8 weeks |
| Warranty: | Company will replace any uninstalled Products found to be defective, provided that the Buyer has given written notice of defect to the company within 12 months of the original purchase date. |
| Eco-Feature(s) *as per manufacturer: | Certified manufacturer with ISO 14021, ISO 500001, ISO 9001, and ISO 14001.<br>Production uses plentiful raw materials, recycles energy and does not create industrial refuse that burdens landfills.<br>Antimicrobial properties for germs, bacteria and allergens.<br>Faces of glazed ceramic tiles will not retain liquids or absorb fumes, odors or smoke.<br>Does not emit VOC's for good air quality. |

## SPECIAL INSTRUCTIONS

MANUFACTURER

Porcelanosa

Debra F. Avison 301-412-2340 davison@porcelanosa-usa.com

ALTERNATE MANUFACTURER 1

ALTERNATE MANUFACTURER 2

ALTERNATE MANUFACTURER 3

AREAS

Public Space

Bar (W XYZ)

# TW-011

Tile Wall

Issue Date: 14 FEB 2019

Revision Date:

| | |
|---|---|
| Item Name | Wall Tile |
| Description: | Subway Tile at Wall |
| Manufacturer: | Ceramic Technics |
| Product: | Vogue |
| Color: | Corallo |
| Dimensions: | 4"x8" |
| Material: | Field Tile |
| Finish: | Matte |
| Recommended Grout: | Refer to Grout Specification: GR-009 |
| Lead Time: | To be Verified |
| Warranty: | |
| Eco-Feature(s) *as per manufacturer: | N/A |

## SPECIAL INSTRUCTIONS

MANUFACTURER

Ceramic Technics 770-740-0050

Corey Turnage (804) 658.9955

ALTERNATE MANUFACTURER 1

ALTERNATE MANUFACTURER 2

ALTERNATE MANUFACTURER 3

AREAS

Public Space

Pool (Splash) Restroom (w/c)

Issue Date: 14 FEB 2019

Revision Date:

| | |
|---|---|
| Item Name | Wall Tile |
| Description: | Tile Trim at Wall |
| Manufacturer: | Design and Direct Source |
| Product: | Santos Heritage Field Long Side Bullnose Glazed Edge 3"x6" |
| Color: | Coral |
| Dimensions: | 3"x6"<br>.25" Thickness |
| Material: | Bullnose Glazed Tile |
| Finish: | Glossy |
| Recommended Grout: | Refer to Grout GR-009 for specification details. |
| Lead Time: | 3-4 Weeks |
| Warranty: | TBD |
| Eco-Feature(s) *as per manufacturer: | TBD |

## SPECIAL INSTRUCTIONS

MANUFACTURER

| | |
|---|---|
| Design and Direct Source | 503-525-0600 |
| Suzanne Sanning | 503-388-2044 |

ALTERNATE MANUFACTURER 1

ALTERNATE MANUFACTURER 2

ALTERNATE MANUFACTURER 3

AREAS

Public Space

Pool (Splash) Restroom (w/c)

Transition Strips

Issue Date: 28 JUL 2017

Revision Date: 29 JAN 2018

| | |
|---|---|
| Item Name | Resilient Transition Strip |
| Description: | Narrow "T" mold transition strip |
| Manufacturer: | Johsonite |
| Product #: | CE-XX-A (confirm flooring thicknesses prior to ordering product) |
| Color: | TBD |
| Dimensions: | Transition between 1/4" & 5/16" material to 1/8" material |
| Lead Time: | TBD |
| Warranty: | Limited 2 year warranty |

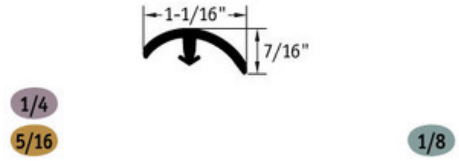


## SPECIAL INSTRUCTIONS

MANUFACTURER

JOHNSONITE 800-899-8916

Roxane Spears 781-258-2837 roxane.spears@tarkett.com

ALTERNATE MANUFACTURER 1

ALTERNATE MANUFACTURER 2

ALTERNATE MANUFACTURER 3

AREAS

Issue Date: 21 SEP 2018

Revision Date:

| | |
|---|---|
| Item Name | ReFuel Wall Finish Transition |
| Description: | Jolly Profile Trim |
| Manufacturer: | Schulter Systems |
| Product #: | A60BW |
| Finish: | Color-coated Aluminum, Bright White |
| Details: | L Shaped Profile with 1/8" Wide Top Section Vertical Wall Section that Together Form the Visible Surface; Integrated Trapezoid Perforated Anchoring Leg and Integrate Grout Joint Spaces. Height as Required to Coordinate with Tile Selection and Setting System. |
| Lead Time: | 2 Days |
| Warranty: | 5 Year Limited Warranty from the Date of Purchase |

## SPECIAL INSTRUCTIONS

1. VERIFY IF TRIM IS PROVIDED BY SHEET METAL OR WALL COVERING MANUFACTURER PRIOR TO PURCHASING.

MANUFACTURER

Schluter Systems 1.800.472.4588

Earl Maicus 800-472-4588 emaicus@schluter.com

ALTERNATE MANUFACTURER 1

ALTERNATE MANUFACTURER 2

ALTERNATE MANUFACTURER 3

AREAS

Public Space

Snack Bar (Re:Fuel)

Issue Date: 14 FEB 2019

Revision Date:

| | |
|---|---|
| Item Name | Corner Trim |
| Description: | Outside Corner Metal Trim for wallcovering @ large booth |
| Manufacturer: | Fry Reglet |
| Model Number: | WCTOSC (outside corner) |
| Dimensions: | 7/32" x 7/32"x 11'-0" H |
| Finish: | Black |
| Lead Time: | Verify current lead times with manufacturer |
| Warranty: | 1 year warranty |

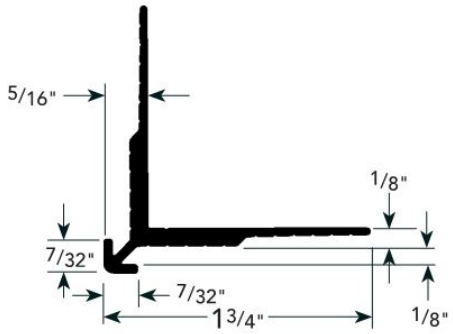


## SPECIAL INSTRUCTIONS

MANUFACTURER

Fry Reglet Corp (800) 237-9773

Nick Green (770) 468-2599 nickgreen@fryreglet.com

ALTERNATE MANUFACTURER 1

ALTERNATE MANUFACTURER 2

ALTERNATE MANUFACTURER 3

AREAS

Public Space

Lobby (Re:Mix)

Wood

Issue Date: 28 JUL 2017

Revision Date: 25 MAY 2018

| | |
|---|---|
| Item Name | Wood Planks |
| Manufacturer: | GC to Source/Install |
| Material: | Tongue and Groove Cedar Plank Roof Decking |
| Color: | Varies |
| Size: | 6"-10" Wide with Wood Cross Beams |
| Finish: | Graded Smooth Face; 2-3 Coats of Stain and Polyurethane or Similar Finish. Sealer Suitable for High Humidity, Chlorinated and Salt Water/Pool Environments. |
| Note: | Wood Species Sample with Finish and Stain to be Submitted for Approval Prior to Construction. |
| Lead Time: | TBD |
| Warranty: | TBD |
| Eco-Features* - as per manufacturer: | TBD |

## SPECIAL INSTRUCTIONS

MANUFACTURER

GC to Source / Install

General Contractor

ALTERNATE MANUFACTURER 1

ALTERNATE MANUFACTURER 2

ALTERNATE MANUFACTURER 3

AREAS

Public Space

Indoor Pool (Splash)

Issue Date: 28 JUL 2017

Revision Date: 29 JAN 2018

| | |
|---|---|
| Item Name | Wood Veneer Panels |
| Manufacturer: | BUR+MAH LLC |
| Product: | Wood veneer affixed to rigid substrate 24" wide rigid plank assembly |
| Material: | Wood veneer |
| Color: | Ash |
| Finish: | Use clear finish when WF-001 & WF-002 wood stains are not called out on the drawings |
| Lead Time: | 3-4 weeks |
| Warranty: | 1 year warranty |

## SPECIAL INSTRUCTIONS

MANUFACTURER

BUR+MAH LLC (646) 393-4367

ALTERNATE MANUFACTURER 1

ALTERNATE MANUFACTURER 2

ALTERNATE MANUFACTURER 3

AREAS

Public Space

Snack Bar (Re:Fuel)

Wood Base

# WB-001

Revision 2

Wood Base

Issue Date: 28 JUL 2017

Revision Date: 25 MAY 2018

| | |
|---|---|
| Item Name | Wood Base @ Wood Veneer Panels |
| Manufacturer: | BUR+MAH LLC |
| Product: | Wood veneer affixed to rigid substrate 24" wide rigid plank assembly |
| Material: | Wood veneer |
| Color: | Ash |
| Finish: | Clear Finish |
| Lead Time: | 3-4 Weeks |
| Warranty: | 1 Year Warranty |
| Eco-Features* - as per manufacturer: | To be verified |

## SPECIAL INSTRUCTIONS

MANUFACTURER

BUR+MAH LLC (646) 393-4367

ALTERNATE MANUFACTURER 1

ALTERNATE MANUFACTURER 2

ALTERNATE MANUFACTURER 3

AREAS

Public Space

Snack Bar (Re:Fuel)

Wood Finish

# WF-001

Revision 1

Wood Finish

Issue Date: 28 JUL 2017

Revision Date: 29 JAN 2018

| | |
|---|---|
| Item Name | Wood Stain (Pink) |
| Description: | Oil base wood stain |
| Manufacturer: | BUR+MAH LLC |
| Product/Color: | Pink |
| Urethane Type: | Catalyzed Conversion Varnish |
| Sheen: | 10/ Matte |
| Lead Time: | 3-4 weeks |
| Warranty: | 1 year |

## SPECIAL INSTRUCTIONS

MANUFACTURER

BUR+MAH LLC (646) 393-4367

ALTERNATE MANUFACTURER 1

ALTERNATE MANUFACTURER 2

ALTERNATE MANUFACTURER 3

AREAS

Public Space

Snack Bar (Re:Fuel)

# WF-002

Revision 1

Wood Finish

Issue Date: 28 JUL 2017

Revision Date: 29 JAN 2018

| | |
|---|---|
| Item Name | Wood Stain (Aqua Blue) |
| Description: | Oil base wood stain |
| Manufacturer: | BUR+MAH LLC |
| Product/Color: | Aqua Blue |
| Urenthane Type: | Catalyzed Conversion Varnish |
| Sheen: | 10/Matte |
| Lead Time: | 3-4 weeks |
| Warranty: | 1 year |

## SPECIAL INSTRUCTIONS

MANUFACTURER

BUR+MAH LLC (646) 393-4367

ALTERNATE MANUFACTURER 1

ALTERNATE MANUFACTURER 2

ALTERNATE MANUFACTURER 3

AREAS

Public Space

Snack Bar (Re:Fuel)

# WF-003

Wood Finish

Issue Date: 28 JUL 2017
Revision Date:

| | |
|---|---|
| Item Name | Wood Stain |
| Description: | Wood Veneer |
| Manufacturer: | BUR+MAH LLC |
| Product/Color: | Ash |
| Urethane Type: | Clear Finish |
| Sheen: | 10/Matte |
| Lead Time: | 3-4 weeks |
| Warranty: | 1 year |

## SPECIAL INSTRUCTIONS

MANUFACTURER

BUR+MAH LLC (646) 393-4367

ALTERNATE MANUFACTURER 1

ALTERNATE MANUFACTURER 2

ALTERNATE MANUFACTURER 3

AREAS

Public Space

Lobby (Re:Mix)

Issue Date: 14 FEB 2019

Revision Date:

| | |
|---|---|
| Item Name | Wood Stain |
| Description: | Ash Stained Wood |
| Manufacturer: | Veneer Specialists |
| Product/Color: | SAS-0677/Flat Cut, Ash |
| Finish: | Matte |
| Repeat: | N/A |
| Lead Time: | 4-5 Weeks |
| Warranty: | TBD |
| Eco-Feature(s) *as per manufacturer: | N/A |

## SPECIAL INSTRUCTIONS

MANUFACTURER

| | |
|---|---|
| Veneer Specialists | 630-754-8550 |
| Dina Thomas | 630-754-8550 Ext. 110 |

ALTERNATE MANUFACTURER 1

ALTERNATE MANUFACTURER 2

ALTERNATE MANUFACTURER 3

AREAS

Public Space

Meeting (Tactic)

Wall Graphic

Issue Date: 28 JUL 2017

Revision Date: 14 FEB 2019

| | |
|---|---|
| Item Name | Graphic Panel (Stationary) |
| Description: | Acrylic backlit graphic panel L(stationary) at W XYZ Bar |
| Manufacturer: | MDC |
| Model #: | MAR 705 |
| Dimensions: | 235.5" W x 65.25" H (VIF) |
| Color: | Black on Acrylic |
| Content: | Acrylic 3/8" |
| Lead Time: | 3-4 weeks |
| Warranty: | 5 years |

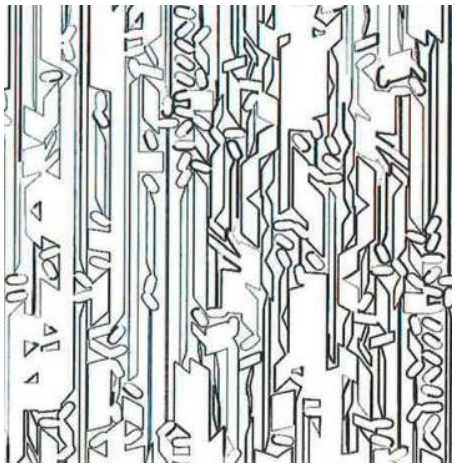

## SPECIAL INSTRUCTIONS

MANUFACTURER

| | | |
|---|---|---|
| MDC | 800-621-4006 | |
| MDC National Accounts | 800-486-9800 | nationalaccounts@mdcwall.com |

ALTERNATE MANUFACTURER 1

ALTERNATE MANUFACTURER 2

ALTERNATE MANUFACTURER 3

AREAS

Public Space

Bar (W XYZ)

Wall Panel

Issue Date: 28 JUL 2017

Revision Date: 29 JAN 2018

| | |
|---|---|
| Item Name | Perforated Panels |
| Manufacturer: | Crane Composites |
| Product: | Sequentia Traditional FRP with accessories (FRFRJ) |
| Thickness: | 0.09" |
| Finish: | Embossed |
| Color: | White |
| Quality Standards | Class A Fire Rating |
| Lead Time: | To be verified |
| Warranty: | Unless otherwise documented in this Purchase Order or otherwise agreed by Buyer and Seller, all warranties and conditions shall run from the date of receipt and acceptance of the Ordered Items by Buyer for a period of three years. |



## SPECIAL INSTRUCTIONS

MANUFACTURER

Crane Composites

Customer Service 800-435-0080 sales@cranecomposites.com

ALTERNATE MANUFACTURER 1

ALTERNATE MANUFACTURER 2

ALTERNATE MANUFACTURER 3

AREAS

Public Space

Pool (Splash)

Issue Date: 28 JUL 2017

Revision Date: 21 SEP 2018

| | |
|---|---|
| Item Name | Metal Wall Panel |
| Description: | Check-In Perforated Aluminum Panels |
| Manufacturer: | Arktura (or approved equal) |
| Product: | Custom Aloft Graphic Perf Standard Panels |
| Dimensions: | 3/16" thick panels |
| Trim Hardware: | 2" deep C-channel |
| Finish: | burnished bronze powder coated finish |
| Lead Time: | 9 Weeks Manufacturing, 1 Week Transit. First article assume 4 weeks for engineering development and design of instructions |
| Warranty: | ARK warrants to the original buyer that its products are free of manufacturing defects in factory materials or workmanship for one year from the date of purchase. |

## SPECIAL INSTRUCTIONS

MANUFACTURER

Arktura

Rob Kilian 310-879-1002 rob@arktura.com

ALTERNATE MANUFACTURER 1

ALTERNATE MANUFACTURER 2

ALTERNATE MANUFACTURER 3

AREAS

Public Space

Front Desk (Check-in)

Issue Date: 28 JUL 2017

Revision Date: 14 FEB 2019

| | |
|---|---|
| Item Name | Metal Wall Panel |
| Description: | Custom Aloft Bar Panel Gradient Design |
| Manufacturer: | Arktura (or approved equal) |
| Product: | Perforated metal bottle cabinet panel fronts |
| Dimensions: | (5) 62.5"H x 38"W |
| Gauge: | 1/4" thick powder coated metal |
| Color: | Arktura burnished bronze powdercoat |
| Lead Time: | 9 weeks for manufacturing and 1 week for transit. First article assume 4 weeks for engineering development and design of instructions |
| Warranty: | ARK warrants to the original buyer that its products are free of manufacturing defects in factory materials or workmanship for one year from the date of purchase. |

## SPECIAL INSTRUCTIONS

MANUFACTURER

Arktura

Rob Kilian 310-879-1002 rob@arktura.com

ALTERNATE MANUFACTURER 1

ALTERNATE MANUFACTURER 2

ALTERNATE MANUFACTURER 3

AREAS

Public Space

Bar (W XYZ)

Issue Date: 28 JUL 2017

Revision Date: 14 FEB 2019

| | |
|---|---|
| Item Name | Wall Panel |
| Description: | Dimensional wall panel |
| Manufacturer: | MDC |
| Product/Color: | MAR 712, Matte finish |
| Lead Time: | 3-4 weeks |
| Warranty: | 5 years |

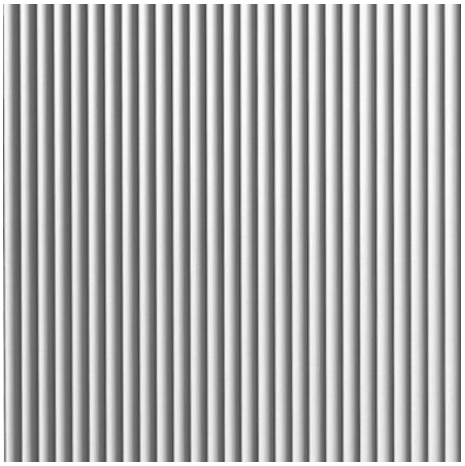

## SPECIAL INSTRUCTIONS

MANUFACTURER

| | | |
|---|---|---|
| MDC | 800-621-4006 | |
| MDC National Accounts | 800-486-9800 | nationalaccounts@mdcwall.com |

ALTERNATE MANUFACTURER 1

ALTERNATE MANUFACTURER 2

ALTERNATE MANUFACTURER 3

AREAS

Public Space

Snack Bar (Re:Fuel)

Issue Date: 28 JUL 2017

Revision Date: 21 SEP 2018

| | |
|---|---|
| Item Name | Metal Wall Panel |
| Description: | Metal Sheeting |
| Manufacturer: | Moz Designs |
| Product/Color: | Solid Aluminum Powder Coat, Bengal White |
| Finish: | Fingerprint resistant coating |
| Gauge: | 1.106mm |
| Width: | 48" |
| Length: | 96" and 120" available<br>GC to verify |
| Lead Time: | To be verified |
| Warranty: | To be verified |

## SPECIAL INSTRUCTIONS

MANUFACTURER

MOZ DESIGNS, INC. 510.632.0853

Jennifer Harrison 510.632.0853 X 16 jen@mozdesigns.com

ALTERNATE MANUFACTURER 1

ALTERNATE MANUFACTURER 2

ALTERNATE MANUFACTURER 3

AREAS

Public Space

Snack Bar (Re:Fuel)

Issue Date: 28 JUL 2017

Revision Date: 21 SEP 2018

| | |
|---|---|
| Item Name | Stainless Steel Panel |
| Description: | Metal Sheeting |
| Manufacturer: | Rimex Metals USA, Inc. |
| Product/Color: | Stainless Steel |
| Gauge: | .8mm min. - 1.5mm max<br>VIF - Verify in Field |
| Width: | 49.2" |
| Length: | 96" and 120" available<br>GC to verify |
| Lead Time: | To be verified |
| Warranty: | Rimex provides written warranties for its products on an individual contract basis. Please contact Rimex for further details. |

## SPECIAL INSTRUCTIONS

MANUFACTURER

Rimex Metals USA Inc. 732-549-3800

Cyndi Zahn czahn@rimexusa.com

ALTERNATE MANUFACTURER 1

ALTERNATE MANUFACTURER 2

ALTERNATE MANUFACTURER 3

AREAS

Public Space

Bar (W XYZ)

Wall Panel

Cutsheets

| WP-001 |
| --- |
| Revision Date: |

CRANE Composites

# frp FIBERGLASS REINFORCED PANELS

SEQUENTIA® WALL PANELS | VARIETEX® | TRANSLUCENT CORRUGATED PANELS

# SEQUENTIA®
Wall Panels

WP-001
Revision Date:

## PEBBLED EMBOSSED TEXTURE

White | 1130

Almond | 1114

Ivory | 0084

Beige | 0070

Stone | 0015

Silver | 0066

Pearl Gray | 0048

Black | 1201

## SMOOTH TEXTURE

White | 1130

# traditional wall panels

Sequentia FRP wall and ceiling panels are durable, cleanable and easy to install. Panels are available in a Class A or Class C fire rating per ASTM E-84. Sequentia Traditional FRP panels are ideal for areas where a cleanable and sanitary finish is essential.

SEQUENTIA EMBOSSED
WHITE (1130)

ORDER SAMPLES AT: 1.800.435.0080

SEQUENTIA EMBOSSED | WHITE (1130)

SEQUENTIA EMBOSSED | SILVER (0066)

SEQUENTIA EMBOSSED | BEIGE (0070)

Add structural strength with SEQUENTIA LAMINATED PANELS featuring an FRP panel laminated to a rigid substrate, which can be installed directly to studs or used as a ceiling panel.

## APPLICATIONS

- Commercial Kitchens
- Restrooms
- Convenience Stores
- Locker Rooms
- Food Processing Plants

## FEATURES

- Mold & Mildew Free
- Meets USDA/FSIS Requirements
- Easy to Install
- Cleanable
- Durable

## ACCESSORIES

- Standard Vinyl/PVC Moldings

## SEQUENTIA FLAT PANEL PRODUCT SPECS

- AVAILABLE SIZES: 4' x 8' | 4' x 10' (other sizes available upon request)
- THICKNESSES: 0.09" (embossed) | 0.075" (smooth)
- FIRE RATINGS: Class A or Class C per ASTM E-84
  * Embossed Stone and Black is available in a Class C fire rating only

## SEQUENTIA LAMINATED PANEL PRODUCT SPECS

- WALL SIZES: 4' x 8' | 4' x 10'
- CEILING SIZES: 23.75" x 23.75" | 23.75" x 47.75"
- AVAILABLE SUBSTRATES:
  Gypsum 1/2" | 5/8"
  Plywood 3/8" | 1/2" | 5/8" | 3/4"
  Oriented Strand Board 3/8" | 1/2" | 5/8"
  Fluted Polypropylene 0.32" | 0.40"
  Double-Sided ACP Core 0.12" | 0.24"

Patterns and colors are a representation and may not accurately reflect the final product. Please obtain a sample of the product before making a final selection at www.frpsamples.com

# VARIETEX®

Innovative Textured and Colored Wall Panels

WP-001

Revision Date:

## SANDSTONE TEXTURE

Cotton White | 1130

Almond Breeze | 866

Fawn Brown | 809

Morning Mist Gray | 636

## LINEN TEXTURE

Cotton White | 1130

Almond Breeze | 866

Fawn Brown | 809

Morning Mist Gray | 636

## TILE-LOOK FINISH

Cotton White | 1130

Almond Breeze | 866

## BEADED TEXTURE

Cotton White 1130

# warm designs

Add depth and dimension to walls, with our unique textures including sandstone, linen, tile and beaded finishes. Beyond the beauty, Varietex offers all the same benefits of traditional FRP wall coverings

VARIETEX TILE-LOOK
COTTON WHITE (1130)

VARIETEX LINEN | MORNING MIST GRAY (636)

VARIETEX SANDSTONE | ALMOND BREEZE (866)

VARIETEX BEADED | COTTON WHITE (1130)

Take your surfaces beyond traditional frp with a tile look, linen or sandstone textures. The grout lines are sealed for easy maintenance, avoiding the grimy build up encountered with regular tile.

## APPLICATIONS

- School Hallways
- Cafeterias
- Dining Rooms
- Reception Areas
- Health Clubs
- Hospitals
- Assisted Living Centers

## FEATURES

- Mold & Mildew Free
- Easy to Install
- Cleanable
- Durable

## ACCESSORIES

- Silhouette Trims® Moldings
- Beaded Panel Moldings

## PRODUCT SPECS

- AVAILABLE SIZES: 4' x 8' | 4' x 10'
- THICKNESSES: 0.09" (Sandstone and Linen) | 0.075" (Beaded)
- FIRE RATINGS: Class A per ASTM-E84 (Sandstone and Linen only) | Class C per ASTM-E84

* Custom colors available upon request

Patterns and colors are a representation and may not accurately reflect the final product. Please obtain a sample of the product before making a final selection at www.frpsamples.com

| WP-001 |
| --- |
| Revision Date: |

# SEQUENTIA®

Translucent Corrugated Panels

## SUPER 600®

Clear | 700

White | 920

Green | 1307

## WEATHERGLAZE®

Clear | 711

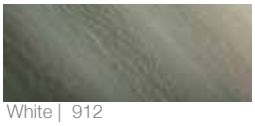

White | 912

Green | 933

## APPLICATIONS

Patios
Pool Enclosures
Privacy Fences
Carports
Deck Lovers

## PRODUCT INFO

SUPER 600:
Enhanced Weathering FRP Panel
UV Resistant Properties
Smooth Finish
Twenty Year Limited Warranty

WEATHERGLAZE:
Standard FRP Panel
Textured Look
Ten Year Limited Warranty

# add coverage

Sequentia Translucent Corrugated Panels are ideal for patios, pool enclosures, privacy fences, carports, greenhouses, decks and more. We offer a variety of products to meet the needs of residential applications.

SEQUENTIA SUPER 600
WHITE (920)

# ACCESSORIES
## For Panel Installation

### VINYL/PVC MOLDINGS

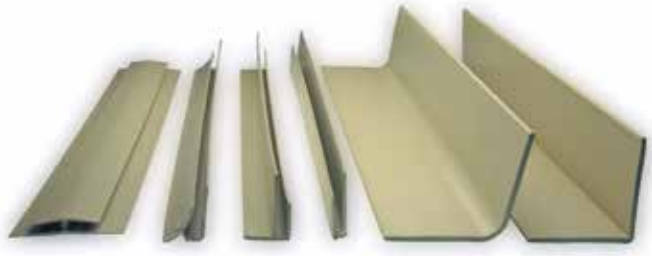

Standard for SEQUENTIA Flat and Wide for SEQUENTIA Laminated

### SILHOUETTE TRIMS®

For VARIETEX Textures

### BEADED PANEL MOLDING

For VARIETEX Beaded Wall Panels

### CORRUGATED MOLDINGS

For SEQUENTIA Corrugated

## INSTALLATION TOOLS

Crane Composites wall panels are easy to install with our stocked accessories and tools.

Installation accessories include our Crane Fast Grab or Crane Advanced Polymer Adhesive, rollers and trowels along with detailed installation guides and videos. Visit cranecomposites.com/resources.html for detailed installation information.

Patterns and colors are a representation and may not accurately reflect the final product. Please obtain a sample of the product before making a final selection at www.frpsamples.com

# ABOUT CRANE COMPOSITES

## Crane Composites Inc., a subsidiary of Crane Co. (NYSE:CR), is the world's leading provider of fiber-reinforced composite materials.

Since 1954, we have continued to pioneer numerous patented technologies for industrial and commercial product applications. We've built a proven reputation for industry leadership by partnering with customers and suppliers to deliver advanced, industry-leading solutions.

Our products and our team reflect our mission statement: We are a performance driven organization committed to global leadership and the production of high quality composite materials. And we are committed to profitable growth that benefits our employees and stakeholders by adhering to our high standards of Operational Excellence and our Crane Values.

Customers benefit not only from the outstanding performance characteristics of our products; they also realize value from our extensive product support program. Our expert product teams are focused on the needs of customers to provide unparalleled service and expertise.

CRANE Composites

USDA

UL GREENGUARD PRODUCT CERTIFIED FOR LOW CHEMICAL EMISSIONS UL.COM/GG UL 2818

MADE IN THE USA

**cranecomposites.com** | 1.800.435.0080 | 1.815.467.8666 [fax] | **salesbp@cranecomposites.com**

The following are trademarks of Crane Composites, Inc. or a related company: Sequentia, Kemlite, Silhouette Trims and Varietex

Form 2507 | Rev. 20 | 10.18 | (8495)

# WP-002

Revision Date:

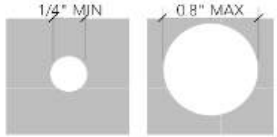


SCALE: 1'-0" = 1'-0"

## PATTERN

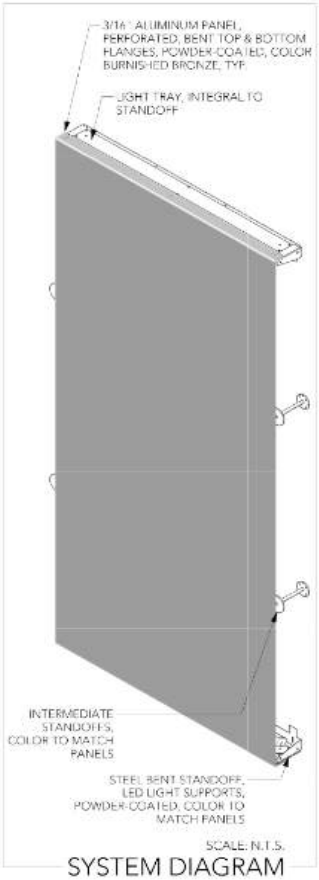


SCALE: N.T.S.

## SYSTEM DIAGRAM

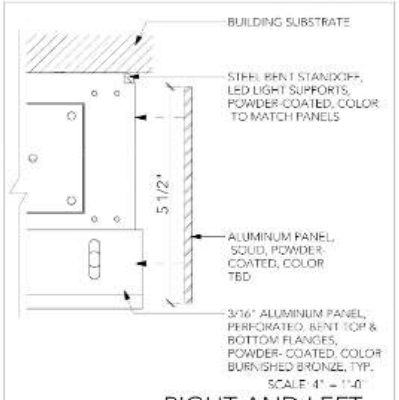


SCALE: 4" = 1'-0"

## RIGHT AND LEFT CLOSURE PANELS

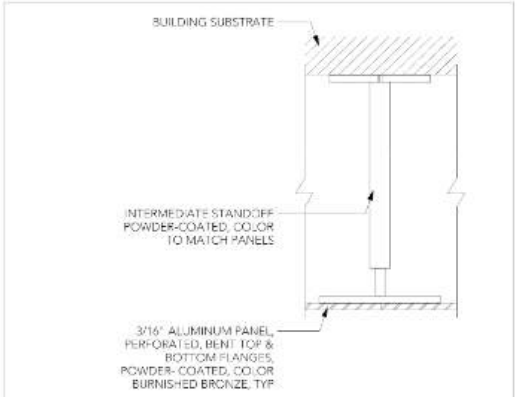


SCALE: 4" = 1'-0"

## STANDOFF TYPE 2

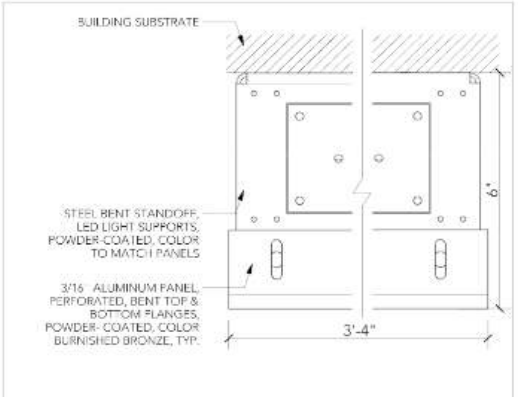


SCALE: 4" = 1'-0"

## STANDOFF TYPE 1

ARKTURA

aloft™

THE INFORMATION CONTAINED IN THIS DRAWING IS THE SOLE PROPERTY OF ARKTURA LLC. ANY REPRODUCTION IN PART OR AS A WHOLE WITHOUT THE WRITTEN PERMISSION OF ARKTURA LLC IS PROHIBITED. ANY USE OF INFORMATION CONTAINED IN THESE DOCUMENTS FOR CONSTRUCTION IS PROHIBITED BY LAW UNLESS CONTRACTED WITH ARKTURA. SOME OF THE DETAILS CONTAINED WITHIN MAY ALSO BE COPYRIGHTED BY ARKTURA LLC.

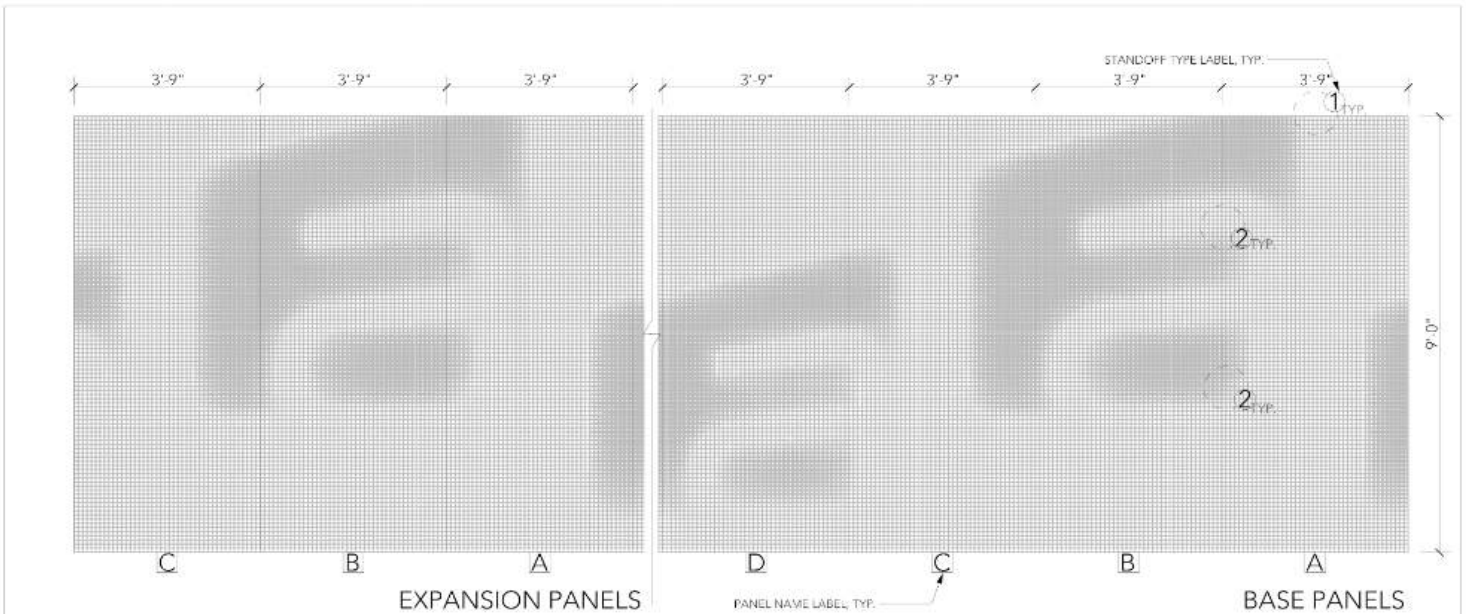


## EXPANSION PANELS

## BASE PANELS

Please note: Since the substrate of each location that these panels may be attached to widely varies; Arktura cannot specify the hardware to be used to attach the standoffs into that substrate. The base building engineer should be contacted to obtain that information.

Note: As this is an expandable system - the closure panel can end at any panel. In other words, an A, B, C, and D set of panels could be ordered and the closure panel would attach to the right side of panel A and the left side of panel D or if it were just an A, B, C set of panels - it could attach to the left side of panel C.

SCALE: N.T.S.

## PANEL ELEVATION

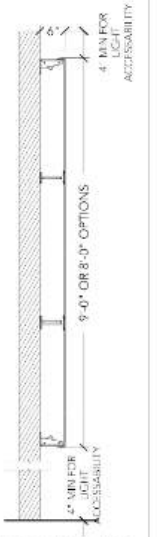


Please note: The distance from the bottom or top substrate should be referenced from the architectural drawings to ensure sufficient clearance.

## SECTION

**WP-003**

Revision Date:

ARKTURA

aloft™

THE INFORMATION CONTAINED IN THIS DRAWING IS THE SOLE PROPERTY OF ARKTURA LLC. ANY REPRODUCTION IN PART OR AS A WHOLE WITHOUT THE WRITTEN PERMISSION OF ARKTURA LLC IS PROHIBITED. ANY USE OF INFORMATION CONTAINED IN THESE DOCUMENTS FOR CONSTRUCTION IS PROHIBITED BY LAW UNLESS CONTRACTED WITH ARKTURA. SOME OF THE DETAILS CONTAINED WITHIN MAY ALSO BE COPYRIGHTED BY ARKTURA LLC.

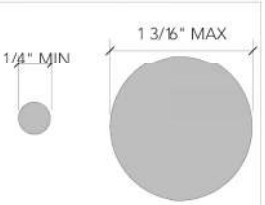


SCALE: '-0" = 1'-0"

PATTERN

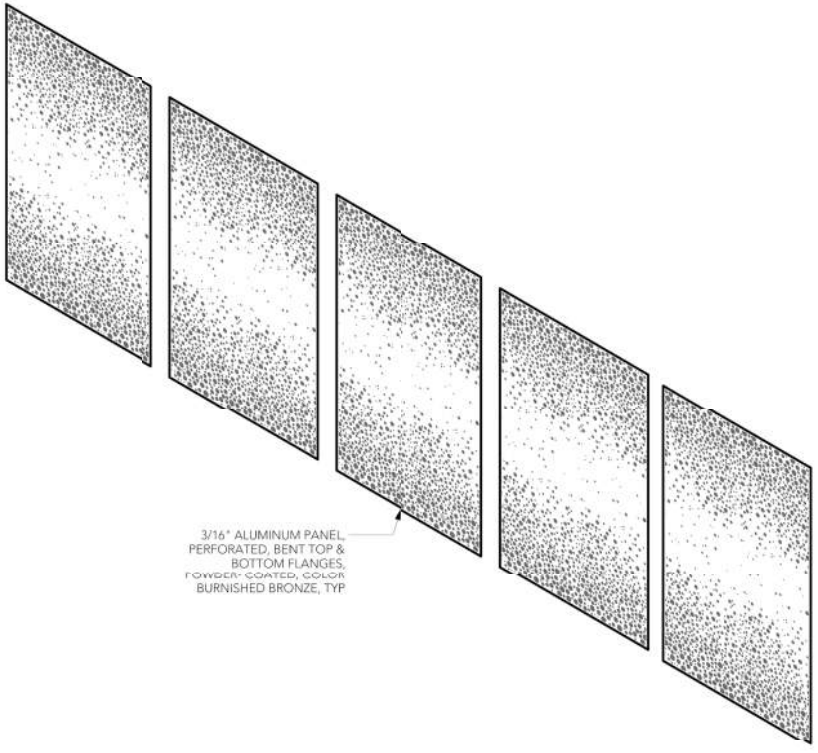


SCALE: N.T.S.

PANEL LAYOUT

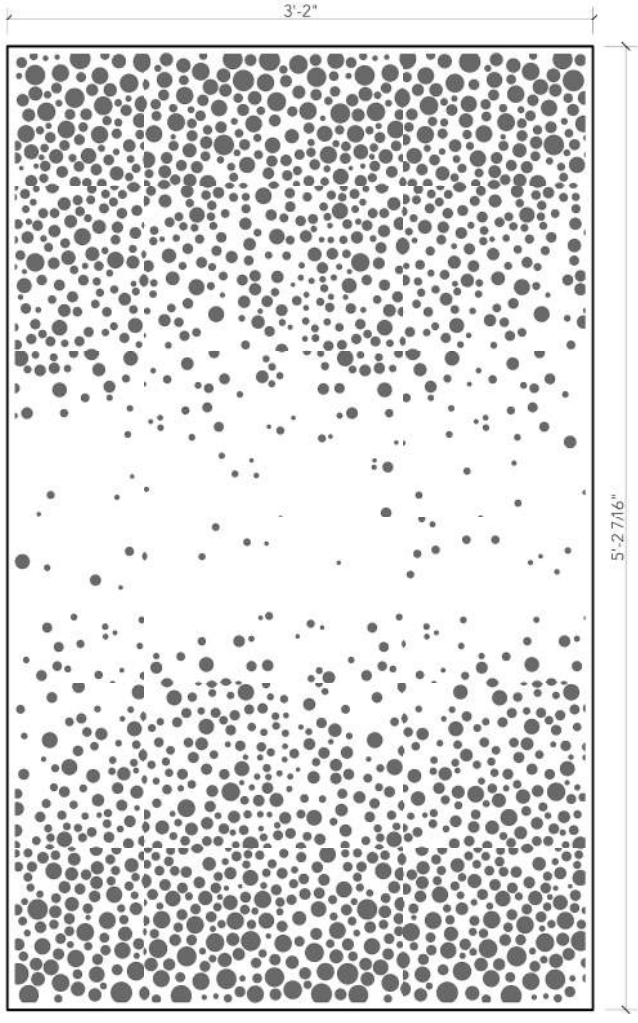


SCALE: N.T.S.

PANEL PATTERN

Millwork

Issue Date: 14 FEB 2019

Revision Date:

| | |
|---|---|
| Item Name | Rope Screen with Canopy Fabrication |
| Description: | Splash: Millwork Rope Screen at Splash |
| Manufacturer: | Renaissance |
| Material: | Refer to drawings for material |
| Design & Construction: | See attached specifications. All listed millwork must be manufactured in accordance with the attached specifications. |
| Pattern/Color: | Refer to the drawings for finishes. Review and approval of finish samples required prior to manufacturing. |
| Metal Frame: | To match RAL 7043 Traffic Grey B |
| Rope Screen: | Refer to RO-01 and Ro-002 for rope specification details |
| Fabric Canopy: | Refer to FAB-001 for specification details |
| Lead Time: | TBD |
| Warranty: | TBD |

## SPECIAL INSTRUCTIONS

MANUFACTURER

Renaissance Contract

Troy Cook 540-342-1448 troy@rclfinc.com

ALTERNATE MANUFACTURER 1

ALTERNATE MANUFACTURER 2

ALTERNATE MANUFACTURER 3

AREAS

Public Space

Pool (Splash)

# ALOFT Hotels G4.0-Public Spaces

## G4.0

## BUILDING PRODUCT MANUAL

# ML-002

Millwork

Issue Date: 14 FEB 2019

Revision Date:

| | |
|---|---|
| Item Name | Ladder Storage |
| Description: | Splash: Millwork Ladder Storage |
| Manufacturer: | Renaissance |
| Material: | Metal |
| Design & Construction: | See attached specifications. All listed millwork must be manufactured in accordance with the attached specifications. |
| Pattern/Color: | Refer to drawings for finishes. Review and approval of finish samples required prior to manufacturing. |
| Metal: | Powdercoated metal finish to match Tiger Drylac RAL 9001 |
| Millwork Hardware: | TBD |
| Lead Time: | TBD |
| Warranty: | TBD |

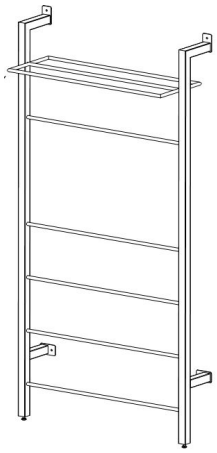

## SPECIAL INSTRUCTIONS

MANUFACTURER

Renaissance Contract

Troy Cook 540-342-1448 troy@rclfinc.com

ALTERNATE MANUFACTURER 1

ALTERNATE MANUFACTURER 2

ALTERNATE MANUFACTURER 3

AREAS

Public Space

Indoor Pool (Splash)

Pool (Splash)

Issue Date: 14 FEB 2019

Revision Date:

| | |
|---|---|
| Item Name | Net Shelving Fabrication |
| Description: | Splash: Millwork for Net Shelving Fabrication |
| Manufacturer: | Renaissance |
| Material: | Refer to Drawings for Materials |
| Design & Construction: | See attached specifications. All listed millwork must be manufactured in accordance with the attached specifications. |
| Pattern/Color: | Refer to drawings for finishes. Review and approval of finish samples required prior to manufacturing. |
| Net: | Refer to NT-001 for Net Specification details. |
| Rope: | Refer to RO-003 for Rope Specification details. |
| Millwork Hardware: | Refer to MH-001, MH-002, and MH-003 for millwork hardware specification details. |
| Lead Time: | TBD |
| Warranty: | TBD |

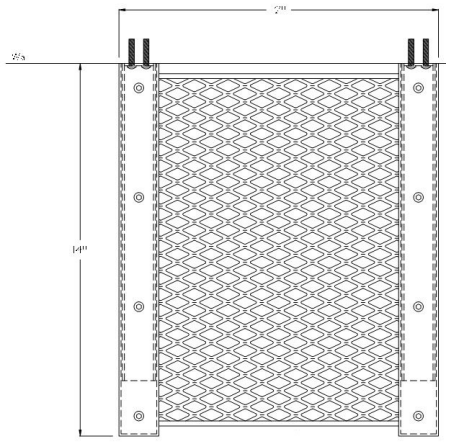

## SPECIAL INSTRUCTIONS

MANUFACTURER

Renaissance Contract

Troy Cook 540-342-1448 troy@rclfinc.com

ALTERNATE MANUFACTURER 1

ALTERNATE MANUFACTURER 2

ALTERNATE MANUFACTURER 3

AREAS

Public Space

Indoor Pool (Splash)

Pool (Splash)

Issue Date: 14 FEB 2019

Revision Date:

| | |
|---|---|
| Item Name | Tactic Bench |
| Description: | Tactic: Millwork Bench |
| Manufacturer: | GC to install |
| Material: | Refer to Drawings for Materials |
| Design & Construction: | See attached specifications. All listed millwork must be manufactured in accordance with the attached specifications. |
| Pattern/Color: | Refer to the drawings for finishes. Review and approval of finish samples required prior to manufacturing. |
| Bench Cushion: | Refer to MR-207 for specification details. |
| Wood Finish: | Refer to WF-004 for specification details. |
| Countertop Finish: | Refer to CT-006 for specification details. |
| Electrical: | Refer to EL-007 for specification details. |
| Lead Time: | TBD |
| Warranty: | TBD |

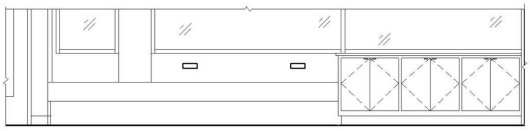

## SPECIAL INSTRUCTIONS

MANUFACTURER

GC to Source / Install

General Contractor

ALTERNATE MANUFACTURER 1

ALTERNATE MANUFACTURER 2

ALTERNATE MANUFACTURER 3

AREAS

Public Space

Meeting (Tactic)

Issue Date: 14 FEB 2019

Revision Date:

| | |
|---|---|
| Item Name | Tactic Built-In Shelves |
| Description: | Tactic: Millwork Built-In Shelves |
| Manufacturer: | GC to install |
| Material: | Refer to drawings for materials. |
| Design & Construction: | See attached specifications. All listed millwork must be manufactured in accordance with the attached specifications. |
| Pattern/Color: | Refer to drawings for finishes. Review and approval of finish samples required prior to manufacturing. |
| Wood Finish: | Refer to WF-004 for wood finish specification details. |
| Lead Time: | TBD |
| Warranty: | TBD |

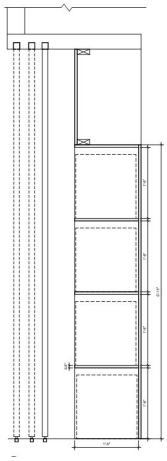

## SPECIAL INSTRUCTIONS

MANUFACTURER

GC to Source / Install

General Contractor

ALTERNATE MANUFACTURER 1

ALTERNATE MANUFACTURER 2

ALTERNATE MANUFACTURER 3

AREAS

Public Space

Meeting (Tactic)

# ML-008

Millwork

Issue Date: 14 FEB 2019

Revision Date:

| | |
|---|---|
| Item Name | Listening Room Ledge |
| Description: | Tactic: Millwork Ledge |
| Manufacturer: | GC to install |
| Material: | See attached specifications. All listed millwork must be manufactured in accordance with the attached specifications. |
| Design & Construction: | See attached specifications. All listed millwork must be manufactured in accordance with the attached specifications. |
| Pattern/Color: | Refer to drawings for finishes. Review and approval of finish samples required prior to manufacturing. |
| Plastic Laminate: | Refer to LA-004 for plastic laminate specification details. |
| Lead Time: | TBD |
| Warranty: | TBD |

## SPECIAL INSTRUCTIONS

MANUFACTURER

GC to Source / Install

General Contractor

ALTERNATE MANUFACTURER 1

ALTERNATE MANUFACTURER 2

ALTERNATE MANUFACTURER 3

AREAS

Public Space

Meeting (Tactic)

Countertops

Issue Date: 28 JUL 2017

Revision Date: 29 JAN 2018

| | |
|---|---|
| Item Name | Vanity Top Surface |
| Description: | Solid surface material at Men's Public Restroom vanity |
| Manufacturer: | 3form |
| Material: | Optical grade engineered resin |
| Color: | Black Out E03 |
| Finish: | Front: Renewable Matte<br>Back: Matte |
| Thickness: | 1/2" |
| Panel Size: | 48" x 96" |
| Maintenance: | 3form Chroma, like all thermoplastic materials should be cleaned periodically. A regular cleaning program will help to maintain the aesthetics and life of the material. 3form recommends the use of Countertop Magic, Novus® No. 1 and Brillianize® plastic cleaners. Rinse or wipe the sheet with lukewarm water. Remove dust and dirt from 3form Chroma with a damp, soft cloth or sponge and a solution of mild soap and/or liquid detergent in water. Rinse or wipe the 3form Chroma again thoroughly with lukewarm water. For more stubborn stains, dirty spots or grease, surface cleaners like Fantastik® or Formula 409® also work well. A scotch brite sponge can also help remove tough grease stains. After all cleaning steps, be sure to rinse thoroughly with lukewarm water.<br>Always use a soft, damp cloth to blot dry. Rubbing with a dry cloth can scratch the material and create a static charge. Never use scrapers or squeegees on 3form Chroma. Also avoid scouring compounds, gasoline, benzene, acetone, carbon tetrachloride, certain deicing fluids, lacquer thinner or other strong solvents. |
| Lead Time: | Flat Sheets - 2 weeks Lead Time + Shipping<br>Custom Made to Order - 6 weeks Lead time + Shipping |
| Warranty: | For a period of 1 year from the date of shipment, 3form warrants that the product will conform to the supplied specification and will be free of defined defects in materials and workmanship. |
| Eco-Feature(s) *as per manufacturer: | Chroma incorporates 38% recycled content* (29% pre-consumer, 9% post-consumer) |

## SPECIAL INSTRUCTIONS

1. Slabs shall contain a minimum of 93% quartz

2. Label of the manufacturer's name shall be permanently stamped on the underside of all countertops (engineered quartz, granite, milk glass, etc.) at least approximately every foot or so in run (or one direction) and at least every 2'-0" apart in the opposite direction. The intent is to guarantee that the label will appear on every top no matter how large or small in an accessible/readable location. As long as that is accomplished the guideline for measurements above is flexible.

3. Label to include percentage of quartz on engineered quartz tops.

MANUFACTURER

3 Form 800.726.0126

Lesley Zitone 801-649-2644 Lesley.Zitone@3-form.com

ALTERNATE MANUFACTURER 1

ALTERNATE MANUFACTURER 2

ALTERNATE MANUFACTURER 3

AREAS

Public Space

Public Restroom - Men's (w/c)

Issue Date: 28 JUL 2017

Revision Date: 29 JAN 2018

| | |
|---|---|
| Item Name | Vanity Top Surface |
| Description: | Solid surface material at Women's Public Restroom vanity |
| Manufacturer: | 3form |
| Material: | Optical grade engineered resin |
| Color: | Ivory E04 + White Out |
| Finish: | Front: Renewable Matte<br>Back: Matte |
| Thickness: | 1/2" |
| Panel Size: | 48" x 96" |
| Maintenance: | 3form Chroma, like all thermoplastic materials should be cleaned periodically. A regular cleaning program will help to maintain the aesthetics and life of the material. 3form recommends the use of Countertop Magic, Novus® No. 1 and Brillianize® plastic cleaners. Rinse or wipe the sheet with lukewarm water. Remove dust and dirt from 3form Chroma with a damp, soft cloth or sponge and a solution of mild soap and/or liquid detergent in water. Rinse or wipe the 3form Chroma again thoroughly with lukewarm water. For more stubborn stains, dirty spots or grease, surface cleaners like Fantastik® or Formula 409® also work well. A scotch brite sponge can also help remove tough grease stains. After all cleaning steps, be sure to rinse thoroughly with lukewarm water.<br>Always use a soft, damp cloth to blot dry. Rubbing with a dry cloth can scratch the material and create a static charge. Never use scrapers or squeegees on 3form Chroma. Also avoid scouring compounds, gasoline, benzene, acetone, carbon tetrachloride, certain deicing fluids, lacquer thinner or other strong solvents. |
| Lead Time: | Flat Sheets - 2 weeks Lead Time + Shipping<br>Custom Made to Order - 6 weeks Lead time + Shipping |
| Warranty: | For a period of 1 year from the date of shipment, 3form warrants that the product will conform to the supplied specification and will be free of defined defects in materials and workmanship. |
| Eco-Feature(s) *as per manufacturer: | Chroma incorporates 38% recycled content* (29% pre-consumber, 9% post-consumer) |

## SPECIAL INSTRUCTIONS

1. Slabs shall contain a minimum of 93% quartz

2. Label of the manufacturer's name shall be permanently stamped on the underside of all countertops (engineered quartz, granite, milk glass, etc.) at least approximately every foot or so in run (or one direction) and at least every 2'-0" apart in the opposite direction. The intent is to guarantee that the label will appear on every top no matter how large or small in an accessible/readable location. As long as that is accomplished the guideline for measurements above is flexible.

3. Label to include percentage of quartz on engineered quartz tops.

MANUFACTURER

3 Form 800.726.0126

Lesley Zitone 801-649-2644 Lesley.Zitone@3-form.com

ALTERNATE MANUFACTURER 1

ALTERNATE MANUFACTURER 2

ALTERNATE MANUFACTURER 3

AREAS

Public Space

Public Restroom - Women's (w/c)

Issue Date: 28 JUL 2017

Revision Date:

| | |
|---|---|
| Item Name | Countertop Surface |
| Description: | ReFuel countertop material |
| Manufacturer: | MS International, Inc. |
| Material: | Quartz |
| Color: | Arctic White |
| Thickness: | Varies - refer to drawings |
| Maintenance: | Mild dish detergent and water. Product does not require sealing. |
| Lead Time: | To be verified |
| Warranty: | Warranted to be free from material defects in manufacturing for a period of 10 years from the completion of the installation. |

## SPECIAL INSTRUCTIONS

1. Slabs shall contain a minimum of 93% quartz

2. Label of the manufacturer's name shall be permanently stamped on the underside of all countertops (engineered quartz, granite, milk glass, etc.) at least approximately every foot or so in run (or one direction) and at least every 2'-0" apart in the opposite direction. The intent is to guarantee that the label will appear on every top no matter how large or small in an accessible/readable location. As long as that is accomplished the guideline for measurements above is flexible.

3. Label to include percentage of quartz on engineered quartz tops.

| MANUFACTURER | AREAS |
|---|---|
| | Public Space |
| | Snack Bar (Re:Fuel) |
| ALTERNATE MANUFACTURER 1 | |
| ALTERNATE MANUFACTURER 2 | |
| ALTERNATE MANUFACTURER 3 | |

Issue Date: 28 JUL 2017

Revision Date:

| | |
|---|---|
| Item Name | Countertop Surface |
| Description: | Countertop at W XYZ bar |
| Manufacturer: | MS International Inc. |
| Material: | Quartz |
| Color: | Snow White |
| Thickness: | Varies - refer to drawings |
| Maintenance: | Mild dish detergent and water. Product does not require sealing. |
| Lead Time: | To be verified |
| Warranty: | Warranted to be free from material defects in manufacturing for a period of 10 years from the completion of the installation. |

## SPECIAL INSTRUCTIONS

1. Slabs shall contain a minimum of 93% quartz

2. Label of the manufacturer's name shall be permanently stamped on the underside of all countertops (engineered quartz, granite, milk glass, etc.) at least approximately every foot or so in run (or one direction) and at least every 2'-0" apart in the opposite direction. The intent is to guarantee that the label will appear on every top no matter how large or small in an accessible/readable location. As long as that is accomplished the guideline for measurements above is flexible.

3. Label to include percentage of quartz on engineered quartz tops.

| MANUFACTURER | AREAS |
|---|---|
| | Public Space |
| | Bar (W XYZ) |
| ALTERNATE MANUFACTURER 1 | |
| ALTERNATE MANUFACTURER 2 | |
| ALTERNATE MANUFACTURER 3 | |

Issue Date: 14 FEB 2019

Revision Date:

| | |
|---|---|
| Item Name | Countertop Surface |
| Description: | Countertop at Tactic |
| Manufacturer: | Caesarstone |
| Material: | Quartz |
| Color: | 4120, Raven |
| Thickness: | Refer to drawings |
| Maintenance: | Soap and water or mild detergent for minor stains. Refer to manufacturer's care & maintenance guide for detailed instructions on proper care and maintenance. |
| Lead Time: | Standard lead time is 14 weeks upon receipt of Purchase Order and Deposit.<br>Lead time is typical and should be verified by the manufacturer. |
| Warranty: | Lifetime warranty |
| Eco-Feature(s) *as per manufacturer: | GreenGuard Certified |

## SPECIAL INSTRUCTIONS

1. Slabs shall contain a minimum of 93% quartz

2. Label of the manufacturer's name shall be permanently stamped on the underside of all countertops (engineered quartz, granite, milk glass, etc.) at least approximately every foot or so in run (or one direction) and at least every 2'-0" apart in the opposite direction. The intent is to guarantee that the label will appear on every top no matter how large or small in an accessible/readable location. As long as that is accomplished the guideline for measurements above is flexible.

3. Label to include percentage of quartz on engineered quartz tops.

MANUFACTURER

Caesarstone

Mikala Rock (818) 380-5768 makala.rock@caesarstoneus.com

ALTERNATE MANUFACTURER 1

ALTERNATE MANUFACTURER 2

ALTERNATE MANUFACTURER 3

AREAS

Public Space

Meeting (Tactic)

Millwork Fabric

Issue Date: 14 FEB 2019

Revision Date:

| | |
|---|---|
| Item Name | Fabric |
| Manufacturer: | Sunbrella |
| Pattern: | 4610-0000 |
| Color: | Turquoise |
| Width: | 60" |
| Content: | 100% Acrylic |
| Finish: | TBD |
| Abrasion: | 40,000 Double Rubs (Wyzenbeck) |
| Quality Standards: | CAL 117, NFPA 260 |
| Lead Time: | 3-7 business days if item is in stock |
| Warranty: | 10 Year limited warranty |

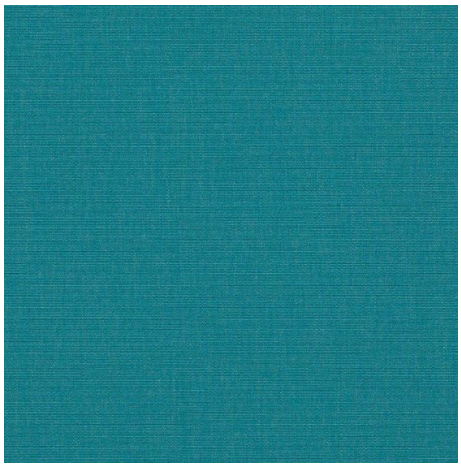

## SPECIAL INSTRUCTIONS

MANUFACTURER

SUNBRELLA 336.221.2211

ALTERNATE MANUFACTURER 1

ALTERNATE MANUFACTURER 2

ALTERNATE MANUFACTURER 3

AREAS

Public Space

Pool (Splash)

Millwork Net

**ALOFT Hotels G4.0-Public Spaces**

**G4.0**

**BUILDING PRODUCT MANUAL**

# NT-001

Net

Issue Date: 14 FEB 2019

Revision Date:

| | |
|---|---|
| Item Name | Net |
| Description: | 12" Tan Diamond Net |
| Manufacturer: | Organized Obie |
| Model Number: | NET-12TAN |
| Color: | Tan |
| Dimensions: | 1" holes<br>Stretches from 12" to 14" in width |
| Material: | Polypro |
| Lead Time: | 3-10 business days |
| Warranty: | TBD |

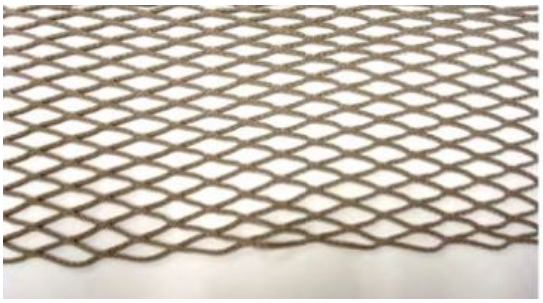

## SPECIAL INSTRUCTIONS

MANUFACTURER

Organized Obie 574-320-0569

Sean Hochstetler shochstetler@obecoinc.com

ALTERNATE MANUFACTURER 1

ALTERNATE MANUFACTURER 2

ALTERNATE MANUFACTURER 3

AREAS

Public Space

Indoor Pool (Splash)

Pool (Splash)

Plastic
Laminate

# LA-001

Revision 1

Plastic Laminate

Issue Date: 28 JUL 2017

Revision Date: 29 JAN 2018

| | |
|---|---|
| Item Name | Plastic Laminate |
| Manufacturer: | Formica |
| Product/Color: | 299-58/ Color - Ebony/ Oxide Matte Finish |
| Lead Time: | 1-2 weeks |
| Warranty: | 1 year warranty |
| Eco-Feature(s) *as per manufacturer: | Green Guard Certified for Low Emitting Materials<br>Recycled Content: General Purpose Grade 9%, Vertical Grade 14%<br>LEED MR5 regional Materials |

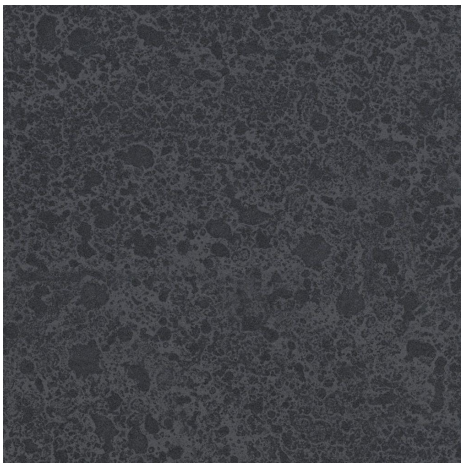

## SPECIAL INSTRUCTIONS

MANUFACTURER

Formica Corporation 800-367-6422

Troy Roberts 443.271.1160 troy.roberts@formica.com

ALTERNATE MANUFACTURER 1

ALTERNATE MANUFACTURER 2

ALTERNATE MANUFACTURER 3

AREAS

Public Space

Bar (W XYZ)

In Touch

Issue Date: 28 JUL 2017

Revision Date: 29 JAN 2018

| | |
|---|---|
| Item Name | Plastic Laminate |
| Manufacturer: | Formica |
| Product/Color: | 459 Brite White/ 58 Matte Finish |
| Lead Time: | 1-2 weeks |
| Warranty: | 1 year warranty |
| Eco-Feature(s) *as per manufacturer: | Green Guard Certified for Low Emitting Materials<br>Recycled Content: General Purpose Grade 9%, Vertical Grade 14%<br>LEED MR5 regional Materials |

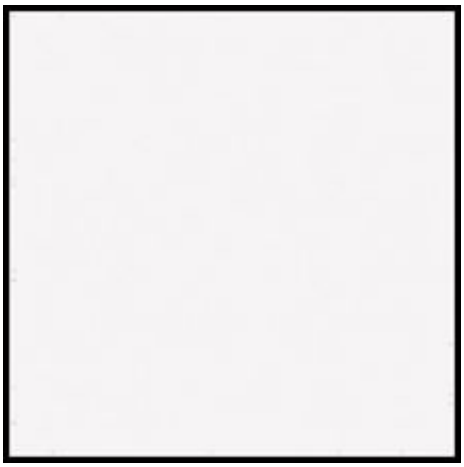

## SPECIAL INSTRUCTIONS

MANUFACTURER

Formica Corporation 800-367-6422

Troy Roberts 443.271.1160 troy.roberts@formica.com

ALTERNATE MANUFACTURER 1

ALTERNATE MANUFACTURER 2

ALTERNATE MANUFACTURER 3

AREAS

Public Space

Engineer

GM Office

Snack Bar (Re:Fuel)

Work Area

Issue Date: 28 JUL 2017
Revision Date: 29 JAN 2018

| | |
|---|---|
| Item Name | Plastic Laminate |
| Manufacturer: | Wilsonart |
| Product/Color: | D354-60 DESIGNER WHITE, MATTE FINISH |
| Lead Time: | |
| Warranty: | 1 year warranty |
| Eco-Feature(s) *as per manufacturer: | GreenGuard Gold Certified |

## SPECIAL INSTRUCTIONS

MANUFACTURER

Wilsonart Laminate

Amy Morgenweck 212-645-9291 morgena@wilsonart.com

ALTERNATE MANUFACTURER 1

ALTERNATE MANUFACTURER 2

ALTERNATE MANUFACTURER 3

AREAS

Public Space

Laundry

**ALOFT Hotels G4.0-Public Spaces**

**G4.0**

**BUILDING PRODUCT MANUAL**

# LA-004

Plastic Laminate

Issue Date: 14 FEB 2019

Revision Date:

| | |
|---|---|
| Item Name | Plastic Laminate |
| Manufacturer: | Formica |
| Product/Color: | Black Riftwood<br>6414<br>Matte, 58 |
| Lead Time: | 1-2 Weeks |
| Warranty: | 1 year warranty |
| Eco-Feature(s) *as per manufacturer: | Green Guard Certified for Low Emitting Materials<br>Recycled Content: General Purpose Grade 9%, Vertical Grade 14%<br>LEED MR5 Regional Materials |

## SPECIAL INSTRUCTIONS

MANUFACTURER

Formica Corporation 800-367-6422

Troy Roberts 443.271.1160 troy.roberts@formica.com

ALTERNATE MANUFACTURER 1

ALTERNATE MANUFACTURER 2

ALTERNATE MANUFACTURER 3

AREAS

Public Space

Fitness Center (Re:Charge)

Meeting (Tactic)

Issue Date: 14 FEB 2019

Revision Date:

| | |
|---|---|
| Item Name | Plastic Laminate |
| Description: | Markerboard Laminate |
| Manufacturer: | Formica |
| Product/Color: | 927-90/Folkstone<br>Gloss |
| Lead Time: | 1-2 weeks |
| Warranty: | 1 year warranty |
| Eco-Feature(s) *as per manufacturer: | Green Guard Certified for Low Emitting Materials<br>Recycled Content: General Purpose Grade 9%, Vertical Grade 14% LEED MR5<br>Regional Materials |

## SPECIAL INSTRUCTIONS

MANUFACTURER

Formica Corporation 800-367-6422

Troy Roberts 443.271.1160 troy.roberts@formica.com

ALTERNATE MANUFACTURER 1

ALTERNATE MANUFACTURER 2

ALTERNATE MANUFACTURER 3

AREAS

Public Space

Meeting (Tactic)

# LA-006

Plastic Laminate

Issue Date: 14 FEB 2019

Revision Date:

| | |
|---|---|
| Item Name | Plastic Laminate |
| Description: | Magnetic Markerboard Backing |
| Manufacturer: | Formica |
| Product/Color: | M4702-00 |
| Lead Time: | 1-2 weeks |
| Warranty: | 1 year warranty |
| Eco-Feature(s) *as per manufacturer: | Green Guard Certified for Low Emitting Materials<br>Recycled Content: General Purpose Grade 9%, Vertical Grade 14%<br>LEED MR5 Regional Materials |

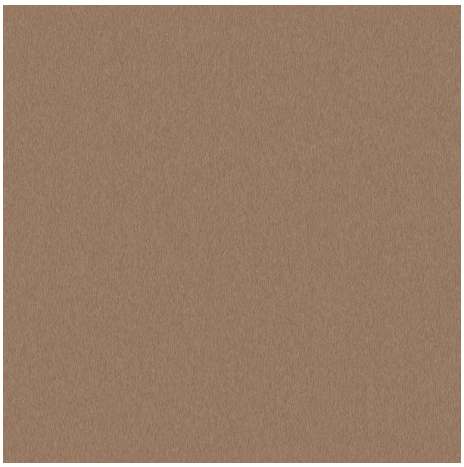

## SPECIAL INSTRUCTIONS

MANUFACTURER

Formica Corporation 800-367-6422

Troy Roberts 443.271.1160 troy.roberts@formica.com

ALTERNATE MANUFACTURER 1

ALTERNATE MANUFACTURER 2

ALTERNATE MANUFACTURER 3

AREAS

Public Space

Meeting (Tactic)

Issue Date: 14 FEB 2019

Revision Date:

| | |
|---|---|
| Item Name | Plastic Laminate |
| Description: | Plastic laminate at shelf |
| Manufacturer: | Formica |
| Product/Color: | Custom Color to Match Pantone 612 C<br>Finish: Matte |
| Lead Time: | TBD |
| Warranty: | 1 Year |
| Eco-Feature(s) *as per manufacturer: | Green Guard Certified for Low Emitting Materials |

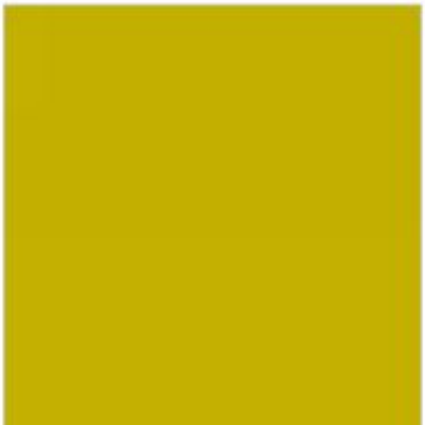

## SPECIAL INSTRUCTIONS

MANUFACTURER

Formica Corporation 800-367-6422

Troy Roberts 443.271.1160 troy.roberts@formica.com

ALTERNATE MANUFACTURER 1

ALTERNATE MANUFACTURER 2

ALTERNATE MANUFACTURER 3

AREAS

Millwork Rope

# RO-001

Rope

Issue Date: 14 FEB 2019

Revision Date:

| | |
|---|---|
| Item Name | Rope |
| Description: | 24 Strand Rope, Blue Craze |
| Manufacturer: | Knot and Rope Supply |
| Model Number: | 0811 |
| Color: | Blue & Green |
| Dimensions: | 7/16" Diameter |
| Material: | Polyester |
| Weight: | 6.1 LBs per 100 ft Tensile |
| Lead Time: | 5-7 business days |
| Warranty: | TBD |

## SPECIAL INSTRUCTIONS

MANUFACTURER

Knot and Rope Supply 419-873-8300

ALTERNATE MANUFACTURER 1

ALTERNATE MANUFACTURER 2

ALTERNATE MANUFACTURER 3

AREAS

Public Space

Pool (Splash)

Issue Date: 14 FEB 2019

Revision Date:

| | |
|---|---|
| Item Name | Rope |
| Description: | Static Line, 7/16 HTP - Red |
| Manufacturer: | Knot and Rope Supply |
| Model Number: | 0748 |
| Color: | Red |
| Dimensions: | 7/16" Diameter |
| Material: | Polyester |
| Lead Time: | 5-7 business days |
| Warranty: | TBD |

## SPECIAL INSTRUCTIONS

MANUFACTURER

Knot and Rope Supply 419-873-8300

ALTERNATE MANUFACTURER 1

ALTERNATE MANUFACTURER 2

ALTERNATE MANUFACTURER 3

AREAS

Public Space

Pool (Splash)

Millwork
Wood Finish

Issue Date: 14 FEB 2019

Revision Date:

| | |
|---|---|
| Item Name | Wood Stain |
| Description: | Ash Stained Wood |
| Manufacturer: | Veneer Specialists |
| Product/Color: | SAS-0677/Flat Cut, Ash |
| Finish: | Matte |
| Repeat: | N/A |
| Lead Time: | 4-5 Weeks |
| Warranty: | TBD |
| Eco-Feature(s) *as per manufacturer: | N/A |

## SPECIAL INSTRUCTIONS

MANUFACTURER

| | |
|---|---|
| Veneer Specialists | 630-754-8550 |
| Dina Thomas | 630-754-8550 Ext. 110 |

ALTERNATE MANUFACTURER 1

ALTERNATE MANUFACTURER 2

ALTERNATE MANUFACTURER 3

AREAS

Public Space

Meeting (Tactic)

Millwork
Cutsheets

| |
|---|
| Sales Order: Pending |
| Item: SPF-04A |
| Finish: To be Approved |
| Rope: To be Approved / Indicated on drawing by customer |
| Awning: To be Approved |

# RENAISSANCE

☐ approved
☐ approved as noted
☐ not approved revise as noted

authorized signature date

Custom Rope Screen with Canopy

No. RF-G-0532 | Date 12/14/18

UNDERWRITERS LABORATORIES INC. LISTED

By MBC

Scale NTS

PHONE: 540.342.1548 FAX: 540.342.1417 WEB: RCLFINC.COM

Renaissance reserves the right to make adjustments during fabrication to ensure product integrity, performance, and meet applicable UL standards.

Top View

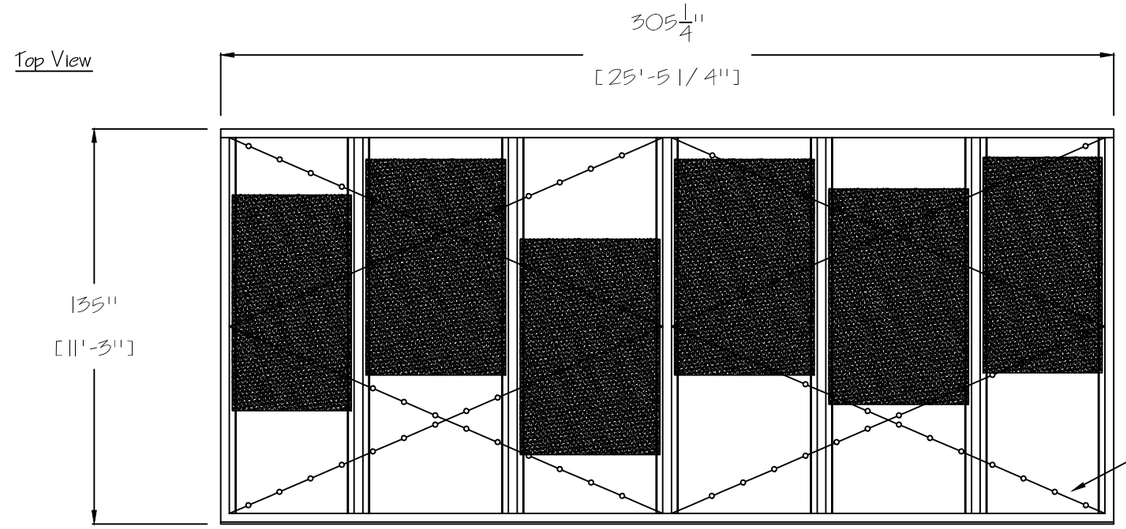


Front View

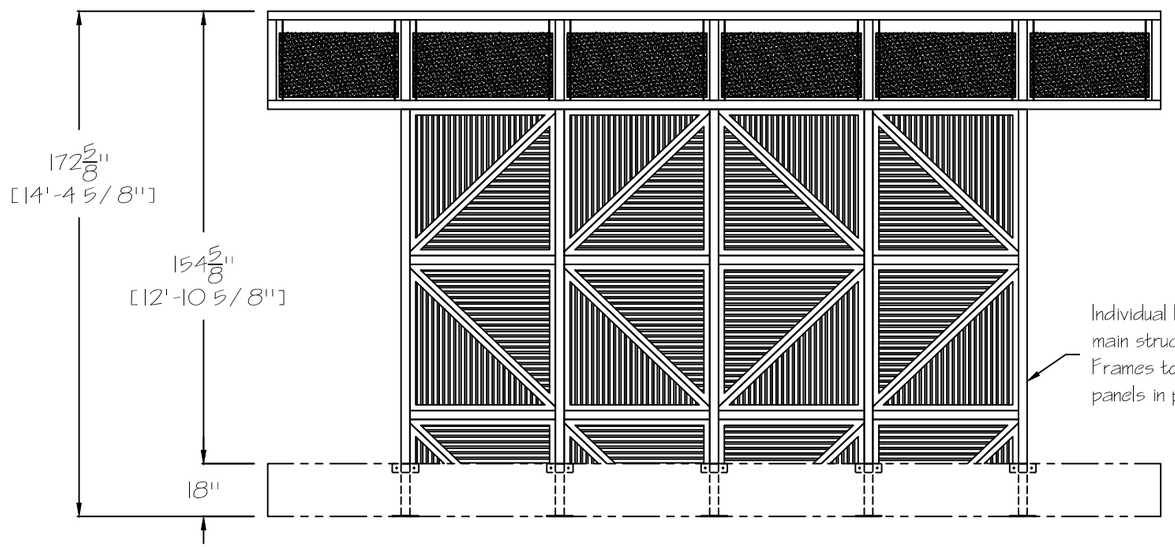


Side View

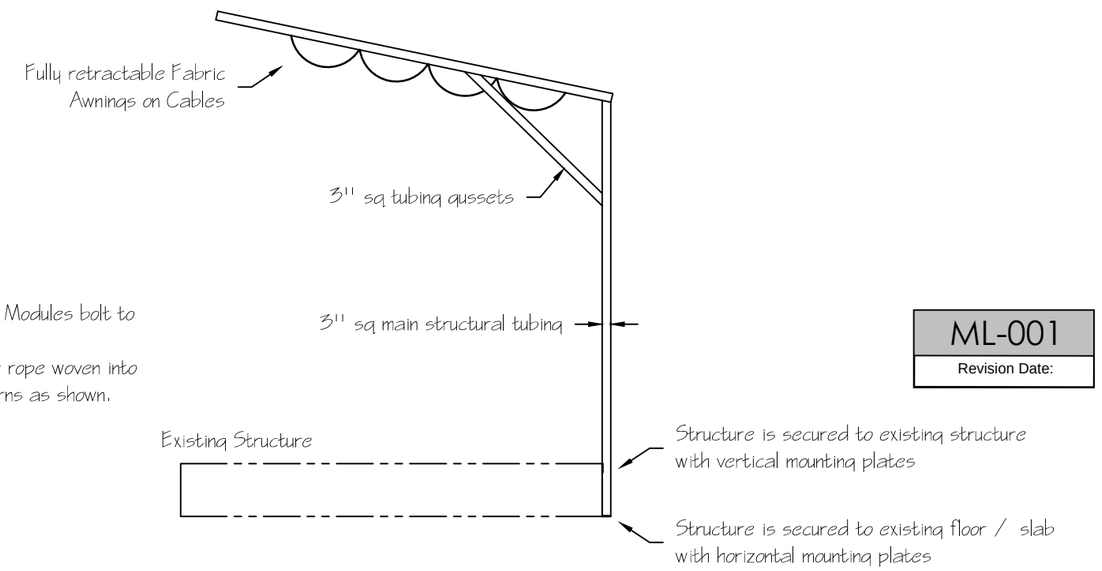


ML-001

Revision Date:

Top View

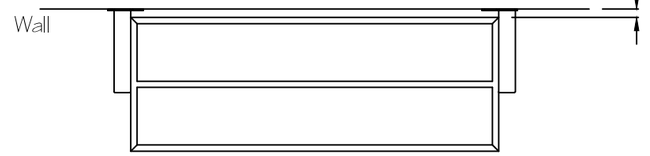


Sales Order: Pending

Item: n/ a

Finish: Powder Coat RAL 9001 - to be approved
Exterior Polyester PC for Indoor / Outdoor use

# RENAISSANCE

☐ approved
☐ approved as noted
☐ not approved revise as noted

authorized signature date

Custom Storage Ladder, 72" Height

No. RF-G-0530-72 | Date 12/28/18

UNDERWRITERS LABORATORIES INC. LISTED

By MBC

Scale NTS

PHONE: 540.342.1548 FAX: 540.342.1417 WEB: RCLFINC.COM

Renaissance reserves the right to make adjustments during fabrication to ensure product integrity, performance, and meet applicable UL standards.

* new shorter 72" version derived from 96" height version _MBC - 12.28.18

Front View

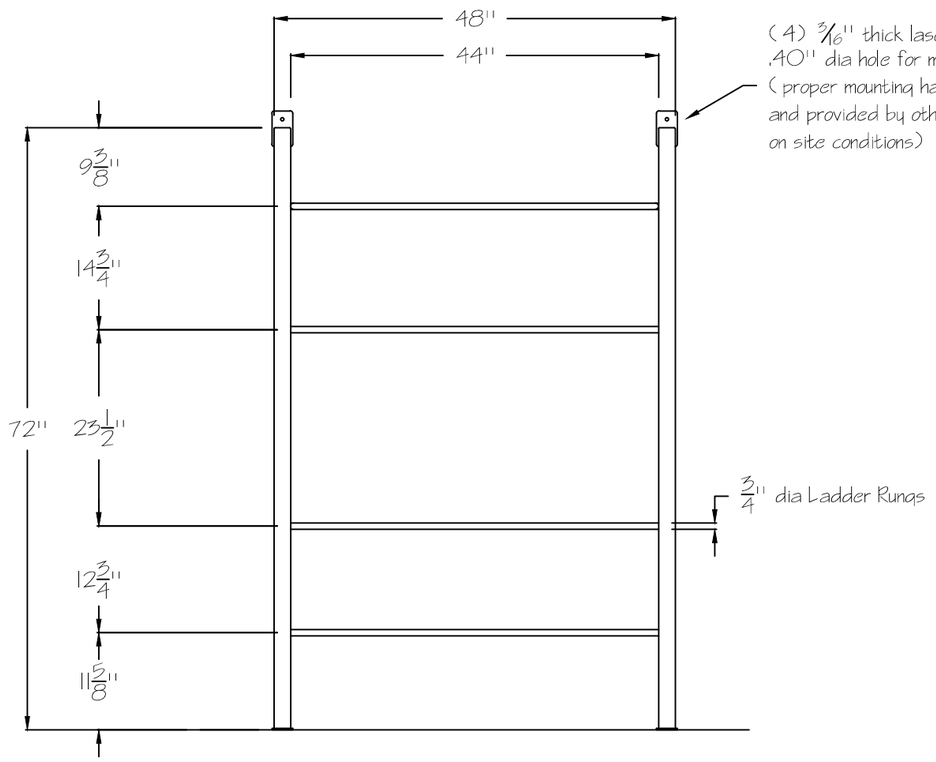


Side View

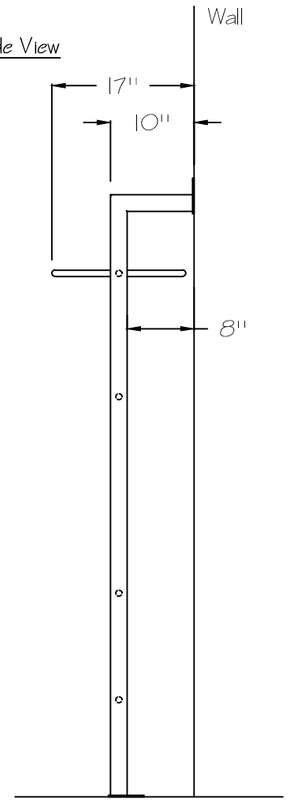


Storage Loop with Center Rung, fabricated from 3/4" dia tube

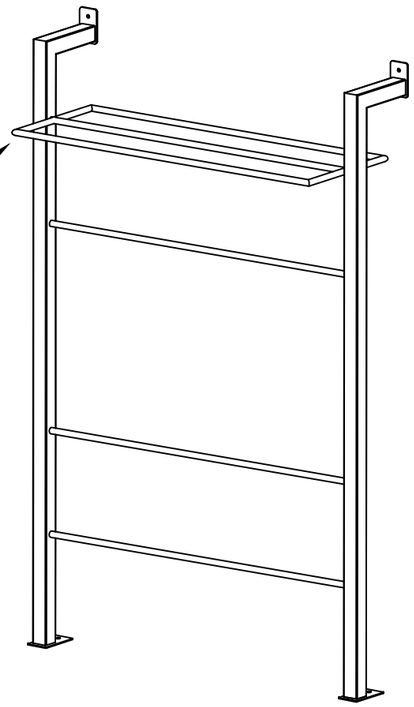

ML-002

Revision Date:

Top View

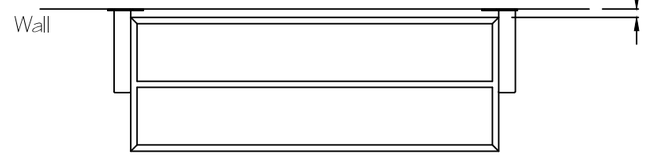


Sales Order: Pending

Item: SPF-06

Finish: Powder Coat RAL 9001 - to be approved
Exterior Polyester PC for Indoor / Outdoor use

# RENAISSANCE

☐ approved
☐ approved as noted
☐ not approved revise as noted

authorized signature date

Custom Storage Ladder, 96'' Height

No. RF-G-0530 | Date 12/13/18

UNDERWRITERS LABORATORIES INC. LISTED

By MBC

Scale NTS

PHONE: 540.342.1548 FAX: 540.342.1417 WEB: RCLFINC.COM

Renaissance reserves the right to make adjustments during fabrication to ensure product integrity, performance, and meet applicable UL standards.

* additional notes made to mounting hardware, exterior PC, adjustable feet, revised OAH from 108'' to 96'' _MBC - 12.28.18

Front View

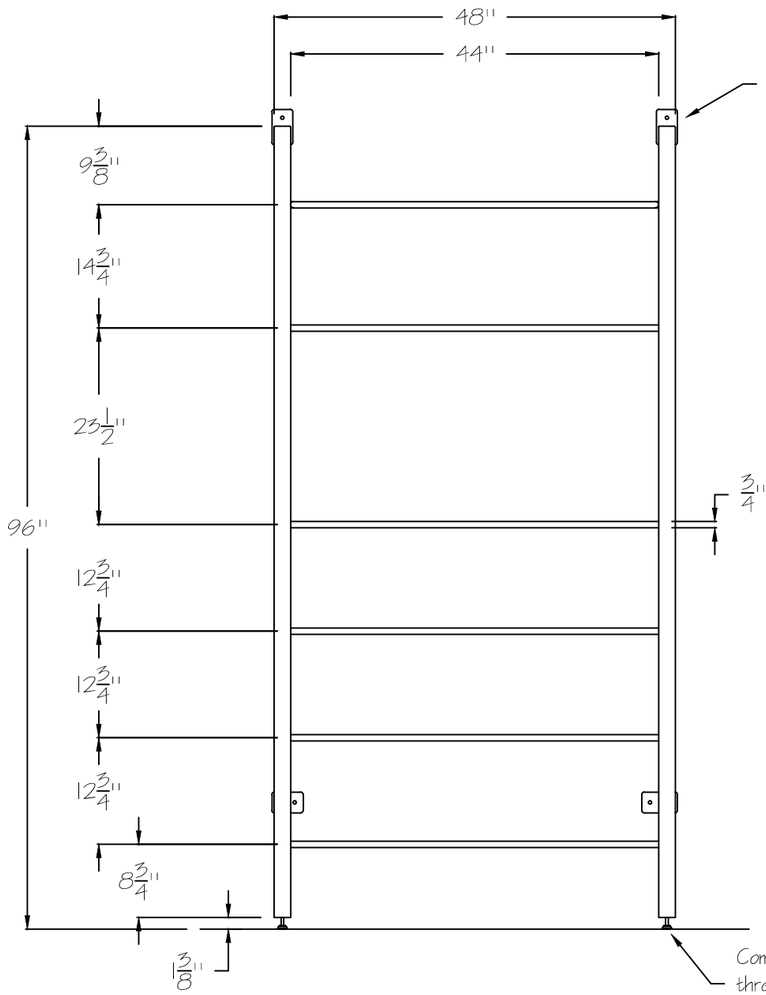


(4) 3/16'' thick laser cut Mounting Plates, .40'' dia hole for mounting hardware (proper mounting hardware to be specified and provided by others / installers based on site conditions)

3/4'' dia Ladder Rungs

Commercial grade adjustable feet threaded into bushings, suitable for indoor / outdoor use

Side View

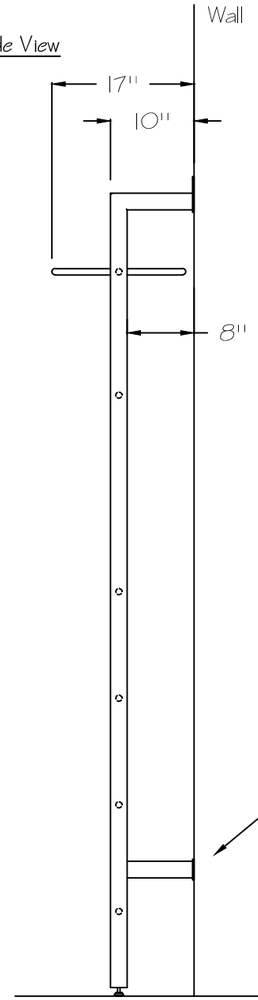


Additional support arms prevents ladder from kicking out at bottom

Storage Loop with Center Rung, fabricated from 3/4'' dia tube

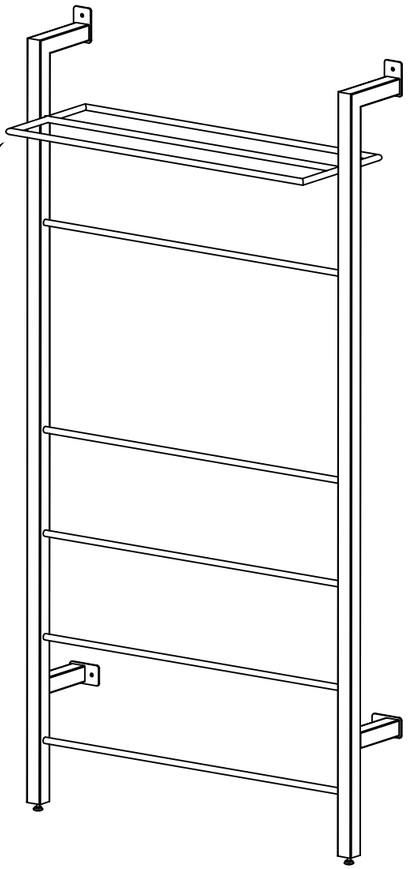

ML-002

Revision Date:

Sales Order: Pending

Item: SPF-09A

Finish: To be Approved
Exterior Polyester PC for Indoor / Outdoor use

# RENAISSANCE

☐ approved
☐ approved as noted
☐ not approved revise as noted

authorized signature date

Custom Net Shelving

No. RF-G-0531 Date 12/13/18

UNDERWRITERS LABORATORIES INC. LISTED

By MBC

Scale 3/8"=1"

PHONE: 540.342.1548 FAX: 540.342.1417 WEB: RCLFINC.COM

Renaissance reserves the right to make adjustments during fabrication to ensure product integrity, performance, and meet applicable UL standards.

* added notes to Powder Coat and Mounting Hardware _MBC - 12.28.18

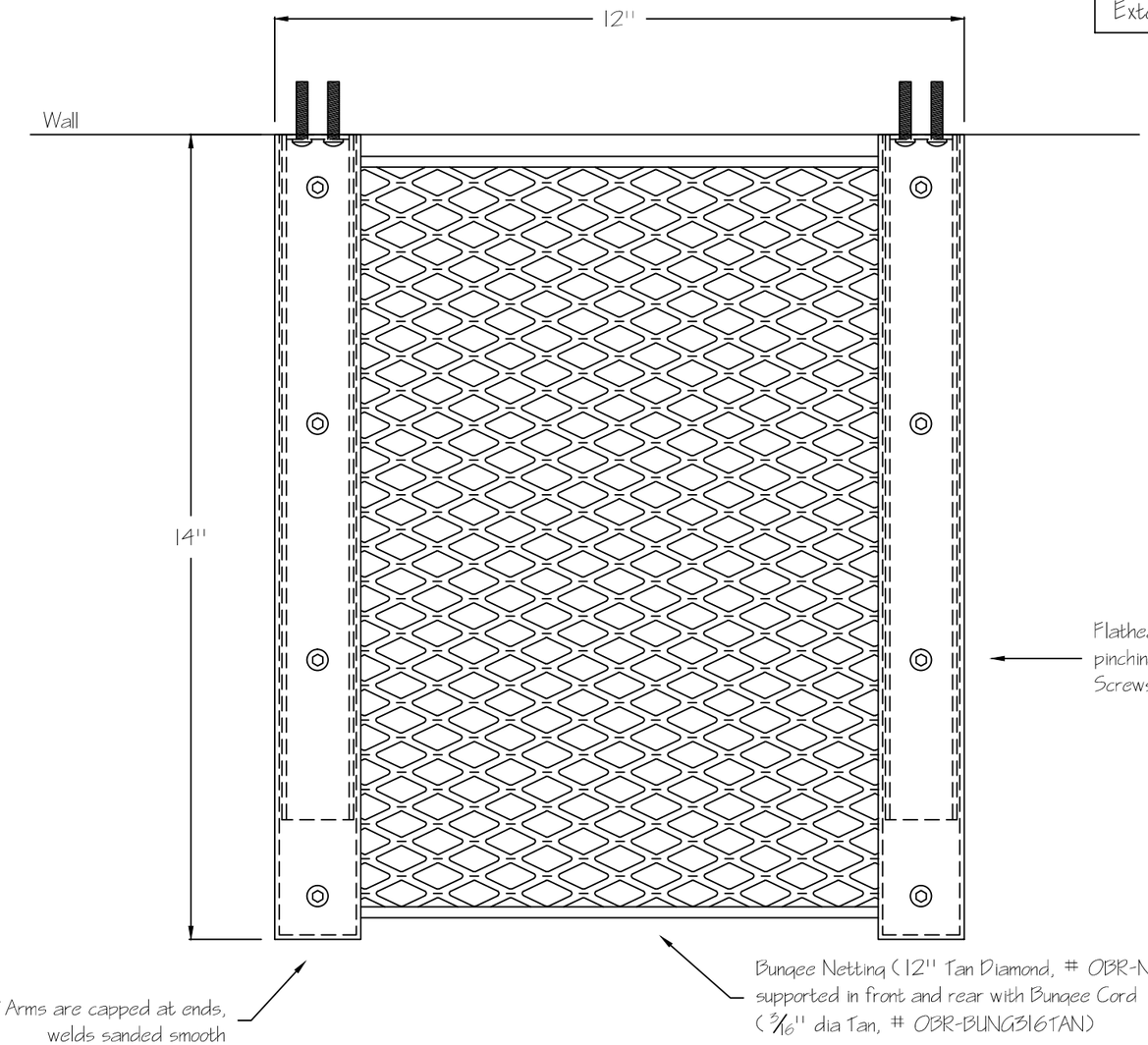


Flathead Screws secure Netting to Shelf Arms by pinching netting between Arms and Cover Bars. Screws also secure Arms to Support Channels.

Bungee Netting (12" Tan Diamond, # OBR-NET-12TAN) supported in front and rear with Bungee Cord (3/16" dia Tan, # OBR-BUNG316TAN)

Shelf Arms are capped at ends, welds sanded smooth

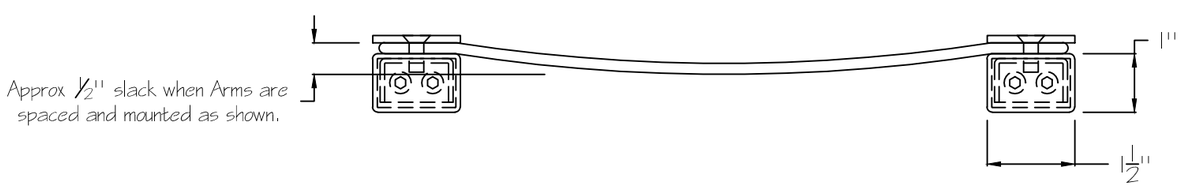


Approx 1/2" slack when Arms are spaced and mounted as shown.

**Installation**

- Mount Concealed Support Channel to wall using appropriate hardware supplied by others
* (2) Mounting Screws / Bolts per Support Cannel required to prevent Shelf Tubing from rotating.
- Slide Shelf Tubing over Support Channels and secure using provided, color matched hardware

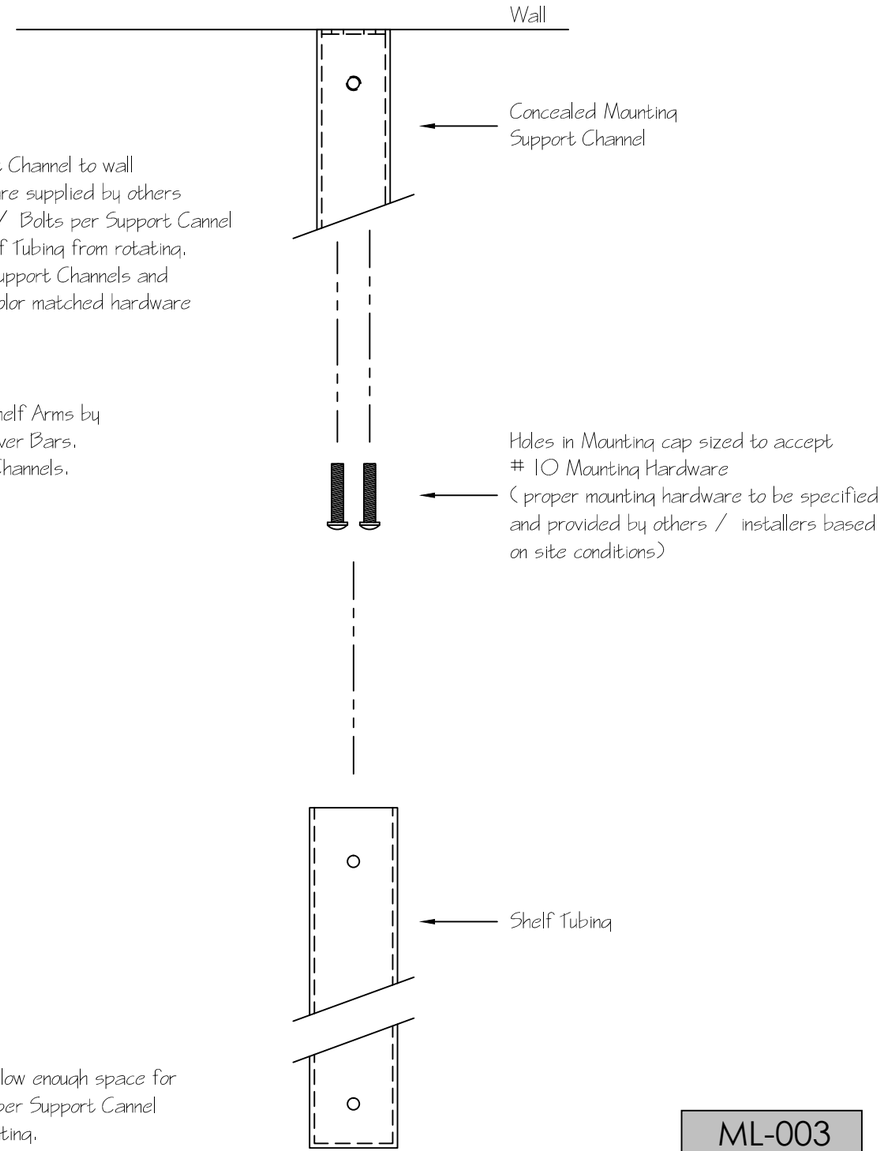


Rectangular Tubing required to allow enough space for (2) Mounting Screws / Bolts per Support Cannel to prevent Shelf Tubing from rotating.

ML-003

Revision Date:

Plumbing

!"#

! $ !

% &

February 12, 2019

| | |
|---|---|
| 6+5 | 3RRG6KRZHU |
| 3/ | .2 |
| 3/ | 02 |
| 3/ | |
| 3/ | |
| 3/ | .2 |
| 3/ | 02 |
| 3/ | .2 |
| 3/ | 02 |
| 3/ | |
| 7$ | |

| | |
|---|---|
| 61. | 3XEOLF5HVWURRP 6LQN |
| 3/ | ! |
| 3/ | |

| | |
|---|---|
| 61. | (PSOR\HH%UHDNURRP . LWFKHQ6LQN |
| 3/ | " |
| 3/ | |

| | |
|---|---|
| 61. | (PSOR\HH5HVWURRP 6LQN |
| 3/ | " |
| 3/ | |

| | |
|---|---|
| 61. | 3RRG5HVWURRP 6LQN |
| 3/ | " |
| 3/ | " |
| 3/ | #$ |
| 3/ | #$ |
| 3/ | " " % |
| 3/ | |
| 3/ | % |

| | |
|---|---|
| 61. | /DXQGU\5RRP 6LQN |
| 3/ | " |
| 3/ | |

| | |
|---|---|
| : &/ | : DWU&ORVHW |
| 3/ | & |
| 3/ | & |
| 3/ 6/ | & |
| 3/ 02 | & |

| | |
|---|---|
| : &/ | : DWU&ORVHW3RRG5HVWURRP |
| 3/ | & |
| 3/ | & |

| | |
|---|---|
| **URN-01 Urinal** | |
| PL-306 | Waterless Urinal |
| | |
| **MOP-01 Mop Sink** | |
| PL-105 | Mop Sink |
| PL-204-FI | Faucet |
| PL-204-MO | Faucet (Alternate) |
| | |
| **SVS-01 Service Sink** | |
| PL-107 | Sink |
| PL-206 | Faucet |

Issue Date: 28 JUL 2017

Revision Date:

| | |
|---|---|
| Item Name | Under Counter Lavatory |
| Description: | Under counter lavatory with overflow |
| Manufacturer: | Kohler |
| Product: | K-2883-0 (Vertical Undercounter Lavatory) |
| Dimensions: | 15-3/4" Diameter x 6-3/4" H overall<br>13-3/4" Diameter basin area |
| Content: | Vitreous China |
| Finish: | White |
| Quality Standards: | ASME A112.19.2/CSA B45.1<br>ADA<br>ICC/ANSI A117.1 |
| Lead Time: | Standard lead time is a minimum of 8 weeks from receipt of Purchase Order and Deposit. Lead time is typical and should be verified by manufacturer. |
| Warranty: | One-Year Limited Warranty |
| Eco-Feature(s) *as per manufacturer: | Not applicable |

## SPECIAL INSTRUCTIONS

MANUFACTURER

Kohler Co.

Anupa Maru (703) 371.4269 Anupa.Maru@Kohler.com

ALTERNATE MANUFACTURER 1

ALTERNATE MANUFACTURER 2

ALTERNATE MANUFACTURER 3

AREAS

Public Space

Public Restroom - Men's (w/c)

Public Restroom - Women's (w/c)

Issue Date: 28 JUL 2017

Revision Date: 14 FEB 2019

| | |
|---|---|
| Item Name | Wall-Mounted Lavatory |
| Description: | Purist Wading Pool above counter/wall mount bathroom sink |
| Manufacturer: | Kohler |
| Product: | K-2314-0 |
| Dimensions: | 23 1/2"W x 24"L x 4 1/16" H |
| Content: | Porcelain |
| Finish: | White |
| Quality Standards: | ASME A112.19.2/CSA B45.1<br>All applicable US Federal and State material regulations<br>ADA<br>ICC/ANSI A117.1<br>CSA B651<br>OBC |
| Lead Time: | Standard lead time is a minimum of 8 weeks from receipt of Purchase Order and Deposit. Lead time is typical and should be verified by manufacturer. |
| Warranty: | One-Year Limited Warranty |
| Eco-Feature(s) *as per manufacturer: | Not applicable |

## SPECIAL INSTRUCTIONS

MANUFACTURER

Kohler Co.

Anupa Maru (703) 371.4269 Anupa.Maru@Kohler.com

ALTERNATE MANUFACTURER 1

ALTERNATE MANUFACTURER 2

ALTERNATE MANUFACTURER 3

AREAS

Public Space

Pool (Splash) Restroom (w/c)

Issue Date: 28 JUL 2017

Revision Date:

| | |
|---|---|
| Item Name | Wall-Mounted Lavatory |
| Description: | Wall-mounted lavatory with overflow |
| Manufacturer: | Kohler |
| Product: | K-2084-0 (SOHO Wall-Mount Bathroom Sink) |
| Dimensions: | 20" W x 18" D |
| Content: | Vitreous China |
| Finish: | White |
| Quality Standards: | ASME A112.19.2/CSA B45.1<br>All applicable US Federal and State material regulations<br>ADA<br>ICC/ANSI A117.1<br>CSA B651<br>OBC |
| Lead Time: | Standard lead time is a minimum of 8 weeks from receipt of Purchase Order and Deposit. Lead time is typical and should be verified by manufacturer. |
| Warranty: | One-Year Limited Warranty |
| Eco-Feature(s) *as per manufacturer: | Not applicable |

## SPECIAL INSTRUCTIONS

MANUFACTURER

Kohler Co.

Anupa Maru (703) 371.4269 Anupa.Maru@Kohler.com

ALTERNATE MANUFACTURER 1

ALTERNATE MANUFACTURER 2

ALTERNATE MANUFACTURER 3

AREAS

Public Space

Employee Toilet (w/c)

Issue Date: 28 JUL 2017

Revision Date: 29 JAN 2018

| | |
|---|---|
| Item Name | Mop Sink |
| Description: | Molded stone mop service basin |
| Manufacturer: | FIAT |
| Product: | MSB-2424 |
| Dimensions: | 24" W x 24" D x 10" H |
| Content: | Metal |
| Finish: | White |
| Quality Standards: | Not applicable |
| Lead Time: | 2 weeks |
| Warranty: | Product be be warranted against defects in material and workmanship as it is owned by the original purchaser for a period of 1 year from the date of purchase. |
| Eco-Feature(s) *as per manufacturer: | Not applicable |
| Shipping Weight | 50 lbs |

## SPECIAL INSTRUCTIONS

MANUFACTURER

| | |
|---|---|
| FIAT | (800) 387-0369 |
| Customer Service / Sales | (800) 387-0369 info@fiat.ca |

ALTERNATE MANUFACTURER 1

ALTERNATE MANUFACTURER 2

ALTERNATE MANUFACTURER 3

AREAS

Public Space

Janitor

Issue Date: 28 JUL 2017

Revision Date: 25 MAY 2018

| | |
|---|---|
| Item Name | Sink |
| Description: | Single Bowl Sink |
| Manufacturer: | ELKAY |
| Product: | LRAD202240 (Lusterstone Single Bowl Top Mount Sink) |
| Dimensions: | 19.5" W x 22" D x 4" H |
| Content: | 18 Gauge Stainless Steel |
| Finish: | Lustertone |
| Quality Standards: | ADA & ICC A117.1<br>ASME A112.19.3/CSA B45.4<br>BUY AMERICAN ACT |
| Lead Time: | To be verified |
| Warranty: | Limited Lifetime Warranty |
| Eco-Feature(s) *as per manufacturer: | Not applicable |

## SPECIAL INSTRUCTIONS

MANUFACTURER

ELKAY (630) 574-8484

Alex Stackhouse 704-405-3043 alexs@repsouth.com

ALTERNATE MANUFACTURER 1

ALTERNATE MANUFACTURER 2

ALTERNATE MANUFACTURER 3

AREAS

Public Space

Break Room

Issue Date: 28 JUL 2017

Revision Date: 29 JAN 2018

| | |
|---|---|
| Item Name | Sink |
| Description: | One piece, extra deep laundry/utility tub |
| Manufacturer: | E.L. Mustee & Sons |
| Product: | 27F UTILATWIN |
| Dimensions: | 40" W x 24" D |
| Content: | Thermoplastic |
| Finish: | White |
| Quality Standards: | International Association of Plumbing and Mechanical Officials (IAPMO)® Listed<br>Warnock Hersey® (Canada) Listed–CSA test standards: Laundry Tray - #B45.0 and #B45.5; Drain - #B125<br>American National Standards Institute (ANSI)–Specification Z 124-2011 |
| Lead Time: | To be verified |
| Warranty: | One year warranty from the date of sale to the consumer that our products will be free of defects in material and workmanship. |
| Eco-Feature(s) *as per manufacturer: | ANSI Z 124-2011 |

## SPECIAL INSTRUCTIONS

MANUFACTURER

E.L. Mustee & Sons, Inc. (216) 267-3100

Marcus and Weimer, Inc. (440) 247-3570

ALTERNATE MANUFACTURER 1

ALTERNATE MANUFACTURER 2

ALTERNATE MANUFACTURER 3

AREAS

Public Space

Laundry

Issue Date: 14 FEB 2019

Revision Date:

| | |
|---|---|
| Item Name | Sink Drain |
| Description: | Bathroom Sink Grid Drain without Overflow |
| Manufacturer: | Kohler |
| Product: | K-7129-VS |
| Dimensions: | 2 1/8"W x 5 1/8"H |
| Content: | Brass |
| Finish: | Vibrant Stainless |
| Quality Standards: | ASME A112.18.2/CSA B125.2 |
| Lead Time: | Standard lead time is a minimum of 8 weeks from receipt of Purchase Order and Deposit. Lead time is typical and should be verified by manufacturer. |
| Warranty: | 1 Year Limited Warranty |
| Eco-Feature(s) *as per manufacturer: | N/A |

## SPECIAL INSTRUCTIONS

MANUFACTURER

Kohler Co.

Anupa Maru (703) 371.4269 Anupa.Maru@Kohler.com

ALTERNATE MANUFACTURER 1

ALTERNATE MANUFACTURER 2

ALTERNATE MANUFACTURER 3

AREAS

Public Space

Pool (Splash) Restroom (w/c)

Issue Date: 14 FEB 2019

Revision Date:

| | |
|---|---|
| Item Name | P-Trap |
| Description: | Adjustable P-trap with long tubing outlet |
| Manufacturer: | Kohler |
| Product: | K-9018-CP |
| Dimensions: | 14 1/2"L x 4 2/8" H |
| Content: | Brass |
| Finish: | Polished Chrome |
| Quality Standards: | ASME A112.18.2/CSA B125.2 |
| Lead Time: | Standard lead time is a minimum of 8 weeks from receipt of Purchase Order and Deposit. Lead time is typical and should be verified by manufacturer. |
| Warranty: | 1 Year Limited Warranty |
| Eco-Feature(s) *as per manufacturer: | N/A |
| Notes: | Refer to Specification PL-110 for P-Trap Cover |

## SPECIAL INSTRUCTIONS

MANUFACTURER

Kohler Co.

Anupa Maru (703) 371.4269 Anupa.Maru@Kohler.com

ALTERNATE MANUFACTURER 1

ALTERNATE MANUFACTURER 2

ALTERNATE MANUFACTURER 3

AREAS

Public Space

Pool (Splash) Restroom (w/c)

Issue Date: 14 FEB 2019

Revision Date:

| | |
|---|---|
| Item Name | P-Trap Cover |
| Description: | Insulated P-trap Cover |
| Manufacturer: | Commercial Specialities Inc |
| Product: | Trubro 102E-Z Pipe Wrap Kit 102EZ |
| Dimensions: | Refer to cutsheet |
| Content: | Vinyl |
| Finish: | White |
| Quality Standards: | ADA compliant |
| Lead Time: | 1-2 business days |
| Warranty: | TBD |
| Eco-Feature(s) *as per manufacturer: | N/A |

## SPECIAL INSTRUCTIONS

MANUFACTURER

Commercial Specialties Inc 847-545-9900

ALTERNATE MANUFACTURER 1

ALTERNATE MANUFACTURER 2

ALTERNATE MANUFACTURER 3

AREAS

Public Space

Pool (Splash) Restroom (w/c)

Issue Date: 14 FEB 2019

Revision Date:

| | |
|---|---|
| Item Name | Sink Bracket Kit |
| Description: | Purist Bathroom Sink Bracket Kit |
| Manufacturer: | Kohler |
| Product: | K-9583-NA |
| Dimensions: | 3"W x 17"L x 7 13/16" H |
| Content: | Stainless Steel |
| Finish: | N/A |
| Quality Standards: | |
| Lead Time: | TBD |
| Warranty: | 1 Year Limited Warranty |
| Eco-Feature(s) *as per manufacturer: | N/A |

## SPECIAL INSTRUCTIONS

MANUFACTURER

Kohler Co.

Anupa Maru (703) 371.4269 Anupa.Maru@Kohler.com

ALTERNATE MANUFACTURER 1

ALTERNATE MANUFACTURER 2

ALTERNATE MANUFACTURER 3

AREAS

Public Space

Pool (Splash) Restroom (w/c)

Issue Date: 28 JUL 2017

Revision Date:

| | |
|---|---|
| Item Name | Faucet |
| Description: | Goose-neck touchless deck-mount faucet without mixer; includes 30-year Hybrid Energy Cell; vandal-resistant aerator |
| Manufacturer: | Kohler |
| Product: | K-7518-CP (Electronic Faucet) |
| Dimensions: | 3" W x 12-1/8" H<br>6-3/16" spout reach |
| Flow Rate: | 0.5 gpm (1.9 lpm) |
| Drain Option: | K-7129-A-CP (grid drain with overflow) |
| Content: | Brass |
| Finish: | Polished Chrome |
| Quality Standards: | ASME A112.18.1/CSA B125.1 NSF 372<br>All applicable US Federal and State material regulations<br>DOE - Energy Policy Act 1992<br>ADA<br>ICC/ANSI A117.1<br>CSA B651<br>OBC |
| Lead Time: | Standard lead time is a minimum of 8 weeks from receipt of Purchase Order and Deposit. Lead time is typical and should be verified by manufacturer. |
| Warranty: | To be verified |
| Eco-Feature(s) *as per manufacturer: | Water-saving vandal-resistant 0.5 gpm aerator |

## SPECIAL INSTRUCTIONS

MANUFACTURER

Kohler Co.

Anupa Maru (703) 371.4269 Anupa.Maru@Kohler.com

ALTERNATE MANUFACTURER 1

ALTERNATE MANUFACTURER 2

ALTERNATE MANUFACTURER 3

AREAS

Public Space

Pool (Splash) Restroom (w/c)

Public Restroom - Men's (w/c)

Public Restroom - Women's (w/c)

Issue Date: 28 JUL 2017

Revision Date:

| | |
|---|---|
| Item Name | Faucet |
| Description: | Goose-neck touchless deck-mount faucet without mixer; includes 30-year Hybrid Energy Cell; vandal-resistant aerator |
| Manufacturer: | Kohler |
| Product: | K-7518-CP (Electronic Faucet) |
| Dimensions: | 3" W x 12-1/8" H<br>6-3/16" spout reach |
| Flow Rate: | 0.5 gpm (1.9 lpm) |
| Drain Option: | K-7129-A-CP (grid drain with overflow) |
| Content: | Brass |
| Finish: | Polished Chrome |
| Quality Standards: | ASME A112.18.1/CSA B125.1 NSF 372<br>All applicable US Federal and State material regulations<br>DOE - Energy Policy Act 1992<br>ADA<br>ICC/ANSI A117.1<br>CSA B651<br>OBC |
| Lead Time: | Standard lead time is a minimum of 8 weeks from receipt of Purchase Order and Deposit. Lead time is typical and should be verified by manufacturer. |
| Warranty: | To be verified |
| Eco-Feature(s) *as per manufacturer: | Water-saving vandal-resistant 0.5 gpm aerator |

## SPECIAL INSTRUCTIONS

MANUFACTURER

Kohler Co.

Anupa Maru (703) 371.4269 Anupa.Maru@Kohler.com

ALTERNATE MANUFACTURER 1

ALTERNATE MANUFACTURER 2

ALTERNATE MANUFACTURER 3

AREAS

Public Space

Employee Toilet (w/c)

Issue Date: 28 JUL 2017

Revision Date: 29 JAN 2018

| | |
|---|---|
| Item Name | Faucet for mop sink |
| Description: | Manual faucet with vacuum breaker |
| Manufacturer: | FIAT |
| Product: | 830-AA |
| Dimensions: | Refer to cutsheet |
| Content: | Commercial red brass alloy casting-rough finish |
| Finish: | Chrome Plated |
| Quality Standards: | In the U.S.A., meets or exceeds requirements of ANSI-A112.18.1M-1979 for “Finished and Rough Brass Plumbing Fixture Fittings.” Chrome plating exceeding requirements of ANSI/ASTM B-456-71. In Canada, meets or exceeds the requirements of CSA standards B125 - “Plumbing Fittings,” B64.1.1 - “Vacuum Breakers - Atmosphere Type” and B64.0 - “General Requirements for Backflow Preventers and Vacuum Breakers,” and is approved under Product Class No. 6811 01 under Report #LM57412-1. Conforms to ASSE 1001. |
| Lead Time: | 2 weeks |
| Warranty: | Product be be warranted against defects in material and workmanship as it is owned by the original purchaser for a period of 1 year from the date of purchase. |
| Eco-Feature(s) *as per manufacturer: | Not applicable |

## SPECIAL INSTRUCTIONS

MANUFACTURER

FIAT (800) 387-0369

Customer Service / Sales (800) 387-0369 info@fiat.ca

ALTERNATE MANUFACTURER 1

Moen 1-800-289-6636

Dana Thompson dana.thompson@fbgpg.com

ALTERNATE MANUFACTURER 2

ALTERNATE MANUFACTURER 3

AREAS

Public Space

Janitor

Issue Date: 28 JUL 2017

Revision Date: 29 JAN 2018

| | |
|---|---|
| Item Name | Faucet for mop sink (Alternate) |
| Description: | Two-handle service sink faucet |
| Manufacturer: | Moen |
| Product: | 8230 |
| Dimensions: | Centers adjust from 7-5/8" to 8-3/8"<br>9-3/8" Projection from wall |
| Content: | Brass |
| Finish: | Rough Chrome |
| Quality Standards: | Third party certified by IAPMO and CSA to meet ASME A112.18.1M and all applicable specifications referenced therein<br>ADA for lever handles |
| Lead Time: | To be verified |
| Warranty: | Warranted 5 years against material or manufacturing defects |
| Eco-Feature(s) *as per manufacturer: | Not applicable |

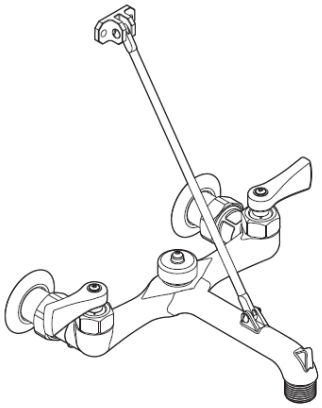

## SPECIAL INSTRUCTIONS

MANUFACTURER

Moen 1-800-289-6636

Dana Thompson 516.528.9064 dana.thompson@fbgpg.com

ALTERNATE MANUFACTURER 1

FIAT (800) 387-0369

Customer Service / Sales info@fiat.ca

ALTERNATE MANUFACTURER 2

ALTERNATE MANUFACTURER 3

AREAS

Public Space

Janitor

Issue Date: 28 JUL 2017

Revision Date: 29 JAN 2018

| | |
|---|---|
| Item Name | Faucet |
| Description: | Single control kitchen faucet with swivel spout and all metal handle |
| Manufacturer: | American Standard US |
| Product: | 4205.001 (Reliant+) |
| Dimensions: | 10" Spread<br>7-1/2" H |
| Content: | Cast brass body; metal handle |
| Flow Rate: | 2.2 gpm (8.3 lpm) |
| Finish: | 002 Polished Chrome |
| Quality Standards: | ANSI A117.1<br>ASME A112.18.1<br>CSA B 125<br>NSF 61/Section 9 & Annex G |
| Lead Time: | 2 weeks |
| Warranty: | For all industrial, commercial and business usage the warranty period is five years, from date of purchase and except for duration, all other aforementioned warranty terms apply. |
| Eco-Feature(s) *as per manufacturer: | Faucet contains 0.25% total lead content by weighted average. |

## SPECIAL INSTRUCTIONS

MANUFACTURER

American Standard US 1-800-442-1902

Alex Stackhouse 704-405-3043 alexs@repsouth.com

ALTERNATE MANUFACTURER 1

ALTERNATE MANUFACTURER 2

ALTERNATE MANUFACTURER 3

AREAS

Public Space

Break Room

Issue Date: 28 JUL 2017

Revision Date: 29 JAN 2018

| | |
|---|---|
| Item Name | Faucet |
| Description: | Faucet |
| Manufacturer: | E.L. Mustee & Sons |
| Product: | 93.600 |
| Dimensions: | 8" Spread<br>6" H |
| Content: | Brass Waterways |
| Finish: | Polished Chrome |
| Quality Standards: | Not Applicable |
| Lead Time: | To be verified |
| Warranty: | One year warranty from the date of sale to the consumer that our products will be free of defects in material and workmanship. |
| Eco-Feature(s) *as per manufacturer: | Not applicable |

## SPECIAL INSTRUCTIONS

MANUFACTURER

E.L. Mustee & Sons, Inc. (216) 267-3100

Marcus and Weimer, Inc. (440) 247-3570

ALTERNATE MANUFACTURER 1

ALTERNATE MANUFACTURER 2

ALTERNATE MANUFACTURER 3

AREAS

Public Space

Laundry

Issue Date: 28 JUL 2017

Revision Date:

| | |
|---|---|
| Item Name | Water Filler |
| Description: | Electronic Faucet |
| Manufacturer: | T & S Brass & Bronze Works, Inc. |
| Product: | CheckPoint single hole electronic wall mount gooseneck faucet |
| Dimensions: | 11" H x 4-1/8" D x 2-1/4" W |
| Content: | Brass body |
| Finish: | Polished chrome plated |
| Quality Standards: | ASME A112.18.1/CSA B125.1; NSF 61 - Section 9; NSF 372 (Low Lead Content); ANSI A117.1 (ADA); UL 1951 |
| Lead Time: | To be verified |
| Warranty: | Three Year (Limited) |

## SPECIAL INSTRUCTIONS

MANUFACTURER

T & S Brass & Bronze Works, Inc.

Alex Stackhouse 704-405-3043 alexs@repsouth.com

ALTERNATE MANUFACTURER 1

ALTERNATE MANUFACTURER 2

ALTERNATE MANUFACTURER 3

AREAS

Issue Date: 14 FEB 2019

Revision Date:

| | |
|---|---|
| Item Name | Faucet |
| Description: | Purist Wall Mount Sink Faucet Trim |
| Manufacturer: | Kohler |
| Product: | K-T11839-CP |
| Dimensions: | 9 1/8" L |
| Content: | Brass |
| Finish: | Polished Chrome |
| Quality Standards: | ASME A112.18.1/CSA B125.1 NSF/ANSI 372<br>All applicable US Federal and State material regulations<br>DOE<br>ADA<br>ICC/ANSI A117.1<br>CSA B651<br>OBC |
| Lead Time: | Standard lead time is a minimum of 8 weeks from receipt of Purchase Order and Deposit. Lead time is typical and should be verified by manufacturer. |
| Warranty: | 1 Year Limited Warranty |
| Eco-Feature(s) *as per manufacturer: | N/A |

## SPECIAL INSTRUCTIONS

MANUFACTURER

Kohler Co.

Anupa Maru (703) 371.4269 Anupa.Maru@Kohler.com

ALTERNATE MANUFACTURER 1

ALTERNATE MANUFACTURER 2

ALTERNATE MANUFACTURER 3

AREAS

Public Space

Pool (Splash) Restroom (w/c)

Issue Date: 14 FEB 2019

Revision Date:

| | |
|---|---|
| Item Name | Aerator Kit |
| Description: | Kit - Aerator 1.5 GPM - Laminar PCA |
| Manufacturer: | Kohler |
| Product: | K-1053333 |
| Dimensions: | N/A |
| Content: | N/A |
| Finish: | N/A |
| Quality Standards: | N/A |
| Lead Time: | 3-10 Business days |
| Warranty: | One Year Limited Warranty |
| Eco-Feature(s) *as per manufacturer: | N/A |
| Notes: | Goes with PL-208 |

## SPECIAL INSTRUCTIONS

MANUFACTURER

Kohler Co.

Anupa Maru (703) 371.4269 Anupa.Maru@Kohler.com

ALTERNATE MANUFACTURER 1

ALTERNATE MANUFACTURER 2

ALTERNATE MANUFACTURER 3

AREAS

Public Space

Pool (Splash) Restroom (w/c)

Issue Date: 28 JUL 2017

Revision Date: 29 JAN 2018

| | |
|---|---|
| Item Name | Water Closet |
| Description: | High efficiency top spud floor mounted toilet |
| Manufacturer: | Sloan |
| Product: | ST-2029-A |
| Dimensions: | 15-7/8" W x 25-1/8" or 28-1/8" L x 17" H |
| Flow Rate: | 1.1 gpf (4.2 lpf) / 1.6 gpf (6.0 lpf) when used with specified dual flushometer |
| Content: | Vitreous Chine |
| Finish: | White |
| Quality Standards: | Meets ADA guidelines and ANSI A117.1 requirements when installed accordingly IAPMO certified to meet or exceed ASME A112.19.2 standards |
| Lead Time: | To be verified |
| Warranty: | 3 year warranty to be free from defects or material and workmanship from the date of purchase. |
| Eco-Feature(s) *as per manufacturer: | HET (High Efficiency Toilet) |

## SPECIAL INSTRUCTIONS

MANUFACTURER

Sloan Inc.

Customer Service/Sales 847-671-4300 customer.service@sloanvalve.com

ALTERNATE MANUFACTURER 1

ALTERNATE MANUFACTURER 2

ALTERNATE MANUFACTURER 3

AREAS

Public Space

- Pool (Splash) Restroom (w/c)
- Employee Toilet (w/c)
- Public Restroom - Men's (w/c)
- Public Restroom - Women's (w/c)

Issue Date: 28 JUL 2017

Revision Date:

| | |
|---|---|
| Item Name | Water Closet Seat |
| Description: | Elongated open front toilet seat with check hinge; no cover |
| Manufacturer: | Kohler |
| Product: | K-4731-O (Stronghold) |
| Dimensions: | 14-1/4" W x 18-15/16" L |
| Content: | Solid polypropylene plastic |
| Finish: | White |
| Quality Standards: | ADA, ANSI Z124.5 |
| Lead Time: | Standard lead time is a minimum of 8 weeks from receipt of Purchase Order and Deposit. Lead time is typical and should be verified by manufacturer. |
| Warranty: | To be verfied |
| Eco-Feature(s) *as per manufacturer: | Not applicable |

## SPECIAL INSTRUCTIONS

MANUFACTURER

Kohler Co.

Anupa Maru (703) 371.4269 Anupa.Maru@Kohler.com

ALTERNATE MANUFACTURER 1

ALTERNATE MANUFACTURER 2

ALTERNATE MANUFACTURER 3

AREAS

Public Space

- Pool (Splash) Restroom (w/c)
- Employee Toilet (w/c)
- Public Restroom - Men's (w/c)
- Public Restroom - Women's (w/c)

Issue Date: 28 JUL 2017

Revision Date: 29 JAN 2018

| | |
|---|---|
| Item Name | Flushometer (Alternate) |
| Description: | Battery powered exposed style closet flush valve |
| Manufacturer: | Moen |
| Product: | 8310 |
| Dimensions: | Refer to cutsheet |
| Flow Rate: | 1.6 gpf |
| Content: | Brass |
| Finish: | Chrome plated |
| Quality Standards: | Third party certified by IAPMO and CSA to meet ASME A112.19.2M and all applicable requirements referenced therein and complies with requirements of ASSE 1037 ADA |
| Lead Time: | To be verified |
| Warranty: | 5 years against material or manufacturing defects |
| Eco-Feature(s) *as per manufacturer: | Not applicable |

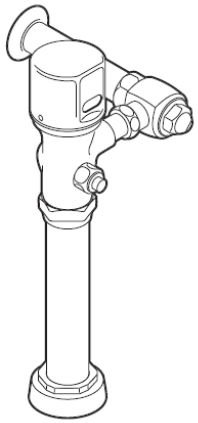

## SPECIAL INSTRUCTIONS

### MANUFACTURER

Moen 1-800-289-6636

Dana Thompson 516.528.9064 dana.thompson@fbgpg.com

### ALTERNATE MANUFACTURER 1

Sloan Inc.

Customer Service/Sales customer.service@sloanvalve.com

### ALTERNATE MANUFACTURER 2

### ALTERNATE MANUFACTURER 3

### AREAS

Public Space

- Pool (Splash) Restroom (w/c)
- Employee Toilet (w/c)
- Public Restroom - Men's (w/c)
- Public Restroom - Women's (w/c)

Issue Date: 28 JUL 2017

Revision Date: 29 JAN 2018

| | |
|---|---|
| Item Name | Flushometer |
| Description: | Exposed battery powered, sensor activated Sloan ECOS Electronic Dual Flush Model Water Closet Flushometer for floor mounted or wall hung top spud bowls |
| Manufacturer: | Sloan |
| Product: | ECOS 8113-1.6/1.1 |
| Dimensions: | Refer to cutsheet |
| Flow Rate: | Full flush (large button - 1.6 gpf (6.0 lpf)<br>Reduced flush (small button - 1.1 gpf (4.2 lpf) |
| Content: | Stainless Steel |
| Finish: | Chrome |
| Quality Standards: | ADA Compliant Sloan ECOS® Electronic Battery Powered<br>Infrared Sensor for automatic “No Hands” operation<br>Valve Body, Tailpiece and Control Stop shall be in conformance with ASTM Alloy Classification for Semi-Red Brass.<br>Valve shall be in compliance with the applicable sections of ASSE 1037.<br>Installation conforms to ADA requirements. |
| Lead Time: | To be verified |
| Warranty: | 3 year warranty to be free from defects or material and workmanship from the date of purchase. |
| Eco-Feature(s) *as per manufacturer: | Low water consumption flush flow rate (reduces water volume by up to 30% when a reduced flush occurs) |

## SPECIAL INSTRUCTIONS

### MANUFACTURER

Sloan Inc.

Customer Service/Sales 847-671-4300 customer.service@sloanvalve.com

### ALTERNATE MANUFACTURER 1

Moen 1-800-289-6636

Dana Thompson dana.thompson@fbgpg.com

### ALTERNATE MANUFACTURER 2

### ALTERNATE MANUFACTURER 3

### AREAS

Public Space

- Pool (Splash) Restroom (w/c)
- Employee Toilet (w/c)
- Public Restroom - Men's (w/c)
- Public Restroom - Women's (w/c)

Issue Date: 28 JUL 2017

Revision Date:

| | |
|---|---|
| Item Name | Waterless Urinal |
| Description: | Waterless wall-mounted urinal; Includes removable strainer, sealing liquid sample, cleaner sample, outlet spud and hangers |
| Manufacturer: | Kohler |
| Product: | K-4917-O |
| Dimensions: | 11" W x 14-3/4" D x 23-3/4" H |
| Content: | Vitreous China |
| Finish: | White |
| Quality Standards: | ASME A112.19.2/CSA B45.1<br>ASME A112.19.19<br>ADA<br>ICC/ANSI A117.1 |
| Lead Time: | Standard lead time is a minimum of 8 weeks from receipt of Purchase Order and Deposit. Lead time is typical and should be verified by manufacturer. |
| Warranty: | One-Year Limited Warranty |
| Eco-Feature(s) *as per manufacturer: | Saves up to 40,000 gallons of water per fixture per year and significantly reduces sewage and maintenance costs<br>This product can help a building earn Water Efficiency points in the LEED Green Building Rating System™ |

## SPECIAL INSTRUCTIONS

MANUFACTURER

Kohler Co.

Anupa Maru (703) 371.4269 Anupa.Maru@Kohler.com

ALTERNATE MANUFACTURER 1

ALTERNATE MANUFACTURER 2

ALTERNATE MANUFACTURER 3

AREAS

Public Space

Public Restroom - Men's (w/c)

Issue Date: 14 FEB 2019

Revision Date:

| | |
|---|---|
| Item Name | Water Closet |
| Description: | Kingston Wall Mounted Toilet |
| Manufacturer: | Kohler |
| Product: | K-4325-L-0 |
| Dimensions: | 26.5"L x 16.5"W x 13.25"H |
| Flow Rate: | 1.28 gpf or 1.6 gpf depending on flushometer specified |
| Content: | Vitreous China |
| Finish: | White |
| Quality Standards: | Meets ADA guidelines and ANSI A117.1 requirements when installed accordingly IAPMO certified to meet or exceed ASME A112.19.2 standards |
| Lead Time: | TBD |
| Warranty: | 1 Year Limited Warranty |
| Eco-Feature(s) *as per manufacturer: | High Efficiency Toilet (HET) |

## SPECIAL INSTRUCTIONS

MANUFACTURER

Kohler 703-371-4269

Anupa Maru anupa.maru@kohler.com

ALTERNATE MANUFACTURER 1

ALTERNATE MANUFACTURER 2

ALTERNATE MANUFACTURER 3

AREAS

Public Space

Pool (Splash) Restroom (w/c)

Issue Date: 14 FEB 2019

Revision Date:

| | |
|---|---|
| Item Name | Flushometer |
| Description: | Tripoint Touchless DC 1.28 GBF Toilet Flushometer |
| Manufacturer: | Kohler |
| Product: | K-10956-SV-CP |
| Dimensions: | Refer to Cutsheet |
| Content: | Brass |
| Finish: | Polished Chrome |
| Quality Standards: | Comply with the guidelines of ADA and us UL listed |
| Lead Time: | Standard lead time is a minimum of 8 weeks from receipt of Purchase Order and Deposit. Lead time is typical and should be verified by manufacturer. |
| Warranty: | 1 Year Limited Warranty |
| Eco-Feature(s) *as per manufacturer: | TBD |

## SPECIAL INSTRUCTIONS

MANUFACTURER

Kohler Co.

Anupa Maru (703) 371.4269 Anupa.Maru@Kohler.com

ALTERNATE MANUFACTURER 1

ALTERNATE MANUFACTURER 2

ALTERNATE MANUFACTURER 3

AREAS

Public Space

Pool (Splash) Restroom (w/c)

Issue Date: 28 JUL 2017

Revision Date: 29 JAN 2018

| | |
|---|---|
| Item Name | Accessible Handshower Assembly |
| Description: | Handshower kit<br>*This is a multi-part spec. Items do not come together in one kit. All item numbers must be referenced to order the full hand shower kit. Refer to following pages for detailed specs and dimensional information. |
| Manufacturer: | Kohler |
| Product: | Shower Column: K-45904<br>Handshower: K-978<br>Hose: K-9514 |
| Dimensions: | Refer to cutsheets |
| Content: | Metal |
| Finish: | Polished chrome |
| Quality Standards: | Shower Column: ASME A112.18.1/CSA B125.1, ADA, ICC/ANSI A117.1, CSA B651<br>Handshower: ASME A112.18.1/CSA B125.1, all applicable US Federal and State material regulations, DOE-Energy Policy Act 1992, EPA Water Sense, ADA, ICC/ANSI A117.1, CSA B651, OBC<br>Hose: Not applicable |
| Lead Time: | Standard lead time is a minimum of 8 weeks from receipt of Purchase Order and Deposit. Lead time is typical and should be verified by manufacturer. |
| Warranty: | Shower Column: Liftetime limited warranty<br>Handshower: Lifetime limited warranty<br>Hose: Lifetime limited warranty |
| Eco-Feature(s) *as per manufacturer: | EPA Water Sense |
| Flow Rate: | 1.75 gpm (6.6 L) per minute maximum flow rate |

## SPECIAL INSTRUCTIONS

MANUFACTURER

Kohler 703-371-4269

Anupa Maru anupa.maru@kohler.com

ALTERNATE MANUFACTURER 1

Moen 1-800-289-6636

Dana Thompson dana.thompson@fbgpg.com

ALTERNATE MANUFACTURER 2

ALTERNATE MANUFACTURER 3

AREAS

Issue Date: 28 JUL 2017

Revision Date: 29 JAN 2018

| | |
|---|---|
| Item Name | Accessible Handshower Assembly |
| Description: | Single function handshower with slide bar |
| Manufacturer: | Moen |
| Product: | 3887EP<br>*A725 Wall El required |
| Dimensions: | 30" slide bar with push button height selection<br>69" double interlock spiral hose (metal) |
| Content: | Metal |
| Finish: | Polished chrome |
| Quality Standards: | Designed and manufactured to comply with the applicable requirements of ASME A112.18.1/CSA B-125.1, ASSE 1014 and all applicable specifications referenced therein |
| Lead Time: | To be verified with manufacturer |
| Warranty: | Limited lifetime warranty against material or manufacturing defects |
| Eco-Feature(s) *as per manufacturer: | Not applicable |
| Flow Rate: | EP suffix model designed to deliver 1.75 gpm (6.6 L/min) max |

## SPECIAL INSTRUCTIONS

MANUFACTURER

Moen 1-800-289-6636

Dana Thompson 516.528.9064 dana.thompson@fbgpg.com

ALTERNATE MANUFACTURER 1

Kohler 703-371-4269

Anupa Maru anupa.maru@kohler.com

ALTERNATE MANUFACTURER 2

ALTERNATE MANUFACTURER 3

AREAS

Issue Date: 28 JUL 2017

Revision Date: 14 FEB 2019

| | |
|---|---|
| Item Name | Shower Assembly |
| Description: | Awaken B110 1.75 GPM Premium Slidebar Kit |
| Manufacturer: | Kohler |
| Product: | K-99899-G-CP |
| Dimensions: | 2 15/16" W x 41 5/8"H |
| Flow Rate: | 1.75 gpm (6.6 lpm) |
| Content: | Metal |
| Finish: | Polished Chrome |
| Quality Standards: | ASME A112.18.1/CSA B125.1<br>DOE - Energy Policy Act 1992<br>EPA WaterSense®<br>California Energy Commission (CEC)<br>ADA<br>ICC/ANSI A117.1<br>OBC |
| Lead Time: | Standard lead time is a minimum of 8 weeks from receipt of Purchase Order and Deposit. Lead time is typical and should be verified by manufacturer. |
| Warranty: | Lifetime Limited Warranty |
| Eco-Feature(s) *as per manufacturer: | WaterSense®-labeled 1.75-gpm showerheads use up to 30 percent less water than standard 2.5-gpm showerheads while still meeting strict performance guidelines.<br>This product can help a building earn Water Efficiency points in the LEED® Green Building Rating System.<br>This product meets water savings requirements for California Energy Commission (CEC), CALGreen, and Colorado SB 14-103. |

## SPECIAL INSTRUCTIONS

MANUFACTURER

Kohler Co.

Anupa Maru (703) 371.4269 Anupa.Maru@Kohler.com

ALTERNATE MANUFACTURER 1

ALTERNATE MANUFACTURER 2

ALTERNATE MANUFACTURER 3

AREAS

Public Space

Pool Shower

Issue Date: 28 JUL 2017

Revision Date: 29 JAN 2018

| | |
|---|---|
| Item Name | Shower Assembly (Alternate) |
| Description: | Showerhead alternate |
| Manufacturer: | Moen |
| Product: | Showerhead: T2192EP (Align single function showerhead)<br>*See also BF-410-A (Align shower trim kit; includes shower head) |
| Dimensions: | 3-5/8" Diameter spray head |
| Content: | Metal |
| Finish: | Polished Chrome |
| Quality Standards: | Not applicable |
| Lead Time: | To be verified |
| Warranty: | Lifetime Limited Warranty |
| Eco-Feature(s) *as per manufacturer: | Not applicable |
| Flow Rate: | 1.75 gpm (6.6 L/min) at 80 psi |

## SPECIAL INSTRUCTIONS

MANUFACTURER

Moen 1-800-289-6636

Dana Thompson 516.528.9064 dana.thompson@fbgpg.com

ALTERNATE MANUFACTURER 1

Kohler 703-371-4269

Anupa Maru anupa.maru@kohler.com

ALTERNATE MANUFACTURER 2

ALTERNATE MANUFACTURER 3

AREAS

Public Space

Pool Shower

Issue Date: 28 JUL 2017

Revision Date:

| | |
|---|---|
| Item Name | Shower Arm |
| Description: | 45 degree shower arm and wall-mount flange |
| Manufacturer: | Kohler |
| Product: | K-7397-CP |
| Dimensions: | 2-1/4" Flange diameter<br>7-1/2" L overall<br>1/2" (14 NPT thread both ends) |
| Content: | Metal |
| Finish: | Polished Chrome |
| Quality Standards: | Not applicable |
| Lead Time: | Standard lead time is a minimum of 8 weeks from receipt of Purchase Order and Deposit. Lead time is typical and should be verified by the manufacturer. |
| Warranty: | Lifetime Limited Warranty |
| Eco-Feature(s) *as per manufacturer: | Not applicable |

## SPECIAL INSTRUCTIONS

MANUFACTURER

Kohler Co.

Anupa Maru (703) 371.4269 Anupa.Maru@Kohler.com

ALTERNATE MANUFACTURER 1

ALTERNATE MANUFACTURER 2

ALTERNATE MANUFACTURER 3

AREAS

Public Space

Pool Shower

Issue Date: 14 FEB 2019

Revision Date:

| | |
|---|---|
| Item Name | Shower Drain |
| Description: | Clearflo Tile-in Shower Drain |
| Manufacturer: | Kohler |
| Product: | K-9136-CP |
| Dimensions: | 4 9/16"W x 4 1/8"H |
| Content: | Brass and PVC |
| Finish: | Polished Chrome |
| Quality Standards: | ASME A112.18.2/CSA B125.2 |
| Lead Time: | Standard lead time is a minimum of 8 weeks from receipt of Purchase Order and Deposit. Lead time is typical and should be verified by manufacturer. |
| Warranty: | Lifetime Limited Warranty |
| Eco-Feature(s) *as per manufacturer: | N/A |

## SPECIAL INSTRUCTIONS

MANUFACTURER

Kohler Co.

Anupa Maru (703) 371.4269 Anupa.Maru@Kohler.com

ALTERNATE MANUFACTURER 1

ALTERNATE MANUFACTURER 2

ALTERNATE MANUFACTURER 3

AREAS

Public Space

Pool Shower

Issue Date: 28 JUL 2017

Revision Date: 07 FEB 2019

| | |
|---|---|
| Item Name | Temp Balancing Valve |
| Description: | Valve Body & Cartridge Kit |
| Manufacturer: | Kohler |
| Product: | K-8304-KS (RITE-TEMP) |
| Dimensions: | Refer to cutsheet |
| Content: | Brass valve body |
| Finish: | Not applicable |
| Quality Standards: | ASME A112.18.1/CSA B125.1<br>ASSE 1016/ASME A112.1016/CSA B125.16 |
| Lead Time: | Standard lead time is a minimum of 8 weeks from receipt of Purchase Order and Deposit. Lead time is typical and should be verified by the manufacturer. |
| Warranty: | Lifetime Limited Warranty |
| Eco-Feature(s) *as per manufacturer: | Not applicable |
| Note: | Requires valve trim (sold separately) |

## SPECIAL INSTRUCTIONS

MANUFACTURER

Kohler Co.

Anupa Maru (703) 371.4269 Anupa.Maru@Kohler.com

ALTERNATE MANUFACTURER 1

Moen 1-800-289-6636

Dana Thompson dana.thompson@fbgpg.com

ALTERNATE MANUFACTURER 2

ALTERNATE MANUFACTURER 3

AREAS

Public Space

Pool Shower

Issue Date: 28 JUL 2017

Revision Date: 29 JAN 2018

| | |
|---|---|
| Item Name | Temp Balancing Valve (Alternate) |
| Description: | Pressure balancing valve with 1/4 turn stops |
| Manufacturer: | Moen |
| Product: | 62370 (Posi-Temp Valve) |
| Dimensions: | Refer to cutsheet |
| Content: | Brass |
| Finish: | Not applicable |
| Quality Standards: | Third party certified to meet CSA B125.1, ASME A112.18.1, ASSE 1016, and all applicable requirements referenced therein Moen's Posi-Temp® and Moentrol® valves with graphite composite spools combined with Moen's Eco-performance showerheads meet the performance requirements of pressure and temperature variation of ASSE1016 when tested as low as 1.5 gpm |
| Lead Time: | To be verified |
| Warranty: | Lifetime limited warranty against leaks, drips and finish defects to the original consumer purchaser<br>5-year warranty if used in commercial installations |
| Eco-Feature(s) *as per manufacturer: | Not applicable |

## SPECIAL INSTRUCTIONS

MANUFACTURER

Moen 1-800-289-6636

Dana Thompson 516.528.9064 dana.thompson@fbgpg.com

ALTERNATE MANUFACTURER 1

Kohler 703-371-4269

Anupa Maru anupa.maru@kohler.com

ALTERNATE MANUFACTURER 2

ALTERNATE MANUFACTURER 3

AREAS

Public Space

Pool Shower

# PL-804-KO

Revision 4

Plumbing

Issue Date: 28 JUL 2017

Revision Date: 14 FEB 2019

| | |
|---|---|
| Item Name | Temp Balancing Valve Trim |
| Description: | Rite-Temp Valve Trim with Lever Handle |
| Manufacturer: | Kohler |
| Product: | Composed K-TS73115-4-CP |
| Dimensions: | 6 3/8" Dia. x 4 1/8" D |
| Content: | Premium metal construction |
| Finish: | Polished Chrome |
| Quality Standards: | ASME A112.18.1/CSA B125.1<br>ADA<br>ICC/ANSI A117.1<br>CSA B651<br>OBC |
| Lead Time: | Standard lead time is a minimum of 8 weeks from receipt of Purchase Order and Deposit. Lead time is typical and should be verified by manufacturer. |
| Warranty: | Lifetime Limited Warranty |
| Eco-Feature(s) *as per manufacturer: | N/A |

## SPECIAL INSTRUCTIONS

MANUFACTURER

Kohler Co.

Anupa Maru (703) 371.4269 Anupa.Maru@Kohler.com

ALTERNATE MANUFACTURER 1

Moen 1-800-289-6636

Dana Thompson dana.thompson@fbgpg.com

ALTERNATE MANUFACTURER 2

ALTERNATE MANUFACTURER 3

AREAS

Public Space

Pool Shower

Issue Date: 28 JUL 2017

Revision Date: 29 JAN 2018

| | |
|---|---|
| Item Name | Temp Balancing Valve Trim (Alternate) |
| Description: | Single handle shower trim and arm; shower head |
| Manufacturer: | Moen |
| Product: | T2192EP (Align Shower Trim Kit; includes shower head)<br>See also PL-403-MO |
| Dimensions: | Refer to cutsheet |
| Content: | Metal |
| Flow Rate: | Showerhead is limited to 2.5 gpm (9.5 L/min) at 80 psi<br>EP suffix models are limited to 1.75 gpm (6.6 L/min) at 80 psi |
| Finish: | Polished Chrome |
| Quality Standards: | Third party certified to meet ASME A112.18.1/CSA B125.1 and all applicable requirements referenced therein<br>EP suffix models are third party certified to WaterSense®<br>ADA for lever handle |
| Lead Time: | To be verified |
| Warranty: | 5 year limited warranty when used in a commercial installation |
| Eco-Feature(s) *as per manufacturer: | Not applicable |

## SPECIAL INSTRUCTIONS

MANUFACTURER

Moen 1-800-289-6636

Dana Thompson 516.528.9064 dana.thompson@fbgpg.com

ALTERNATE MANUFACTURER 1

Kohler 703-371-4269

Anupa Maru anupa.maru@kohler.com

ALTERNATE MANUFACTURER 2

ALTERNATE MANUFACTURER 3

AREAS

Public Space

Pool Shower

Issue Date: 14 FEB 2019

Revision Date:

| | |
|---|---|
| Item Name | Faucet Valve and Sensor Kit |
| Description: | Touchless Round Hybrid Valve and Sensor Kit |
| Manufacturer: | Kohler |
| Product: | K-11830-NA |
| Dimensions: | 9"W x 3 1/8"L x 10"H |
| Content: | Brass |
| Finish: | N/A |
| Quality Standards: | ASME A112.18.1/CSA B125.1 NSF/ANSI 372<br>ADA<br>ICC/ANSI A117.1<br>CSA B651<br>OBC |
| Lead Time: | Standard lead time is a minimum of 8 weeks from receipt of Purchase Order and Deposit. Lead time is typical and should be verified by manufacturer. |
| Warranty: | Lifetime Limited Warranty |
| Eco-Feature(s) *as per manufacturer: | |

## SPECIAL INSTRUCTIONS

MANUFACTURER

Kohler Co.

Anupa Maru (703) 371.4269 Anupa.Maru@Kohler.com

ALTERNATE MANUFACTURER 1

ALTERNATE MANUFACTURER 2

ALTERNATE MANUFACTURER 3

AREAS

Public Space

Pool (Splash) Restroom (w/c)

Issue Date: 14 FEB 2019

Revision Date:

| | |
|---|---|
| Item Name | Shower Elbow with Check Valve |
| Description: | Awaken Wall-mount Supply Elbow with Check Valve |
| Manufacturer: | Kohler |
| Product: | K-98351-CP |
| Dimensions: | 2"W x 1 3/4"L x 2 1/4"H |
| Content: | Metal |
| Finish: | Polished Chrome |
| Quality Standards: | ASME A112.18.1/CSA B125.1<br>ASSE 1014 |
| Lead Time: | Standard lead time is a minimum of 8 weeks from receipt of Purchase Order and Deposit. Lead time is typical and should be verified by manufacturer. |
| Warranty: | Lifetime Limited Warranty |
| Eco-Feature(s) *as per manufacturer: | N/A |
| Notes: | Includes supply adapter kit |

## SPECIAL INSTRUCTIONS

MANUFACTURER

Kohler Co.

Anupa Maru (703) 371.4269 Anupa.Maru@Kohler.com

ALTERNATE MANUFACTURER 1

ALTERNATE MANUFACTURER 2

ALTERNATE MANUFACTURER 3

AREAS

Public Space

Pool Shower

Issue Date: 14 FEB 2019

Revision Date:

| | |
|---|---|
| Item Name | Recessed Wall Mounted Water Bottle Filing Station |
| Description: | Water Bottle Filling Station |
| Manufacturer: | Park Warehouse LLC |
| Product: | 648wf305 |
| Dimensions: | 24" H x 5-3/4"D x 18"W |
| Content: | Metal |
| Color: | Black |
| Quality Standards: | N/A |
| Lead Time: | Lead times on products vary, from 1-2 days to up to 3-4 weeks. Most products ship in less than 3 weeks and most standard colors of product are on a quickship program of shipping in less than 5 days. |
| Warranty: | 1 Year |
| Eco-Feature(s) *as per manufacturer: | N/A |

## SPECIAL INSTRUCTIONS

MANUFACTURER

| | |
|---|---|
| Park Warehouse LLC | 888-321-5334 |
| Deanna Grande | 888-321-5334 x508 |

ALTERNATE MANUFACTURER 1

ALTERNATE MANUFACTURER 2

ALTERNATE MANUFACTURER 3

AREAS

Public Space

Fitness Center (Re:Charge)

Issue Date: 14 FEB 2019

Revision Date:

| | |
|---|---|
| Item Name | Wall Mounted Beverage Cup Dispenser |
| Description: | Pull-Type Beverage Cup |
| Manufacturer: | Webstaurant Store |
| Product: | C3200P |
| Dimensions: | Rim dia: 2 7/32"-3 3/16"<br>Tube Length: 23 1/2" |
| Content: | Metal |
| Finish: | Stainless Steel |
| Quality Standards: | N/A |
| Lead Time: | 2-5 Days |
| Warranty: | 1 Year from date of shipment. |
| Eco-Feature(s) *as per manufacturer: | N/A |
| Notes: | Included brackets allow for either wall or dispenser stand mounting |

## SPECIAL INSTRUCTIONS

MANUFACTURER

Webrestaurant Store 717-392-7472

ALTERNATE MANUFACTURER 1

ALTERNATE MANUFACTURER 2

ALTERNATE MANUFACTURER 3

AREAS

Public Space

Fitness Center (Re:Charge)

# Plumbing

Cutsheets

KOHLER®

PL-102
Revision Date:

# Verticyl®
## Under-mount Bathroom Sink
## K-2883

### Features
- Vitreous china.
- Under-mount.
- Round basin with contemporary design.
- With overflow.
- No faucet holes; requires wall- or counter-mount faucet.
- 13-3/4" (349 mm) diameter

### Recommended Accessories
K-8998 P-Trap

### Components
Additional included component/s: 1193643 Basin Clamps.

**ADA**

### Codes/Standards
ASME A112.19.2/CSA B45.1
ADA
ICC/ANSI A117.1

### KOHLER® One-Year Limited Warranty
See website for detailed warranty information.

### Available Color/Finishes
*Color tiles intended for reference only.*

| Color | Code | Description |
|---|---|---|
| | 0 | White |
| | 96 | Biscuit |
| | 47 | Almond |
| | NY | Dune |
| | 95 | Ice™ Grey |
| | G9 | Sandbar |
| | 33 | Mexican Sand™ |
| | K4 | Cashmere |
| | 58 | Thunder™ Grey |
| | 7 | Black Black™ |

PL-102

Revision Date:

# Verticyl®

## Under-mount Bathroom Sink

## K-2883

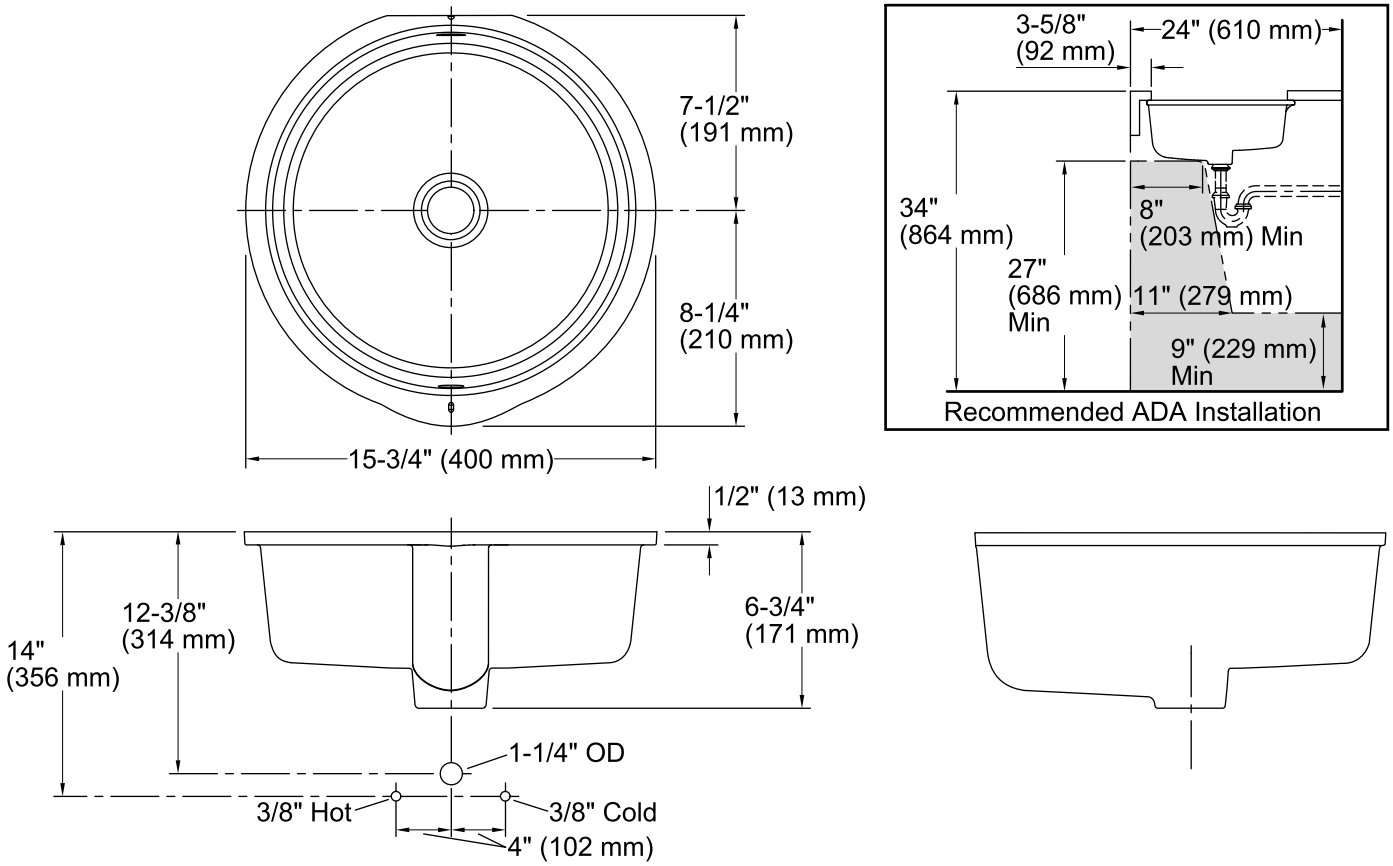


### Technical Information

All product dimensions are nominal.

| | |
|---|---|
| Bowl configuration: | Single |
| Installation: | Under-mount |
| Bowl area (Only) | Diameter: 13-3/4" (349 mm)<br>Water depth: 3-1/8" (79 mm) |
| Drain hole: | 1-3/4" (44 mm) |
| Template: | 1109224-7, required, not included |

### Notes

Install this product according to the installation instructions.

NOTICE: Countertop manufacturer or cutter must use the current product template available at www.kohler.com, or by calling 1-800-4KOHLER. Kohler Co. is not responsible for cutout errors when the incorrect cutout template is used.

ADA compliant when installed to the specific requirements of these regulations.

KOHLER®

PL-103
Revision Date:

# Purist® Wading Pool®

Bathroom Sink

**K-2314**

## Features

- Square, shallow basin with 1-3/4-inch depth.
- No faucet holes; requires wall-mount faucet.
- Coordinates with other products in the Purist collection.
- Optional porcelain hand basins in White porcelain and Natural porcelain

## Material

- Fireclay

## Installation

- Wall-mount

## Recommended Accessories

K-7129 Drain
K-7605-P Angle Supply with Stop (pair)
K-9018 P-Trap
K-9583 Bathroom Sink Bracket Kit

**ADA** | **CSA B651** | **OBC**

## Codes/Standards

ASME A112.19.2/CSA B45.1
All applicable US Federal and State material regulations
ADA
ICC/ANSI A117.1
CSA B651
OBC

## KOHLER® One-Year Limited Warranty

See website for detailed warranty information.

## Available Color/Finishes

*Color tiles intended for reference only.*

| Color | Code | Description |
|---|---|---|
| | 0 | White |
| | 96 | Biscuit |
| | 47 | Almond |

PL-103

Revision Date:

# Purist® Wading Pool®

Bathroom Sink

**K-2314**

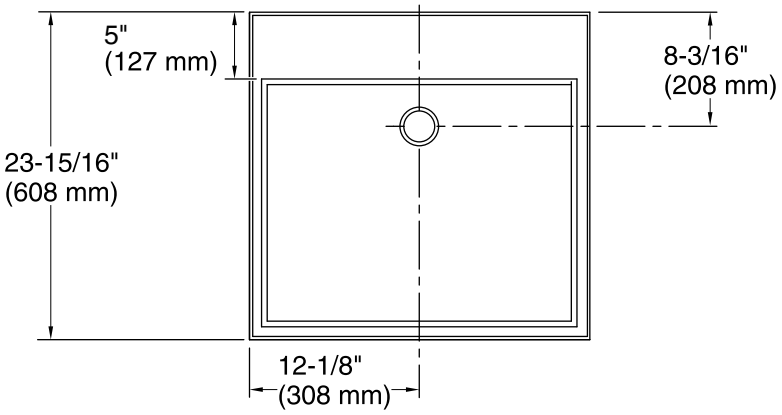


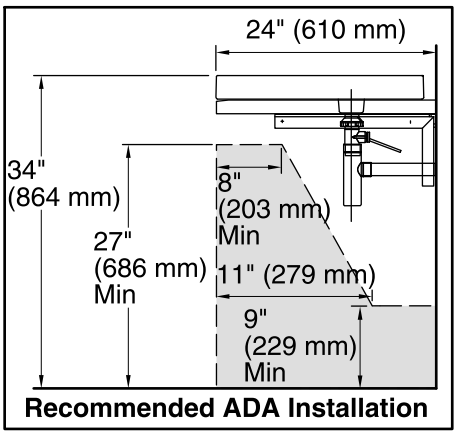


Recommended ADA Installation

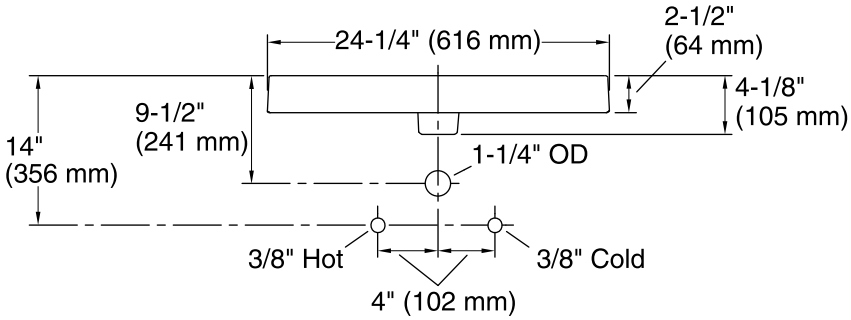


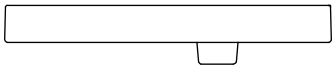

## Technical Information

All product dimensions are nominal.

| | |
|---|---|
| Installation: | Drop-in, Wall-mount |
| Bowl area (Only): | Length: 22" (559 mm)<br>Width: 17-1/2" (445 mm)<br>Water depth: 1-3/4" (44 mm) |
| Template: | 1014137-7, required, included |

## Notes

Install this product according to the installation instructions.

Product does not have an overflow.

NOTICE: Countertop manufacturer or cutter must use the cut-out template provided with the product, or a current one provided by Kohler Co. (call 1-800-4-KOHLER). Kohler Co. is not responsible for cutout errors when the incorrect cut-out template is used.

ADA, OBC, CSA B651 compliant when installed to the specific requirements of these regulations.

PL-104

Revision Date:

# Soho®

Wall-Mount Bathroom Sink

**K-2084**

## Features

- Single center hole.
- With overflow.
- 20" (508 mm) x 18" (457 mm)

## Material

- Vitreous china.

## Installation

- Wall-mount
- Drilled for concealed arm carrier.

## Recommended Accessories

K-8998 P-Trap

## Components

Additional included component/s: Hanger (2 Required).

**ADA** | **CSA B651** | **OBC**

## Codes/Standards

ASME A112.19.2/CSA B45.1
All applicable US Federal and State material regulations
ADA
ICC/ANSI A117.1
CSA B651
OBC

## KOHLER® One-Year Limited Warranty

See website for detailed warranty information.

## Available Color/Finishes

*Color tiles intended for reference only.*

| Color | Code | Description |
|---|---|---|
| | 0 | White |
| | 96 | Biscuit |
| | 47 | Almond |
| | 7 | Black Black™ |

KOHLER®

PL-104
Revision Date:

# Soho®
## Wall-Mount Bathroom Sink
## K-2084

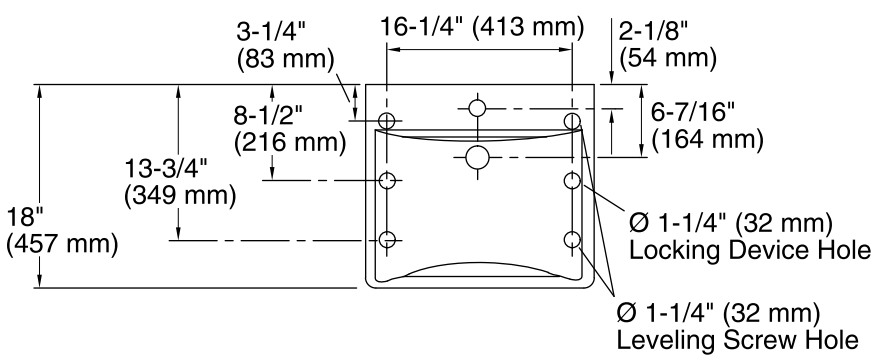


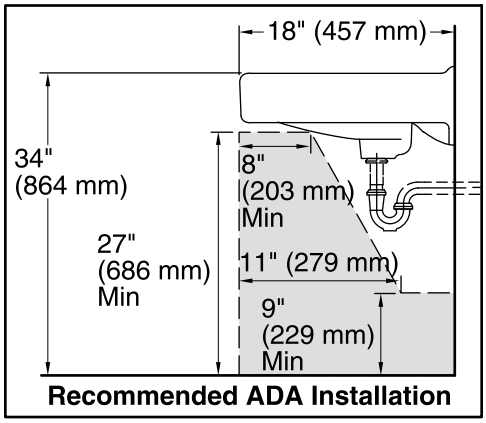

Recommended ADA Installation

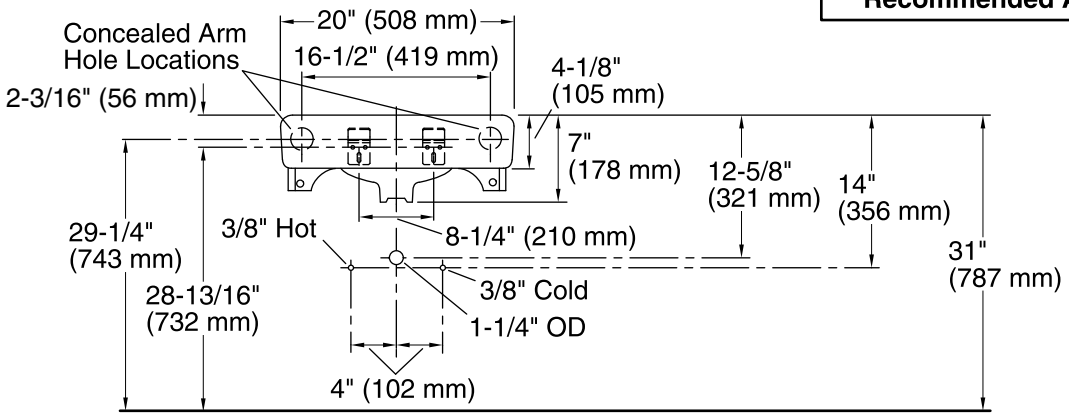

Standard Installation

## Technical Information

All product dimensions are nominal.

| | |
|---|---|
| Bowl configuration: | Single |
| Installation: | Wall-mount |
| Bowl area (Only) | Length: 18" (457 mm)<br>Width: 13" (330 mm)<br>With overflow: Yes<br>Water depth: 4-7/8" (124 mm) |
| Bowl area | With overflow: Yes |
| Number of deck holes: | 1 |
| Faucet hole(s): | 1-3/8" (35 mm) |
| Drain hole: | 1-3/4" (44 mm) |

## Notes

Install this product according to the installation instructions.

ADA, OBC, CSA B651 compliant when installed to the specific requirements of these regulations.

# MOLDED-STONE® MOP SERVICE BASIN

PL-105
Revision Date:

# MSB 2424
# MSB 3624

***Molded-Stone® Mop Service Basin***

## NOTES

## OPTIONS

- *Service Faucet (830-AA): Chrome plated with vacuum breaker, integral stops, adjustable wall brace, pail hook and ¾" hose thread on spout.*
- *Hose and Hose Bracket (832-AA)*
- *Mop Hanger (889-CC)*
- *Alternate Strainer (1453-BB) - For residential use (EFS-3624 and EFS-2424)*
- *3" Quick Drain Connector (QDC-3XH): Neoprene connecting gasket suitable for attaching extra heavy cast iron soil pipe and Schedule 40 steel pipe to the drain body. Neoprene connecting gasket (QDC-3SN) suitable for attaching hubless cast iron pipe (no hub, nominal O.D. of 3.31") and service weight cast iron soil pipe (nominal O.D. of 3.38") to the drain body.*
- *Silicone Sealant (833-AA)*
- *Vinyl Bumperguard (E-77-AA)*
- *Stainless Steel Bumperguard (E-88-AA)*
- *Stainles Steel Wall Guard (MSG2424, MSG2828, MG3232, MSG3636, and MSG3624)*

## FEATURES

- ***MSB 2424***

  *The MSB 2424 shall have overall outside dimensions of 24" x 24" x 10". The molding shall be done in matched metal dies under heat and pressure resulting in a one-piece homogeneous product. The unit shall have 10" high walls with not less than 1" wide.*

  *The stainless steel drain body is designed to provide for a caulk connection or QDC-3 joint to a 3" drain pipe. A combination dome strainer and lint basket made from stainless steel shall be included with factory installed stainless steel drain body for caulked joint to accept a 3" pipe.*

- ***MSB 3624***

  *The MSB 3624 shall have overall outside dimensions of 36" x 24" x 10". The molding shall be done in matched metal dies under heat and pressure resulting in a one-piece homogeneous product. The unit shall have 10" high walls with not less than 1" wide shoulders and an integrally molded shelf 10 9/16" wide where indicated.*

  *The stainless steel drain body is designed to provide for a caulk connection or QDC-3 joint to a 3" drain pipe. A combination dome strainer and lint basket made from stainless steel shall be included with factory installed stainless steel drain body for caulked joint to accept a 3" pipe.*

FIAT PRODUCTS®
A CRANE PLUMBING COMP ANY

CR/PL© 04/03 Printed in U.S.A.

# MOLDED-STONE® MOP SERVICE BASIN

PL-105
Revision Date:

# MSB 2424
# MSB 3624

*Molded-Stone® Mop Service Basin*

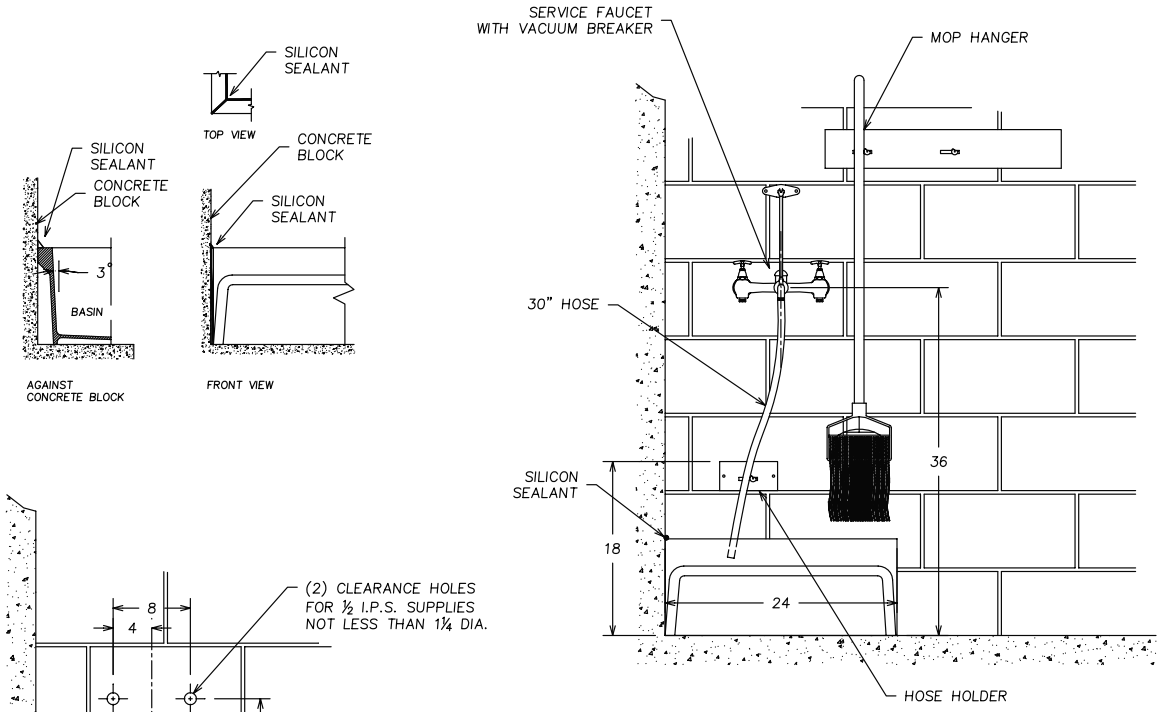


| MODEL NO. | A | B | C | D | E |
|---|---|---|---|---|---|
| MSB–2424 | 24 3/16 | 24 3/16 | 12 | 12 | 10 |
| MSB–3624 | 36 3/16 | 24 3/16 | 18 | 12 | 10 |

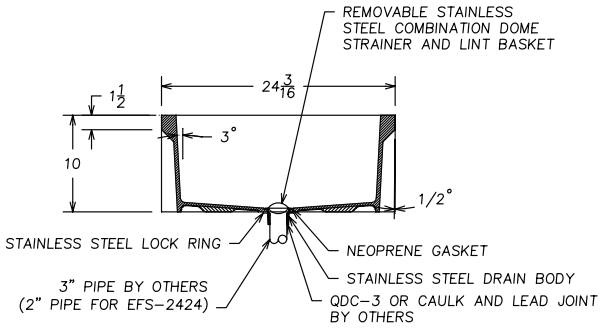


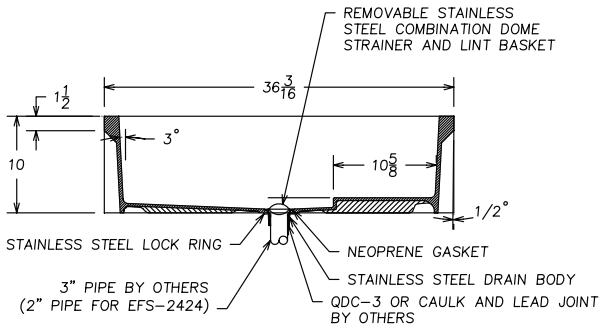


FIAT PRODUCTS®
A CRANE PLUMBING COMP ANY

**IMPORTANT:** Roughing-in dimensions may vary ½" and are subject to change or cancellation without prior notice.

CR/PL© 04/03 Printed in U.S.A

ELKAY®
SPECIFICATIONS

# Elkay Lustertone Stainless Steel 19-1/2" x 22" x 4" Single Bowl Top Mount ADA Sink

**Model(s) LRAD202240**

PL-106
Revision Date:

## PRODUCT SPECIFICATIONS

Elkay Lustertone Stainless Steel 19-1/2" x 22" x 4", Single Bowl Top Mount ADA Sink. Sink is manufactured from 18 gauge 304 Stainless Steel with a Lustertone finish, Rear Center drain placement, and Bottom only pads.

| | |
|---|---|
| **Installation Type:** | Top Mount |
| **Material:** | 304 Stainless Steel |
| **Finish:** | Lustertone |
| **Gauge:** | 18 |
| **Sound Deadening:** | Bottom only pads |
| **Number of Bowls:** | 1 |
| **Sink Dimensions:** | 19-1/2" x 22" x 4" |
| **Bowl 1 Dimensions:** | 16" x 16" x 3-7/8" |
| **Drain Size:** | 3-1/2" (89mm) |
| **Drain Location:** | Rear Center |
| **Minimum Cabinet Size:** | 24" |
| **Mounting Hardware:** | Part # 64090012 included for countertops up to 3/4" (19mm) thick |
| **Cutout Template #:** | 1000001263 |

*Template is available for download at elkay.com*

**Cutout Dimensions for Top Mount Installation:**
18-7/8" x 21-3/8" (479mm x 543mm) with 1-1/2" (38mm) corner radius

This sink is compliant to ADA and ANSI/ICC A117.1 accessibility requirements when installed according to the requirements outlined in these standards.

**Hole Drilling Configurations:**

1-1/2" (38mm) Diameter Faucet Holes on 4" (102mm) Centers

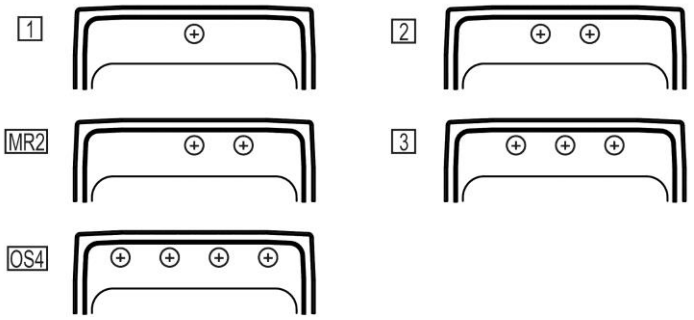

AMERICAN PRIDE. A LIFETIME TRADITION.
Like your family, the Elkay family has values and traditions that endure. For almost a century, Elkay has been a family-owned and operated company, providing thousands of jobs that support our families and communities.

Sinks are listed by IAPMO® as meeting the applicable requirements of the Uniform Plumbing Code®, International Plumbing Code®, and National Plumbing Code of Canada.

**Product Compliance:** ADA & ICC A117.1
ASME A112.19.3/CSA B45.4
BUY AMERICAN ACT

Clean and Care Manual (PDF)
Installation Instructions (PDF)
Limited Lifetime Warranty (PDF)

**Similar models are available with:** Quick-Clip Mounting System, additional ADA depths, CuVerro antimicrobial copper

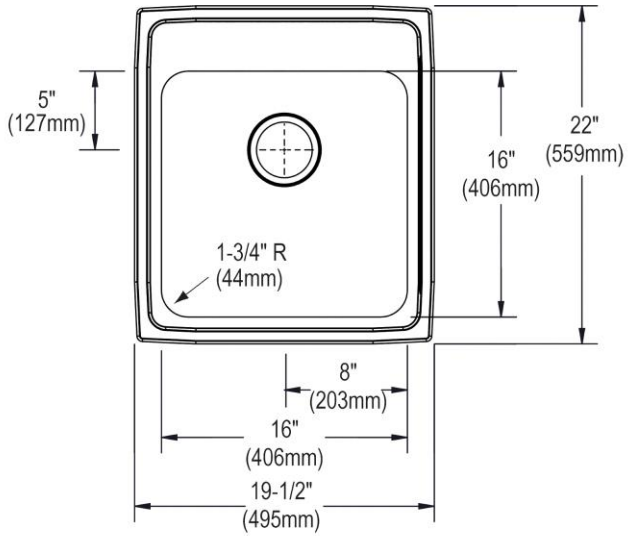


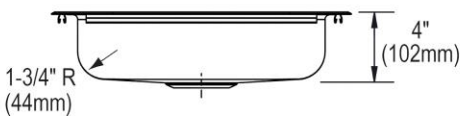


PART:_____QTY: _____
PROJECT:_____
CONTACT:_____
DATE:_____
NOTES:_____
APPROVAL:_____

*In keeping with our policy of continuing product improvement, Elkay reserves the right to change product specifications without notice. Please visit elkay.com for the most current version of Elkay product specification sheets. This specification describes an Elkay product with design, quality, and functional benefits to the user. When making a comparison of other producers' offerings, be certain these features are not overlooked.*


© 2018

# Elkay Lustertone Stainless Steel 19-1/2" x 22" x 4" Single Bowl Top Mount ADA Sink

**Model(s) LRAD202240**

PL-106

Revision Date:

**Installation Profile:**

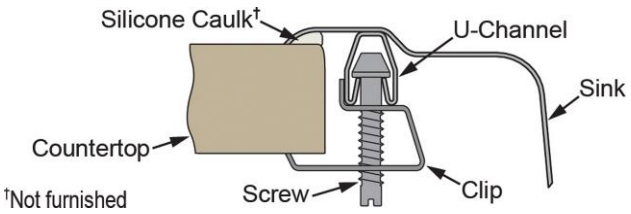


## OPTIONAL ACCESSORIES

| | |
|---|---|
| **Bottom Grid:** | LKWOBG1616SS |
| **Cutting Board:** | CB1713, CBS1316 |
| **Drain:** | LK99 |
| **Faucet:** | LKGT1041, LKGT2041 |
| **Hardware:** | LK364, LK463 |
| **Rinsing Basket:** | LKWRB1316SS, LKWERBSS |
| **Sinkmate:** | LKSMHSL |
| **Soap Dispenser:** | LKGT1054 |

*In keeping with our policy of continuing product improvement, Elkay reserves the right to change product specifications without notice. Please visit elkay.com for the most current version of Elkay product specification sheets. This specification describes an Elkay product with design, quality, and functional benefits to the user. When making a comparison of other producers' offerings, be certain these features are not overlooked.*

MUSTEE
*Preferred by the "Pros"*

PL-107
Revision Date:

# 27F and 27W UTILATWIN® Laundry/Utility Tubs — Premier

***SEE PAGE 2 FOR A LIST OF***

## Design features:

- **High strength, one piece molded construction**
- **Produced with Mustee's proprietary structural thermoplastic resins and innovative cellular molding process creating extreme strength & durability**
- **Includes Twin-Drain Waste connector which joins drain assemblies to assure rapid and uniform waste water discharge…includes washers, slip nuts and stoppers.**
- **Divider wall between tubs is recessed one inch, permitting water to overflow from one tub to other, prevents water spilling onto floor.**
- **Large, self-draining back shelf with retainer curb that prohibits water run-off except into tub.**
- **19 Gallon capacity per tub, extra deep 13" tubs with smooth surfaces**
- **Connects to standard 1½" P or S trap**
- **Accommodates single or dual-handle faucets. 4" or 8" centers**
- **Floor model includes heavy gauge steel legs with adjustable levelers**
- **Wall model includes wall mounting bracket, side supports and mounting hardware for securing tub to concrete or stud wall**
- **Mold and mildew-resistant components**
- **Easy to assemble and install**
- **Color-fast white finish**

## Code Accepted:

UTILATUB® and UTILATWIN® Laundry/Utility Tubs meet or exceed performance requirements as listed:

- **International Association of Plumbing and Mechanical Officials (IAPMO)® Listed**
- **Warnock Hersey® (Canada) Listed—CSA test standards: Laundry Tray - #B45.0 and #B45.5; Drain - #B125**
- **American National Standards Institute (ANSI)—Specification Z 124-2011**

## Specifications

| Colors & Models: | Model | Mounting | H x W x D | UPC |
|---|---|---|---|---|
| White | 27F | Floor | 34" x 40" x 24" | 6 71031 00057 6 |
| White | 27W | Wall | 34" x 40" x 24" | 6 71031 00058 3 |

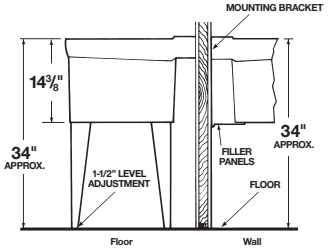


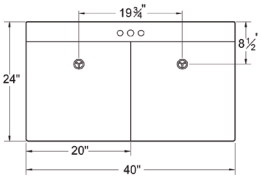


**General:** Furnish and install as shown on plans, UTILATWIN® Twin Laundry/Utility Tub model____(27F, 27W), as manufactured by E.L. Mustee & Sons, Inc. Tub shall be one-piece molded construction using structural thermoplastics with matched metal molds under extreme heat and pressure. Tub to include integrally molded drains, twin drain waste coupling, recessed divider wall between tubs and twin drain assembly for connection to standard 1-1/2" P or S-trap, stoppers and wall mounting hardware or heavy gauge steel legs with built-in levelers. 19 gallon capacity per tub, each tub 13" deep. Shall meet ANSI Z 124-2011. Color: White. Weight: 27F 40 lbs.; 27W 40 lbs.

MUSTEE

**E.L. Mustee & Sons, Inc. • 5431 West 164th Street • Brook Park, OH 44142 • Phone: 216.267.3100 • Fax: 216.267.9997**
**E-mail: info@mustee.com. • Web: www.mustee.com • Proudly made in the USA**

Notice: Our continuous commitment to product improvement may result in changes to product specifications without notice.
Patents pending. Made and Printed in U.S.A.

# 27F and 27W UTILATWIN® Laundry/Utility Tub Accessories

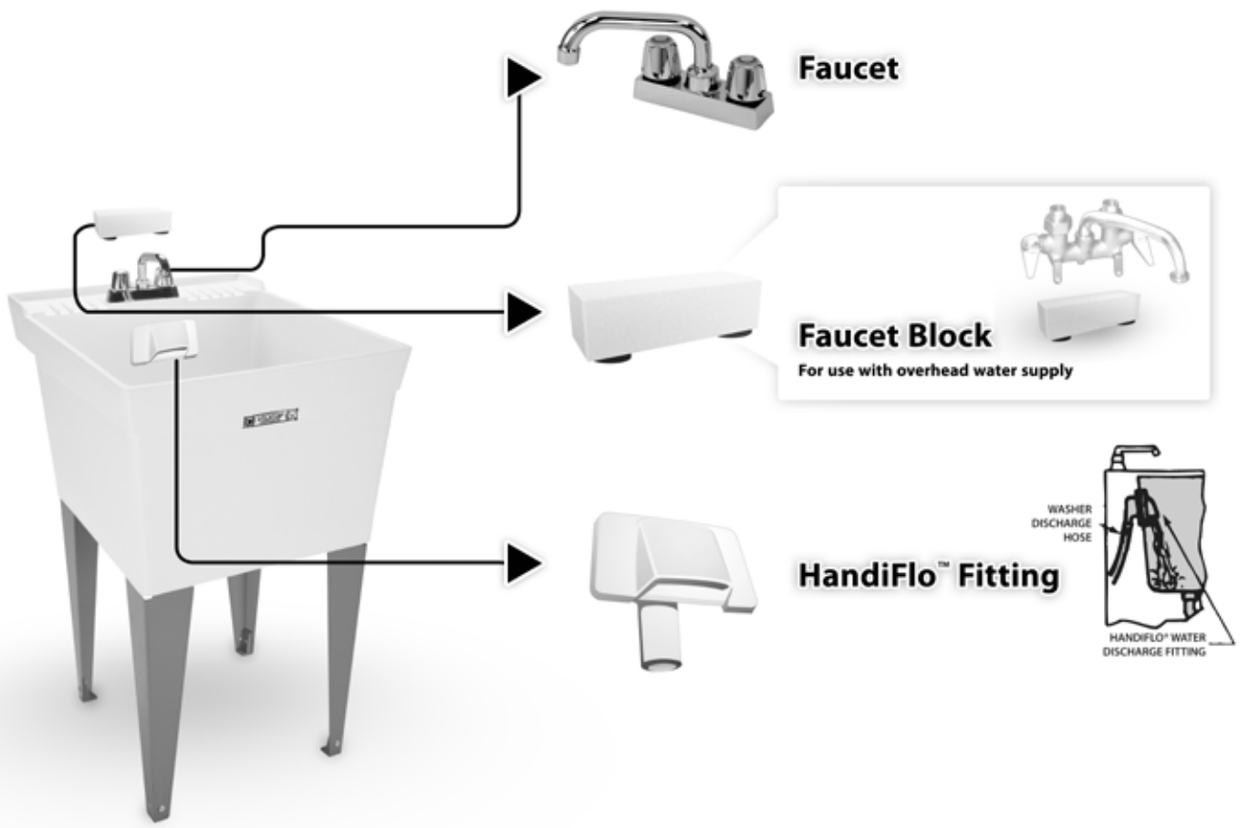


## Faucet

| Model No. | UPC |
|---|---|
| 93.600 | 6 71031 00232 7 |

Chrome finish, 4" center set brass faucet. 7" swing spout with aerator, level handles, replaceable seats and stems. Areator or hose end.

## Faucet Block

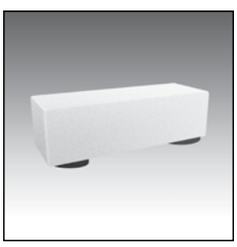

| Model No. | UPC |
|---|---|
| 20.600 | 6 71031 00031 6 |

Used when water supply lines are above the tub. Mounts to tub shelf when using a clamp-on faucet.

## HandiFlo™ Fitting

| Model No. | UPC |
|---|---|
| 94.700 | 6 71031 00287 7 |

Dispenses water from washing machine discharge hose into laundry tub. Eliminates draping washer machine hose over back/side wall of laundry tub and conceals discharge hose. Mounts to back or side wall of laundry tub, includes mounting hardware.

MUSTEE
E.L. Mustee & Sons, Inc. • 5431 West 164th Street • Brook Park, OH 44142 • Phone: 216.267.3100 • Fax: 216.267.9997
E-mail: info@mustee.com. • Web: www.mustee.com • Proudly made in the USA

Notice: Our continuous commitment to product improvement may result in changes to product specifications without notice.
Patents pending. Made and Printed in U.S.A.

PL-108

Revision Date:

KOHLER. Faucets

Drain

**K-7129**

## Features

- Solid brass construction ensures durability and reliability.
- KOHLER finishes resist corrosion and tarnishing, exceeding industry durability standards over two times.
- Without overflow.
- For use in non-overflow applications.

## Codes/Standards

ASME A112.18.2/CSA B125.2

## KOHLER® One-Year Limited Warranty

See website for detailed warranty information.

## Available Color/Finishes

*Color tiles intended for reference only.*

| Color | Code | Description |
|---|---|---|
| | CP | Polished Chrome |
| | SN | Vibrant® Polished Nickel |
| | AF | Vibrant® French Gold |
| | PB | Vibrant® Polished Brass |
| | G | Brushed Chrome |
| | BN | Vibrant® Brushed Nickel |
| | VS | Vibrant® Stainless |
| | BV | Vibrant® Brushed Bronze |
| | 2BZ | Oil-Rubbed Bronze |
| | BL | Matte Black |
| | TT | Titanium |
| | VNT | Vintage Nickel |

PL-108

Revision Date:

KOHLER. Faucets

Drain
**K-7129**

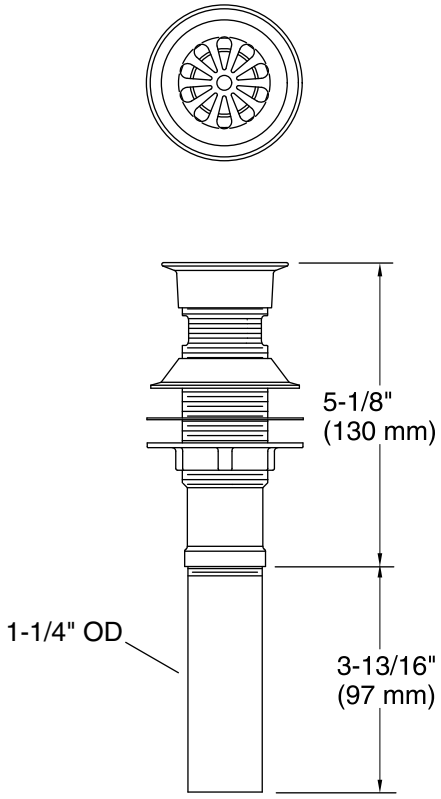


## Technical Information
All product dimensions are nominal.

## Notes
Install this product according to the installation guide.

PL-109

Revision Date:

KOHLER. Faucets

# P-Trap
# K-9018

## Features
- Adjustable rotation on outlet extension tube.
- Slip-fit inlet.
- Cleanout plug.
- Flange

## Material
- Brass

## Installation
- Intended for console table installations.

## Codes/Standards
ASME A112.18.2/CSA B125.2

## KOHLER® One-Year Limited Warranty
See website for detailed warranty information.

## Available Color/Finishes
*Color tiles intended for reference only.*

| Color | Code | Description |
|---|---|---|
| | CP | Polished Chrome |
| | SN | Vibrant® Polished Nickel |
| | AF | Vibrant® French Gold |
| | PB | Vibrant® Polished Brass |
| | BGD | Vibrant® Moderne Brushed Gold |
| | BN | Vibrant® Brushed Nickel |
| | BV | Vibrant® Brushed Bronze |
| | 2BZ | Oil-Rubbed Bronze |
| | BL | Matte Black |
| | 0 | White |
| | 7 | Black Black™ |

PL-109

Revision Date:

KOHLER. Faucets

P-Trap
**K-9018**

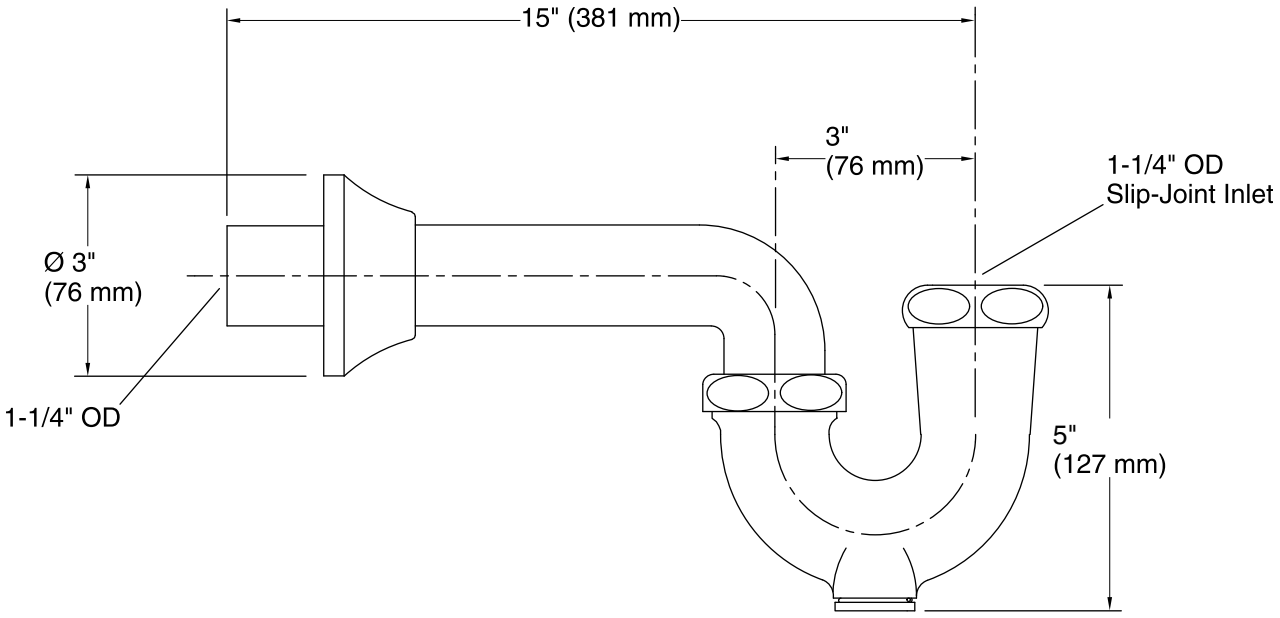


## Technical Information

All product dimensions are nominal.

## Notes

Install this product according to the installation guide.

# LAV GUARD®2

FAST FIT UNDERSINK PIPING COVERS

All New E-Z Series

PL-110

Revision Date:

*ADA-compliant undersink protection*

TRUEBRO® IPS CORPORATION

# Submittal Sheet

## General Description:

LAV GUARD® 2 E-Z Series waste and supply piping covers satisfy ADA compliance requirements. Built-in *E-Z Grip* internal fasteners and internal, *E-Z Tear-To-Fit* trimming feature allow for fast installation without tools. *Series #100 E-Z* kits are designed to fit on all tubular and cast brass P-trap assemblies. *Series #400* kits are the "original" LAV GUARD design and fit schedule 40 ABS and PVC P-trap assemblies — regardless of their geometry or rotational offset. Valve cover completely encloses angle valve and supply tube for both handled and keyed type water stops.

| | |
|---|---|
| Material | Molded vinyl |
| Nominal Wall | 1/8" constant |
| Durometer | 70 - 80 - Shore A |
| UV Protection | Will not fade or discolor |
| Durability | Virtually indestructible |
| Trimming (E-Z Series) | Internal, *E-Z Tear-To-Fit* trim feature |
| Fasteners (E-Z Series) | Internal *E-Z Grip* fasteners (reusable) |
| Color | China white |
| Paintability | Apply Latex paint |
| Burning Characteristics ASTM D-635 | Self extinguished 0 sec (ATB) 0 mm (AEB) |
| Bacteria/Fungus Resistance | ASTM G21 and G22/ Result: 0 growth |
| Maintenance | Use common detergents |

Manufactured under one or more of the following U.S. or Canadian patents. Other patents pending.

5,303,730 5,360,031 5,524,669 5,564,463 5,678,598 5,699,828 5,915,412 5,915,413 5,901,739 5,960,820 2,075,324 2,119,427 2,136,027 2,158,083


TRUEBRO® IPS CORPORATION

IPS Corporation, 202 Industrial Park Lane, Collierville, TN 38017
(901) 853-5001 (800) 340-5969 FAX: (901) 853-5008
e-mail: info@truebro.com Internet: http://www.truebro.com

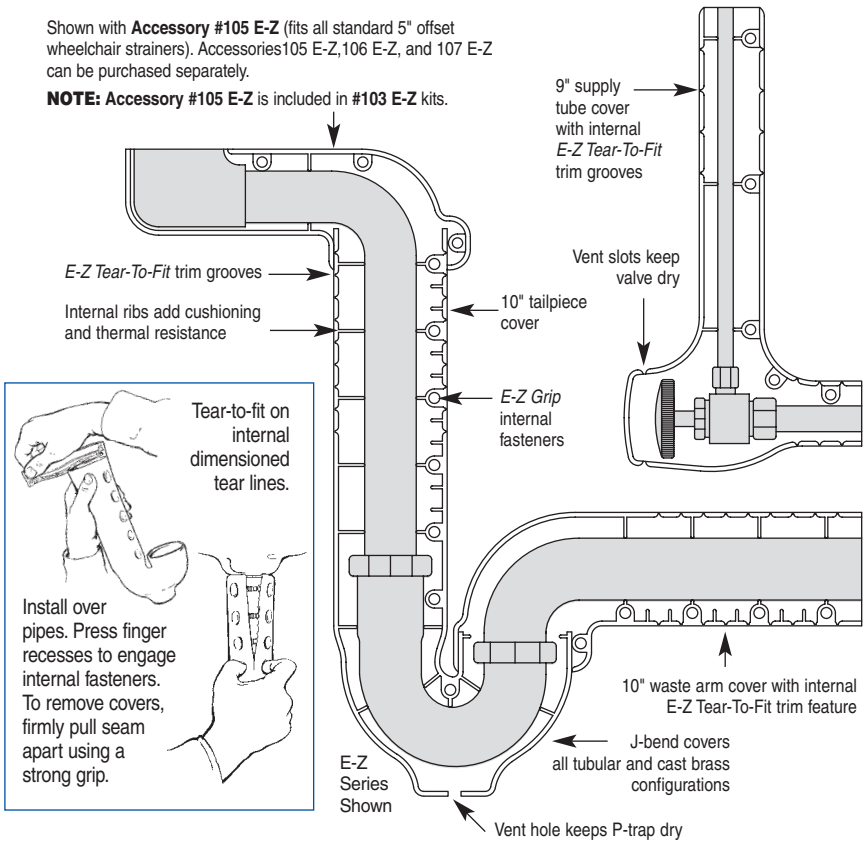


***#100 E-Z Series*** *(shown above right) for tubular and cast brass P-trap assemblies.*
***#400W* Series*** *(original design) for schedule 40 P-trap assemblies.*

☐ **Model #99 E-Z**
One angle valve and supply cover

☐ **Model #100 E-Z**
One P-trap cover

☐ **Model #400W***
One P-trap cover

☐ **Model #101 E-Z**
One P-trap cover, one angle valve cover

☐ **Model #401W***
One P-trap cover, one angle valve cover

☐ **Model #102 E-Z**
One P-trap cover, two angle valves and covers

☐ **Model #402W***
One P-trap cover, two angle valves and covers

☐ **Model #103 E-Z**
One P-trap cover, two angle valves and supply covers, one 5" offset tailpiece wheelchair strainer cover

☐ **Accessory #105 E-Z**
One 5" offset tailpiece wheelchair strainer assembly

*All #400W series items are the "original" LAV GUARD® design and construction. Specifications may change without notice.

☐ **Accessory #105-K**
Kohler 6" offset

☐ **Accessory #106 E-Z**
One basket strainer cover and offset waste cover (adjustable to 18")

☐ **Accessory #107 E-Z**
Two basket strainer covers and center or end outlet waste cover (adjustable)

☐ **Accessory #Ex99 E-Z**
One 14" extension for water supply

☐ **Accessory #Ex100 E-Z**
One 14" extension for drain waste arm or tailpiece

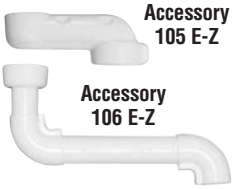


**Accessory 107 E-Z**
(Configuration Options Shown)

Job/Location _____

Designer _____

TRUEBRO reserves the right to make product and material changes at any time without notice. 2/07

PL-111

Revision Date:

KOHLER®

# Bathroom Sink Bracket Kit

**K-9583**

## Features

- Durable stainless-steel construction.
- For use with K-2313 and K-2334 Purist wet surface sinks and K-2314 and K-2335 Purist wading pool sinks.

## Codes/Standards

None Applicable

## KOHLER® One-Year Limited Warranty

See website for detailed warranty information.

PL-111

Revision Date:

KOHLER®

# Bathroom Sink Bracket Kit

**K-9583**

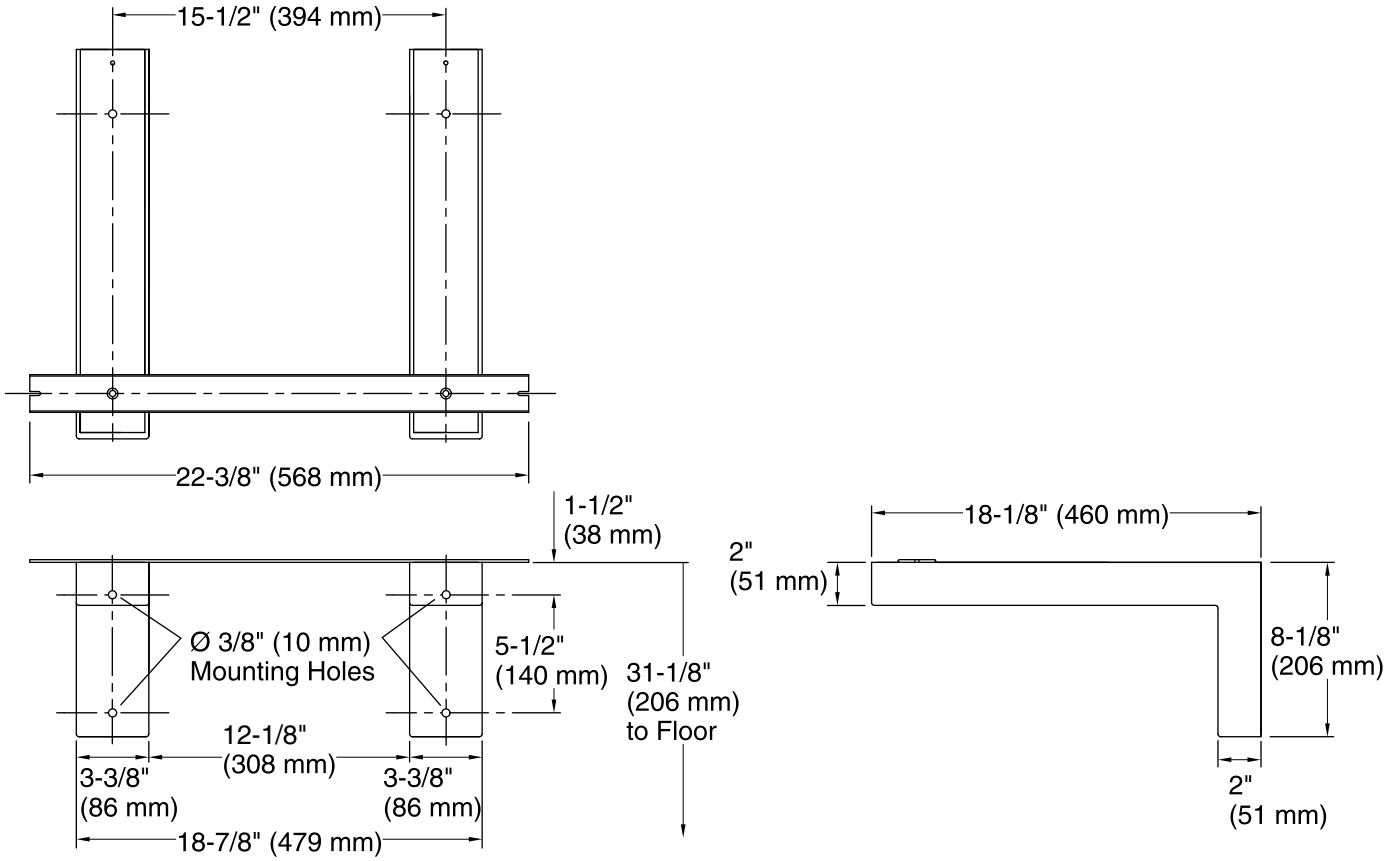


## Technical Information

All product dimensions are nominal.

KOHLER. Faucets

PL-202
Revision Date:

# Gooseneck Insight™
DM Faucet
**K-7518**

## Features
- 0.5 gal/min (1.9 l/min) flow rate.
- Factory set 30 second max. continual run cycle.
- Vandal-resistant aerator.
- 24" (610 mm) flexible supply hoses for easy installation.
- 6-3/16" (157 mm) spout reach.
- Less temperature mixer.
- Less drain.

## Material
- Brass construction.

## Technology
- Includes 30-year Hybrid Energy Cell.
- Electronic Insight™ Sensor Technology for accurate and consistent activation.

## Installation
- Single-hole mounting.
- Above-counter valve for easy installation and maintenance.

**ADA** | **CSA B651** | **OBC**

## Codes/Standards
ASME A112.18.1/CSA B125.1
NSF 372
All applicable US Federal and State material regulations
DOE - Energy Policy Act 1992
ADA
ICC/ANSI A117.1
CSA B651
OBC

See website for detailed warranty information.

## Available Color/Finishes
*Color tiles intended for reference only.*

| Color | Code | Description |
|---|---|---|
| | CP | Polished Chrome |

KOHLER. Faucets

PL-202
Revision Date:

# Gooseneck Insight™

DM Faucet

**K-7518**

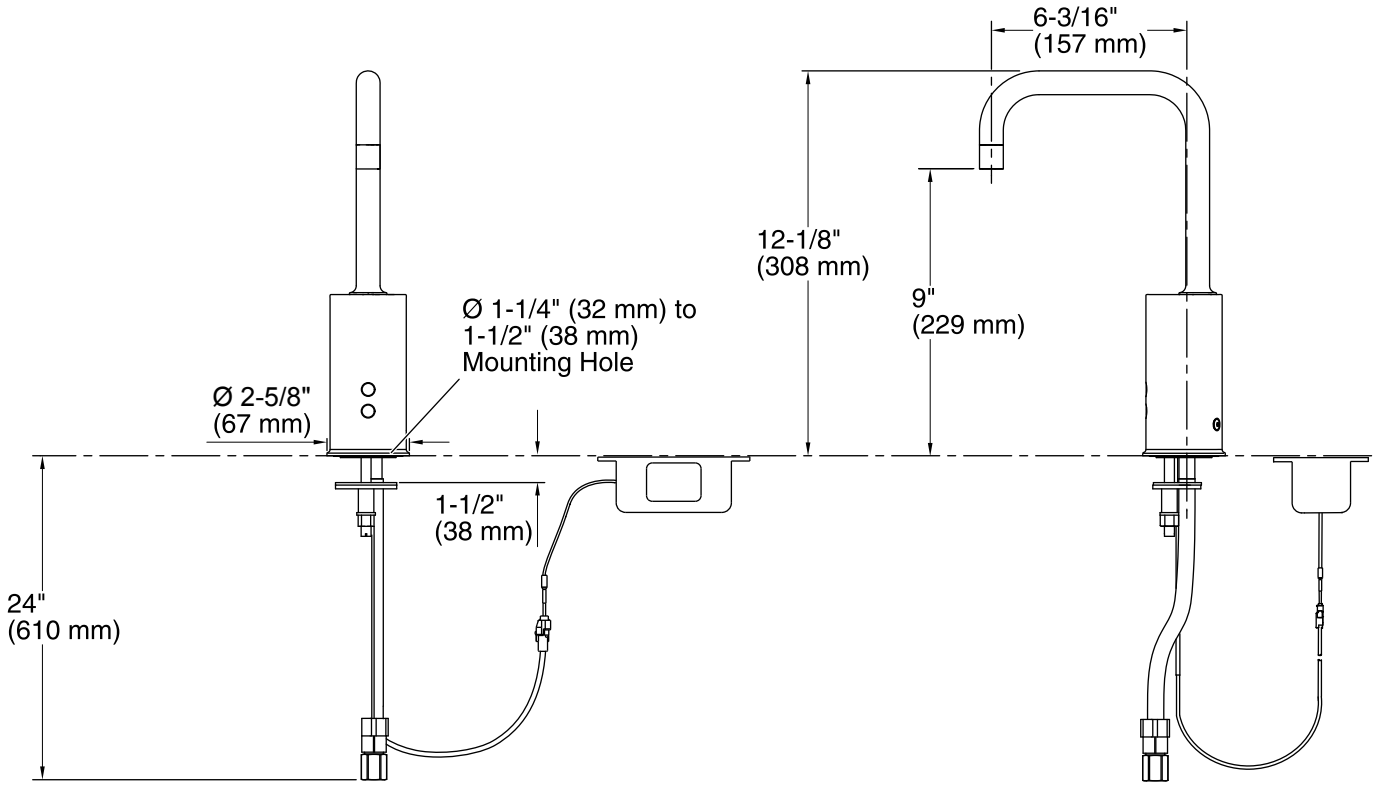


## Technical Information

All product dimensions are nominal.

| | |
|---|---|
| Valve body: | Machined Brass |

### Faucet:

| | |
|---|---|
| Flow rate: | 0.5 gal/min (1.9 l/min) |
| Power source: | 3.6V Size C (Hybrid Energy Cell), included |

## Notes

Install this product according to the installation guide.

A 1-1/4" (32 mm) minimum to 1-1/2" (38 mm) maximum diameter mounting hole is required.

The minimum distance between the back of the faucet spout and the wall must be 1-3/4" (44 mm). This will allow proper clearance for setscrew access.

The maximum distance between the bathroom sink basin edge to the base of the faucet spout must be 1-3/4" (44 mm).

The maximum height of the lip basin should be 3/4" (19 mm).

Product includes rosebud spray aerator. Other aerator styles are available.

ADA, OBC, CSA B651 compliant when installed to the specific requirements of these regulations.

PL-203

KOHLER. Faucets

# Gooseneck Insight™

DM Faucet

**K-7518**

## Features

- 0.5 gal/min (1.9 l/min) flow rate.
- Factory set 30 second max. continual run cycle.
- Vandal-resistant aerator.
- 24" (610 mm) flexible supply hoses for easy installation.
- 6-3/16" (157 mm) spout reach.
- Less temperature mixer.
- Less drain.

## Material

- Brass construction.

## Technology

- Includes 30-year Hybrid Energy Cell.
- Electronic Insight™ Sensor Technology for accurate and consistent activation.

## Installation

- Single-hole mounting.
- Above-counter valve for easy installation and maintenance.

**ADA** | **CSA B651** | **OBC**

## Codes/Standards

ASME A112.18.1/CSA B125.1
NSF 372
All applicable US Federal and State material regulations
DOE - Energy Policy Act 1992
ADA
ICC/ANSI A117.1
CSA B651
OBC

See website for detailed warranty information.

## Available Color/Finishes

*Color tiles intended for reference only.*

| Color | Code | Description |
|---|---|---|
| | CP | Polished Chrome |

PL-203

KOHLER. Faucets

# Gooseneck Insight™

DM Faucet

**K-7518**

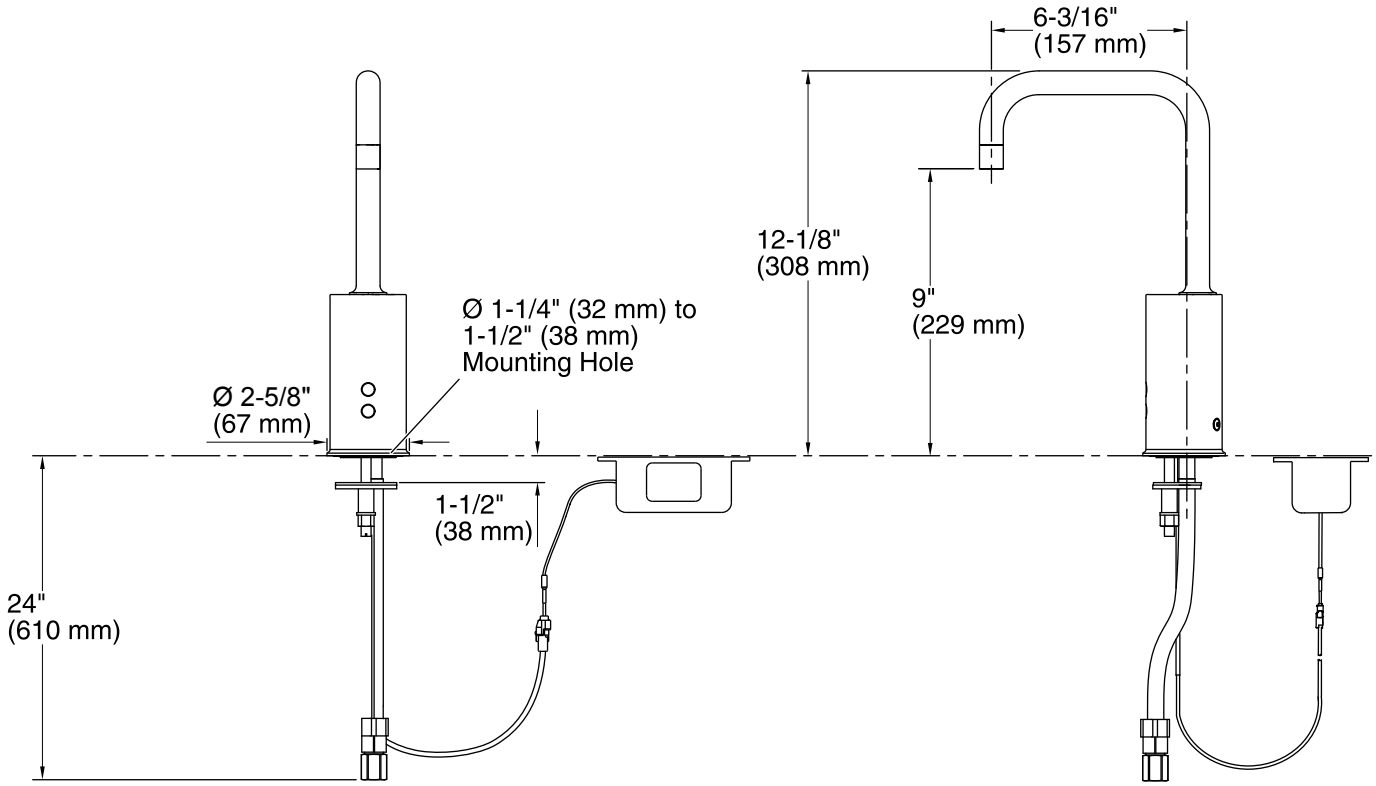


## Technical Information

All product dimensions are nominal.

| | |
|---|---|
| Valve body: | Machined Brass |

### Faucet:

| | |
|---|---|
| Flow rate: | 0.5 gal/min (1.9 l/min) |
| Power source: | 3.6V Size C (Hybrid Energy Cell), included |

## Notes

Install this product according to the installation guide.

A 1-1/4" (32 mm) minimum to 1-1/2" (38 mm) maximum diameter mounting hole is required.

The minimum distance between the back of the faucet spout and the wall must be 1-3/4" (44 mm). This will allow proper clearance for setscrew access.

The maximum distance between the bathroom sink basin edge to the base of the faucet spout must be 1-3/4" (44 mm).

The maximum height of the lip basin should be 3/4" (19 mm).

Product includes rosebud spray aerator. Other aerator styles are available.

ADA, OBC, CSA B651 compliant when installed to the specific requirements of these regulations.

PL-204-FI

Revision Date:

# Service-Sink Faucet Model: 830-AA

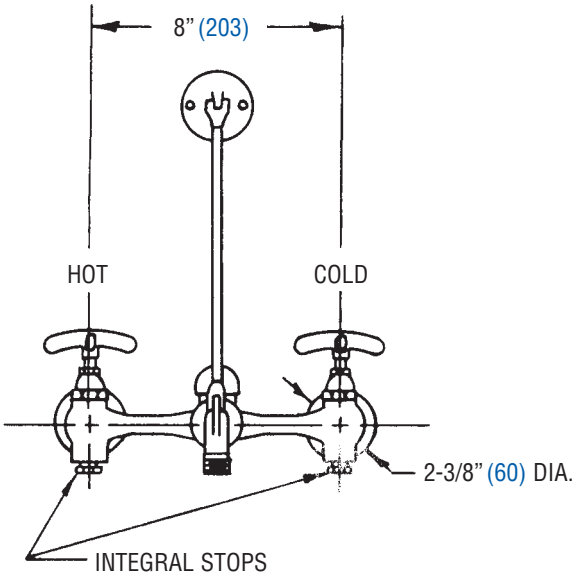


**FRONT VIEW**

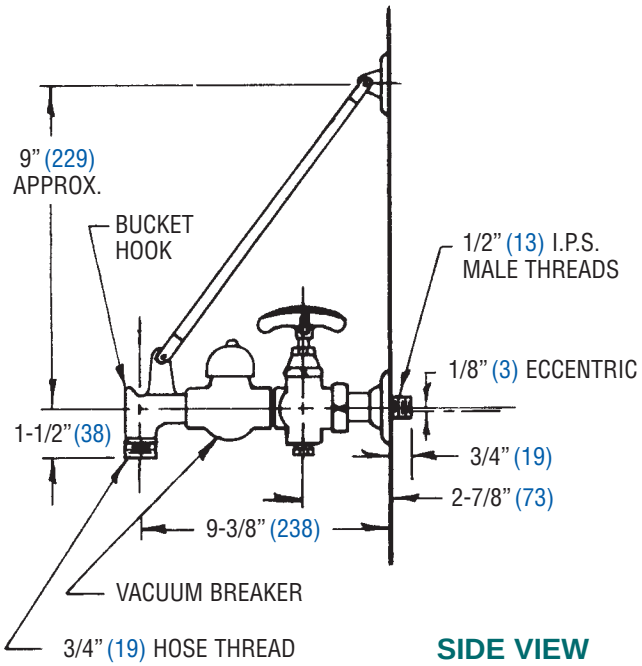


**SIDE VIEW**

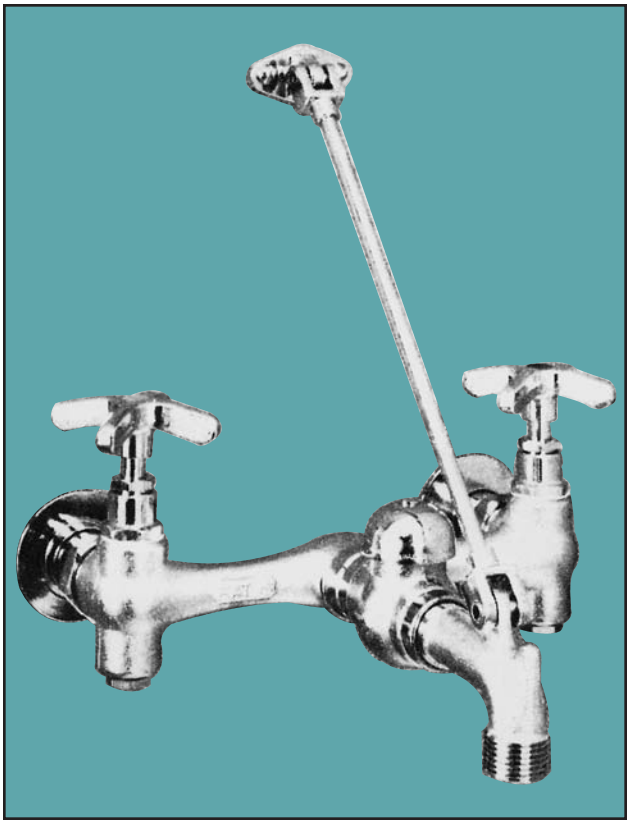

**General:** 830-AA Service Faucet - Chrome plated with vacuum breaker, integral stops, adjustable wall brace, pail hook and 3/4" hose thread on spout. Body inlets 8" center to center, four arm handles. Valves contain renewable hub, renewable seats, swivel discs, encased washers and brass washer screws.

**Material:** Commercial red brass alloy casting-rough finish.

**Finish:** Chrome plating exceeding requirements of ANSI/ASTM B-456-71. Indicators cold (blue) and hot (red) are included.

**Specifications and Codes:** In the U.S.A., meets or exceeds requirements of ANSI-A112.18.1M-1979 for "Finished and Rough Brass Plumbing Fixture Fittings." In Canada, meets or exceeds the requirements of CSA standards B125 - "Plumbing Fittings," B64.1.1 - "Vacuum Breakers - Atmosphere Type" and B64.0 - "General Requirements for Backflow Preventers and Vacuum Breakers," and is approved under Product Class No. 6811 01 under Report #LM57412-1. Conforms to ASSE 1001.

**NOTE:** These roughing measurements may vary 1/4" (plus or minus).

FIAT PRODUCTS®
A CRANE PLUMBING COMPANY

255 Hutchings St. • Winnipeg, MB • R2X 2R4 • Ph. 800-665-7531 • 204-633-6122 • Fx. 204-632-4854
e-mail: info@fiat.ca • website: www.fiat.ca

A subsidiary of CR/PL, L.L.C. Company – Evanston, IL

PL-204-FI

Revision Date:

FIAT

# 830-AA Group Replacement Assembly Parts List

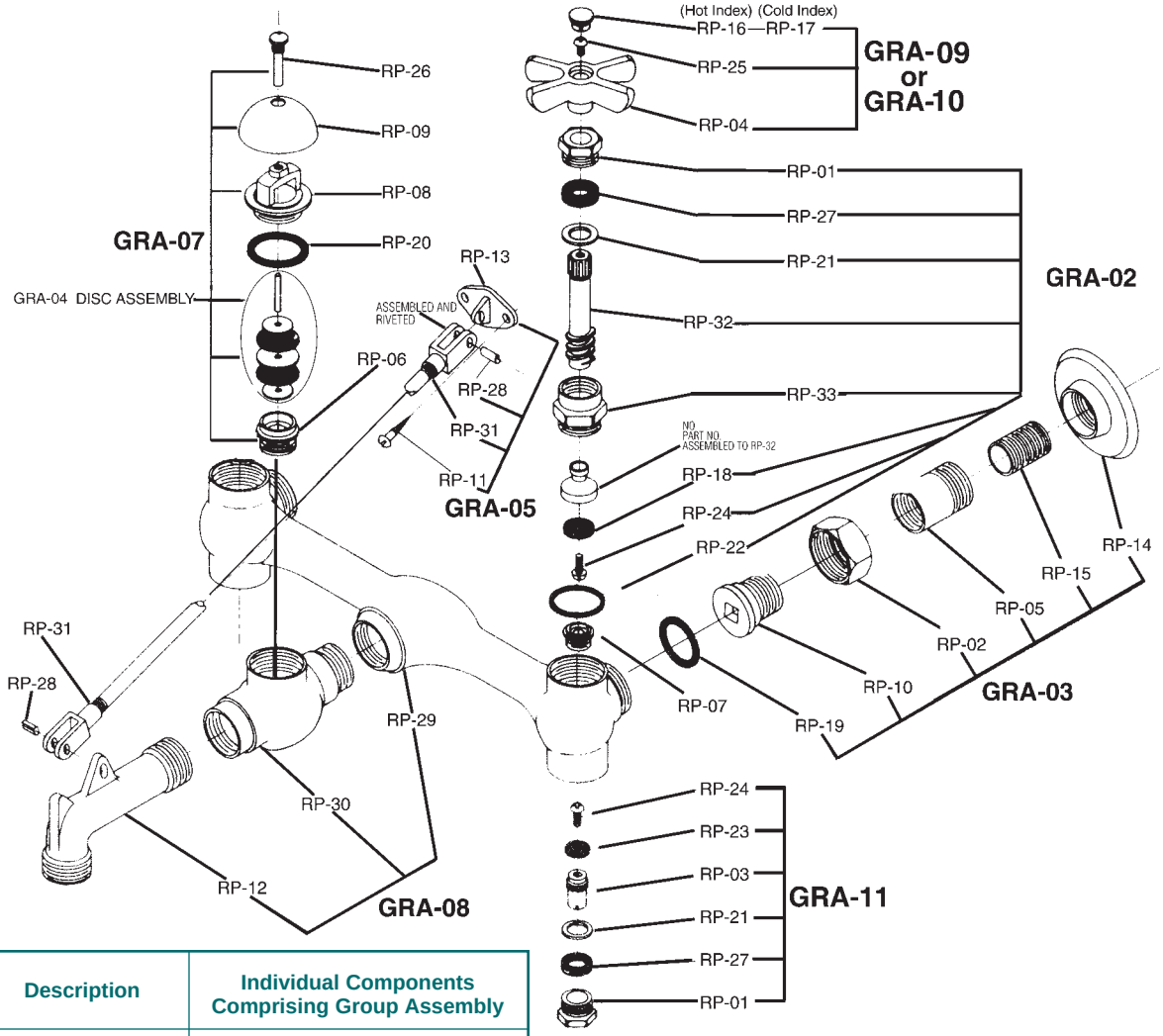


| Group Assembly Part # | Description | Individual Components Comprising Group Assembly | |
|---|---|---|---|
| GRA-02 | Handle Mounting Group Assembly | RP-01<br>RP-27<br>RP-21<br>RP-32<br>RP-33<br>RP-18<br>RP-24<br>RP-22 | Packing Nut<br>Packing<br>Brass Washer<br>Spindle<br>Handle Hub<br>Seat Washer<br>Seat Washer Screw<br>Hub Washer |
| GRA-03 | Coupling Assembly | RP-14<br>RP-15<br>RP-05<br>RP-02<br>RP-10<br>RP-19 | Wall Flange<br>Nipple<br>Bushing (socket)<br>Coupling Nut<br>Swivel<br>Washer |
| GRA-05 | Brace Assembly | RP-13<br>RP-28(2)<br>RP-31<br>RP-11(2) | Brace Flange<br>S.S. Roll Pin<br>Wall Brace Rod<br>Wood Screw |
| GRA-07 | Vacuum Breaker & Disc Assembly | RP-26<br>RP-09<br>RP-08<br>RP-20<br>RP-06<br>GRA-04 | V.B. Cap Screw<br>Cap<br>V.B Hub<br>V.B Hub Washer<br>Seat<br>Vacuum Breaker Disc Assembly |

| Group Assembly Part # | Description | Individual Components Comprising Group Assembly | |
|---|---|---|---|
| GRA-08 | Complete Body Assembly | RP-29<br>RP-30<br>RP-12 | Center Body<br>V.B. Body<br>Nozzle |
| GRA-09 | Handle Assembly (Cold) | RP-17<br>RP-25<br>RP-04 | Cold Index<br>Handle Screw<br>Handle |
| GRA-10 | Handle Assembly (Hot) | RP-16<br>RP-25<br>RP-04 | Hot Index<br>Handle Screw<br>Handle |
| GRA-11 | Integral Stop Assembly | RP-24<br>RP-23<br>RP-03<br>RP-21<br>RP-27<br>RP-01 | Seat Washer Screw<br>Washer<br>Spindle<br>Brass Washer<br>Packing<br>Packing Nut |
| RP-07 | (2 per package) | RP-07 | Seat |

PL-204-MO
Revision Date:

MOEN® COMMERCIAL

# Specifications

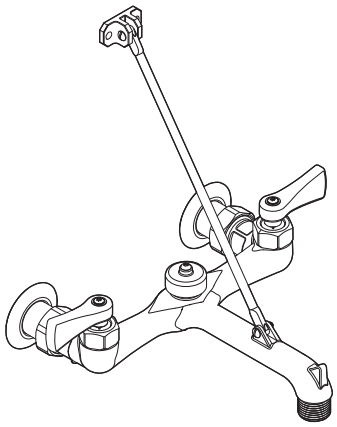

**Two-Handle Service Sink Faucet**

**Model:** 8230 (Chrome)

BUY AMERICAN ACT COMPLIANT

## FAUCET DESCRIPTION
- Brass construction, rough chrome finish
- Integral vacuum-breaker
- 3/4" Garden hose threaded spout
- 1/2" IPS eccentric connections
- "Service stops"
- "Wall mounting bracket"
- Vandal resistant torx head screws

## OPERATION
- Lever style handles with hot and cold color indicators

## FLOW
- Unrestricted

## CARTRIDGE
- Brass shell ceramic disc cartridge
- 1/4 turn operation

## STANDARDS
- Third party certified by IAPMO and CSA to meet ASME A112.18.1M and all applicable specifications referenced therein
- **ADA** for lever handles

## WARRANTY
- Warranted for 5 years against material or manufacturing defects

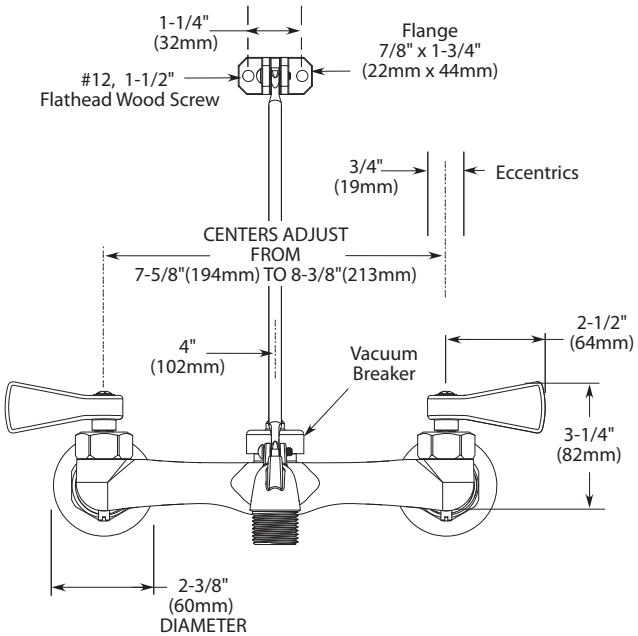


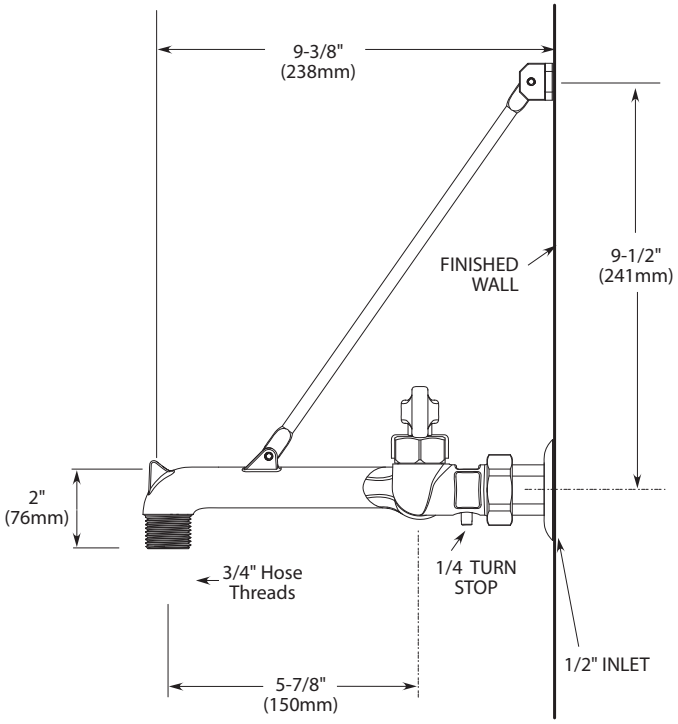


## CRITICAL DIMENSIONS

(DO NOT SCALE)

American Standard
Style That Works Better

# RELIANT+
## SINGLE CONTROL KITCHEN FAUCET
### WITH CAST BRASS SPOUT

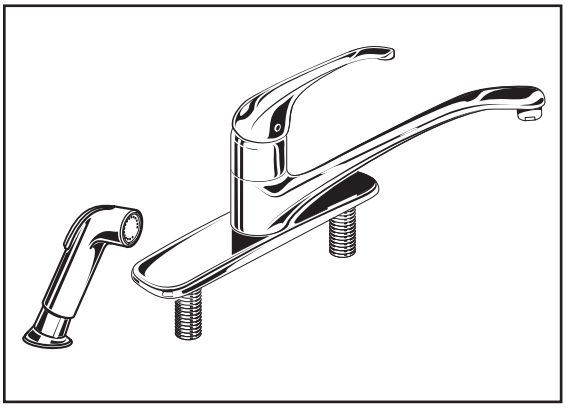

**4205.001 Shown**

## MODEL NUMBER:

- ❑ **4205.001 Kitchen Faucet**
  Metal Lever Handle. Separate color-matched handspray.
- ❑ **4205.001.F15 Kitchen Faucet**
  Same as above. 1.5gpm flow rate.
- ❑ **4205.000 Kitchen Faucet**
  Metal Lever Handle. Less handspray.
- ❑ **4205.000.F15 Kitchen Faucet**
  Same as above. 1.5gpm flow rate.

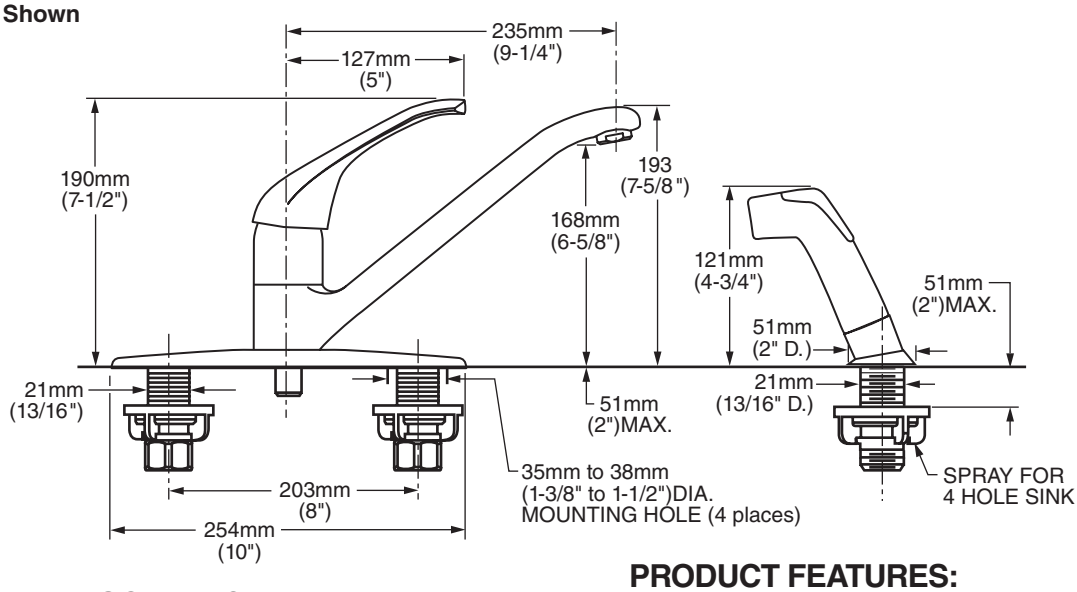


## GENERAL DESCRIPTION:

Washerless 47mm ceramic disc valve cartridge with integral hot limit safety stop. Cast brass waterway with 1/2" male inlet shanks. Cast brass 9-1/4" (235mm) swivel spout, metal escutcheon plate (escutcheon size 10" L x 2-5/16" W), and metal handle. 2.2gpm/8.3L/min. maximum flow rate, 1.5gpm/5.7 L/min. maximum flow rate for F15 models.

## PRODUCT FEATURES:

**Ceramic Disc Valve Cartridge:** Assures a lifetime of drip-free performance.

**Cast Brass Waterway, Cast Brass Spout:** Highest quality faucet materials for durability and long life.

**Higher and Longer Spout:** Spout designed to allow more room under spout and extended reach into the sink.

**Memory Position Valving:** Allows user to turn valve on and off at preferred temperature setting without readjusting handle position each time.

**Adjustable Hot Limit Safety Stop:** Limits the amount of hot water allowed to mix with cold. Reduces the risk of accidental scalding.

**Lead Free:** Faucet contains ≤ 0.25% total lead content by weighted average.

**Simple Installation:** Fast and easy one person installation. Faucet drops in from top. Quick-spin nuts secure faucet in place.

## SUGGESTED SPECIFICATION:

Single control kitchen faucet shall feature a cast brass body and swivel spout, and all metal handle. Shall also feature washerless 47mm ceramic disc valve cartridge with integral hot limit safety stop. Fitting shall be American Standard Model # 4205.00_.___. ___



© 2010 AS America Inc.

# RELIANT+
## SINGLE CONTROL KITCHEN FAUCET
### WITH CAST BRASS SPOUT

## CODES AND STANDARDS

These products meet or exceed the following codes and standards:

**ANSI A117.1**
**ASME A112.18.1**
**CSA B 125**
**NSF 61/Section 9 & Annex G**

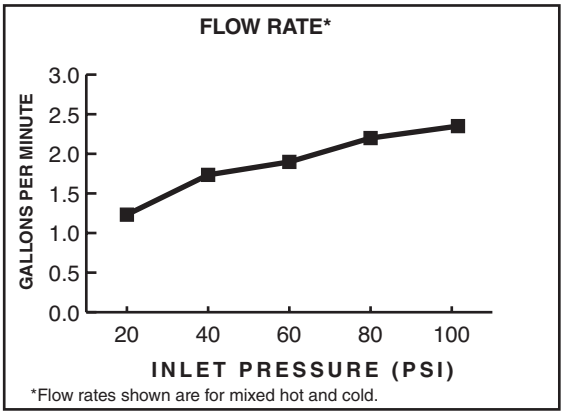


**2.2gpm/8.3L/min. FLOW RATE**

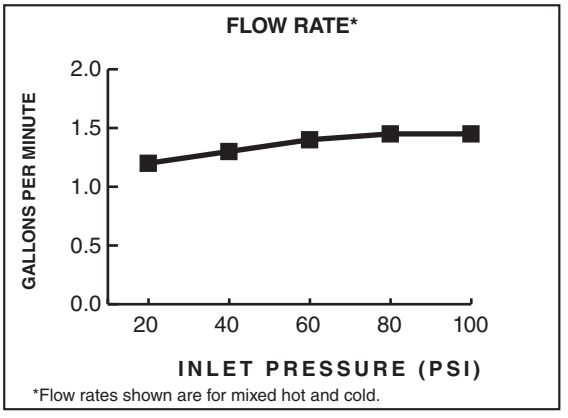


**1.5gpm/5.7 L/min. FLOW RATE**

| Product Number | Description | Finish: Polished Chrome 002 |
|---|---|---|
| 4205.001 | Kitchen faucet. Cast brass waterway with 1/2" male inlet shanks. Separate handspray. | |
| 4205.001.F15 | Same as above. 1.5gpm/5.7 L/min. flow rate. | |
| 4205.000 | Kitchen faucet. Cast brass waterway with 1/2" male inlet shanks. Less handspray. | |
| 4205.000.F15 | Same as above. 1.5gpm/5.7 L/min. flow rate. | |

Meets the American Disabilities Act Guidelines and **ANSI A117.1** Requirements for the physically challenged.


© 2011 AS America Inc.

MUSTEE
*Preferred by the "Pros"*

PL-206
Revision Date:

# UTILATUB® and UTILATWIN® Laundry/Utility Tub Accessories

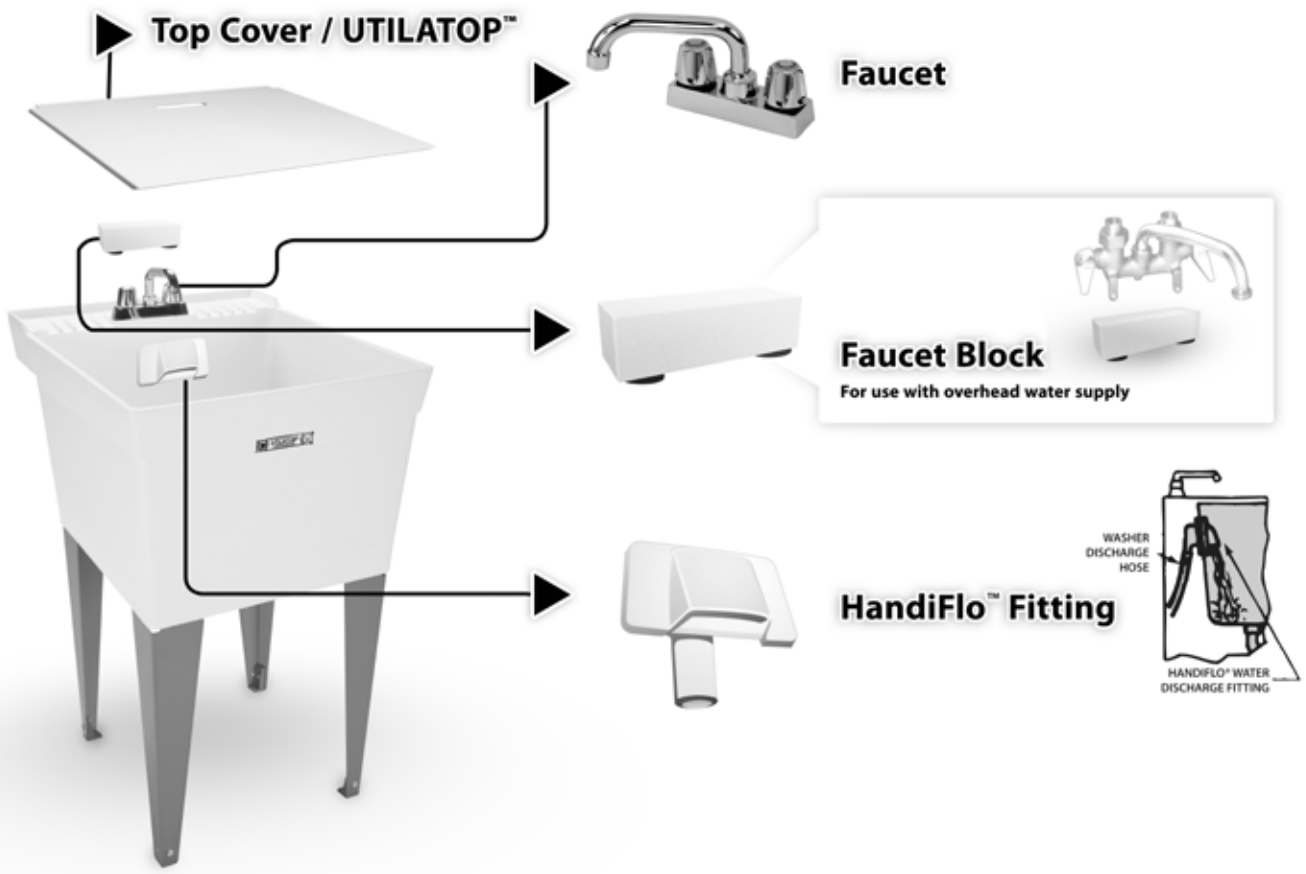


## Faucet

| Model No. | UPC |
|---|---|
| 93.600 | 6 71031 00232 7 |

Chrome finish, 4" center set brass faucet. 7" swing spout with aerator, level handles, replaceable seats and stems. Areator or hose end.

## Faucet Block

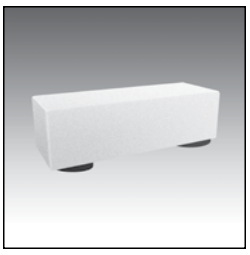

| Model No. | UPC |
|---|---|
| 20.600 | 6 71031 00031 6 |

Used when water supply lines are above the tub. Mounts to tub shelf when using a clamp-on faucet.

## HandiFlo™ Fitting

| Model No. | UPC |
|---|---|
| 94.700 | 6 71031 00287 7 |

Dispenses water from washing machine discharge hose into laundry tub. Eliminates draping washer machine hose over back/side wall of laundry tub and conceals discharge hose. Mounts to back or side wall of laundry tub, includes mounting hardware.

## Top Cover / UTILATOP®

| Model No. | UPC | Fits |
|---|---|---|
| 92.200 Top Cover (White) | 6 71031 00292 1 | 91 & 94 DURATUB® |
| 92.206 Top Cover (Almond) | 6 71031 00401 7 | 91AL |
| 92.201 Top Cover (Biscuit) | 6 71031 00402 4 | 91BT |
| 19.204A UTILATOP® (White) | 6 71031 00380 5 | 19F, 19W, 18F, 18W |

Completely covers tub to create additional counter space. UTILATOP® supports up to 40 lbs.

MUSTEE
**E.L. Mustee & Sons, Inc. • 5431 West 164th Street • Brook Park, OH 44142 • Phone: 216.267.3100 • Fax: 216.267.9997**
**E-mail: info@mustee.com. • Web: www.mustee.com • Proudly made in the USA**

Notice: Our continuous commitment to product improvement may result in changes to product specifications without notice.
Patents pending. Made and Printed in U.S.A.

# Electronic Faucets

## EC-3101

**TAG:** PL-207

Revision Date:

ChekPoint™ *Electronic Sensor Faucet*

**Architect/Engineering Specifications:**

Single hole wall mount electronic sensor faucet with polished chrome plated brass body and 4 1/8" rigid gooseneck, 2.2 GPM vandal resistant aerator, AC/DC control module with internal flow control setting switches, temperature control mixing valve with check valves and 18" flexible stainless steel supply hoses with 3/8" compression connections. Certified to ASME A112.18.1/CSA B125.1, NSF 61-Section 9, NSF 372 and UL 1951. Meets ADA ANSI/ICC A117.1 requirements.

Job Name_____

Model Specified_____Quantity_____

Variations Specified_____

Date_____

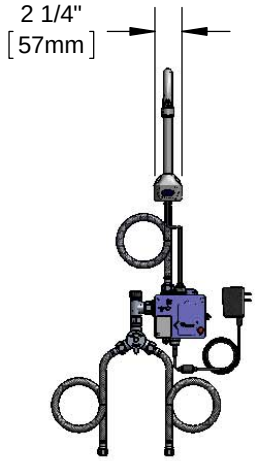

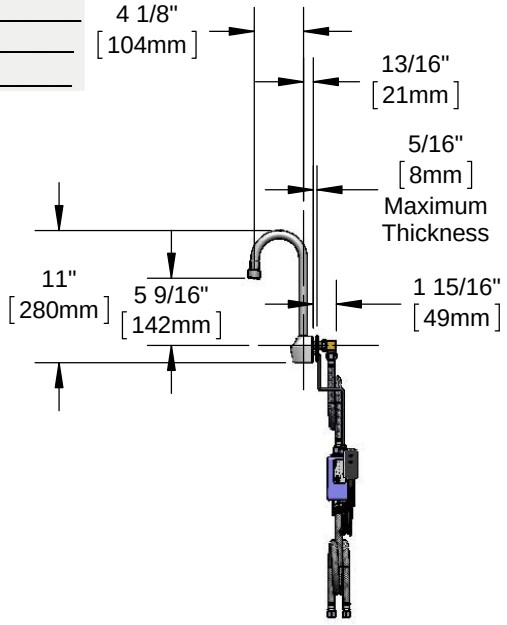


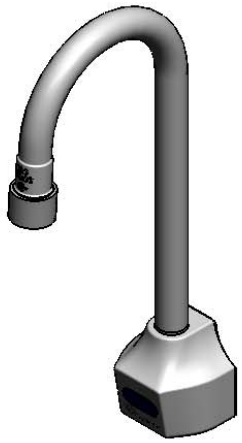

**Features & Benefits:**

- Single hole wall mount faucet w/ polished chrome plated brass body
- 4 1/16" rigid gooseneck
- 2.2 GPM vandal resistant aerator, Series 6 (B-0199-06)
- Water resistant control module w/ internal flow control switches for adjusting auto time out & shut off delay settings
- Optional auto flush feature flows water for 30 seconds after every 12 inactive hours
- Plug in AC transformer or (4) AA battery (DC) power options
- Mechanical temperature mixing valve w/ check valves
- Two flexible stainless steel supply hoses w/ 3/8" compression connections
- Low battery LED indicator light
- Material: Polished chrome plated brass body and tubular spout

**Product Compliance:**

- ASME A112.18.1 / CSA B125.1
- NSF 61 - Section 9
- NSF 372 (Low Lead Content)
- ANSI A117.1 (ADA)
- UL 1951

**Warranty:** Three Year (Limited)

ADA Compliant

**Performance Data:**

- Pressure: 20 - 125 psi
- Temperature: 40°F - 140°F
- Flow Rate: 2.2 GPM @ 60 psi
- Water Consumption: @ 10 sec = .37 gal
  @ 15 sec = .55 gal

**Optional Outlets (Series 1 / VR Series 6)**

| GPM | Aerated | Non-Aerated (Laminar) | VR Aerated | VR Non-Aerated (VR Laminar) |
|---|---|---|---|---|
| 0.35 | N/A | ☐ B-0199-01-N035 | N/A | ☐ B-0199-06-N035 |
| 0.5 | N/A | ☐ B-0199-01-N05 | N/A | ☐ B-0199-06-N05 |
| 1.0 | ☐ B-0199-01-F10 | N/A | ☐ B-0199-06-F10 | N/A |
| 1.5 | ☐ B-0199-01-WS | ☐ B-0199-29 | ☐ B-0199-06-WS | ☐ B-0199-29VR |
| 2.2 | ☐ B-0199-01 | ☐ B-0199-21 | Standard | ☐ B-0199-21-VRF |


**T&S BRASS AND BRONZE WORKS, INC.**

• 2 Saddleback Cove • Travelers Rest, SC 29690
Ph 800-476-4103 • Fax 864-834-3518
• Simi Valley, CA • Ph 800-423-0150 • www.tsbrass.com


Date: 08/26/16

KOHLER. Faucets

PL-208
Revision Date:

# Purist®
## Wall-Mount Bathroom Faucet Trim
## K-T11839

### Features
- 0.5 gal/min (1.9 l/min) flow rate.
- This is trim set only. It requires valve kit to complete the faucet.
- Vandal-resistant aerator.
- 9" (229 mm) spout reach.
- Less drain.
- Safe Drinking Water Act (SDWA- Low Lead) compliant.
- On demand on and off. Valve kit is factory set to 30 second max. continual run cycle if it turned on continuously.

### Material
- Brass construction.

### Technology
- Valve kit has electronic Insight™ Sensor Technology for accurate and consistent activation.
- This trim set can be used with 11830-NA (Hybrid power) wall mount valve or 11843-NA (AC Power) wall mount valve.

### Installation
- Single-hole spout mounting. Please consider appropriate distance between spout and sensor.
- Below the counter valve for easy installation and maintenance.

### Required Accessories
K-11830 Wall-mount Valve for Touchless Faucets
**or**
K-11843 Wall-mount Valve for Touchless Faucets

### Optional Accessories
1160593 .35 gpm Aerator, Small

**ADA** | **CSA B651** | **OBC**

### Codes/Standards
ASME A112.18.1/CSA B125.1
NSF/ANSI 372
All applicable US Federal and State material regulations
DOE - Energy Policy Act 1992
California Energy Commission (CEC)
ADA
ICC/ANSI A117.1
CSA B651
OBC

### KOHLER® One-Year Limited Warranty
See website for detailed warranty information.

### Available Color/Finishes
*Color tiles intended for reference only.*

| Color | Code | Description |
|---|---|---|
| | CP | Polished Chrome |
| | VS | Vibrant® Stainless |

KOHLER. Faucets

PL-208
Revision Date:

# Purist®

## Wall-Mount Bathroom Faucet Trim

## K-T11839

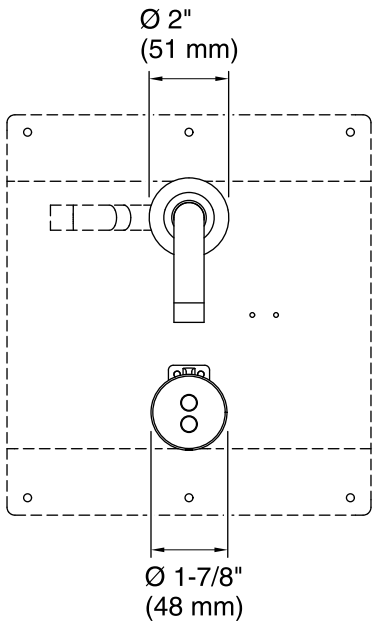


**Valve Mounting Plate**
(not included)

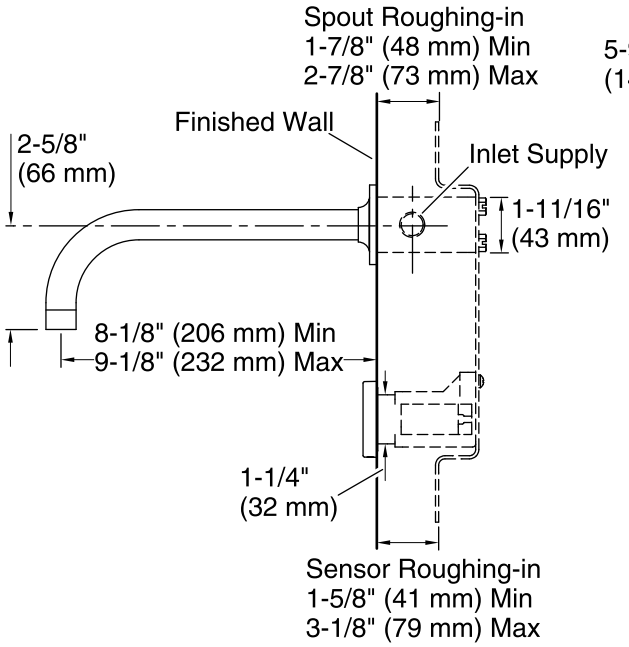


**Valve Control Box**
(not included)

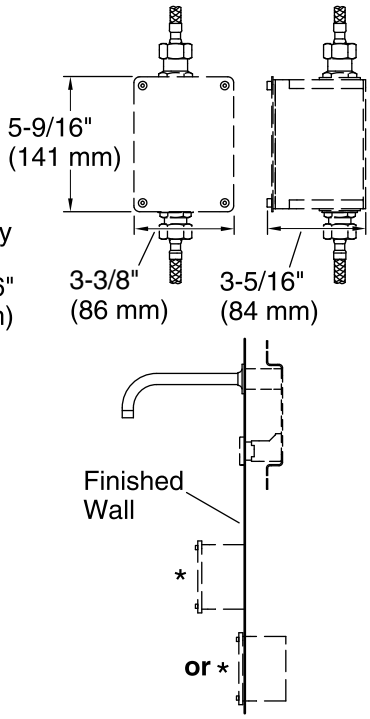


***Valve Control Box Mounting Options**

### Technical Information

All product dimensions are nominal.

### Faucet:

| | |
|---|---|
| Flow rate: | 0.5 gal/min (1.9 l/min) |
| Pressure: | 60 psi (4.1 bar) |

### Notes

Install this product according to the installation guide.

The sensor roughing-in allows for installation to a back splash or thicker finished wall than the spout roughing-in.

ADA, OBC, CSA B651 compliant when installed to the specific requirements of these regulations.

# Elongated Floor Mounted ADA Closet Fixture Model ST-2029

PL-303

Revision Date:

## ▶ Code Number

2102029

## ▶ Description

Vitreous china floor mounted ADA compliant water closet

## ▶ Flush Cycle

- Flush volume is determined by the flushometer used with fixture
- 1.1 to 1.6 gpf/4.2 to 6.0 Lpf

## ▶ Fixture Specification

- Floor mounted, Floor outlet
- Siphon jet flushing action achieves 1000g Map score when used with any Sloan flushometer
- 2 1/8" fully glazed trapway diameter
- Integral flushing rim
- Elongated bowl
- Water spot area 10" x 7-1/2"
- Closet bolts and caps included
- Toilet seat not included
- 1-1/2" I.P.S. top spud inlet
- White Vitreous china

## ▶ Recommended Seats

- Bemis - 1955CT/1955SSCT & 2155CT/2155SSCT
- Church - 295CT/295SSCT & 2155CT/2155SSCT

## ▶ Plumbing System Requirements

- Maximum Static Pressure: 80 PSI
- Minimum Flowing Pressure: 25 PSI
- Minimum Flow Rate: 25 GPM

## ▶ Product Specification

- Elongated water closet shall be made of vitreous china with a 1-1/2" top spud. Bowl shall be ADA Compliant when installed at required height of 17" from floor to top of fixture. Water Closet shall be Sloan Model ST-2029.

## ▶ Notes

- All information contained in this document subject to change without written notice
- This model meets the requirements for a High Efficiency Toilet when used with a high efficiency flushometer (1.28 gpf/4.8 Lpf or 1.1/1.6 gpf-4.2/6.0 Lpf dual-flush).
- All vitreous china dimensions shown in these drawings are nominal and not to scale. Dimensions can vary within the tolerances established in the governing ASME A112.19/CSA B45.1 standard. It is important to consider this when planning rough-in and plumbing layouts.

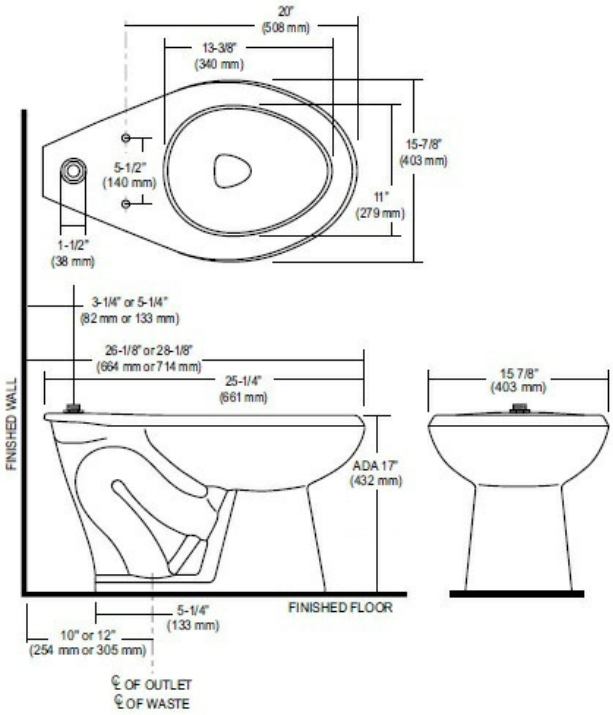


## ▶ Compliance & Certifications

HIGH-EFFICIENCY TOILET

CALGreen

This space for Architect/Engineer Approval


SLOAN 10500 SEYMOUR AVE. ● FRANKLIN PARK, ● IL. 60131

Ph: 1-800-9-VALVE-9 or 1-847-671-4300 ● Fax: 1-800-447-8329 or 1-847-671-4380 ● http://www.sloan.com

PL-304

Revision Date:

KOHLER®

# STRONGHOLD®

## COMMERCIAL TOILET SEAT
# K-4731

**ADA**

## Features

- *Solid polypropylene plastic*
- *Elongated open-front*
- *Ergonomic contour adds additional comfort*
- *Integrated handle allows user to easily raise and lower the ring*
- *Stainless steel hinge arms and hardware*
- *Less cover*
- *ADA compliant when installed with an ADA compliant toilet*
- *Anti-microbial agent inhibits growth of odor-causing bacteria, mold, and mildew [-CA, -GA, -SA]*
- *Check hinge stops seat from leaning back and applying pressure on tank/flushometer [-C, -CA]*
- *Self-sustaining check hinge prevents slamming with check hinge functionality [-SC, -SA]*
- *Quiet-Close™ check hinge will slowly close with check hinge functionality [-GC, -GA]*

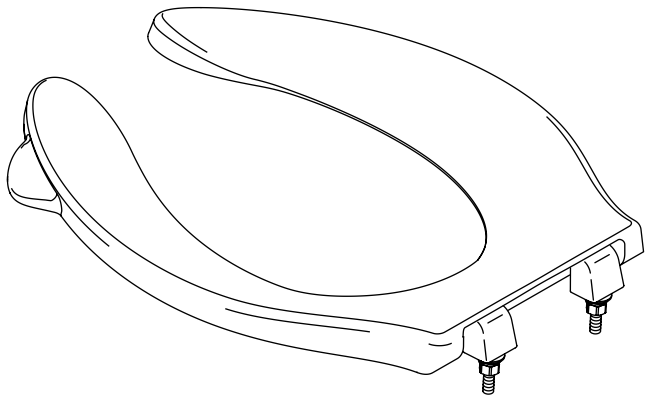

## Codes/Standards Applicable

Specified model meets or exceeds the following:

- *ADA*
- *ANSI Z124.5*

## Colors/Finishes

- 0: White
- 7: Black Black™
- Other: Refer to Price Book for additional colors/finishes

## Specified Model

| Model | Description | Colors/Finishes | | |
|---|---|---|---|---|
| K-4731-C | Elongated open-front seat – check hinge | ❑ 0 | ❑ 7 | ❑ Other____ |
| K-4731-CA | Elongated open-front seat – check hinge and anti-microbial agent | ❑ 0 | | |
| K-4731-GC | Elongated open-front seat – Quiet-Close™ check hinge | ❑ 0 | ❑ 7 | ❑ Other____ |
| K-4731-GA | Elongated open-front seat – Quiet-Close™ check hinge and anti-microbial agent | ❑ 0 | | |
| K-4731-SC | Elongated open-front seat – self-sustaining check hinge | ❑ 0 | ❑ 7 | ❑ Other____ |
| K-4731-SA | Elongated open-front seat – self-sustaining check hinge and anti-microbial agent | ❑ 0 | | |

## Product Specification

The elongated open-front toilet seat shall be made of solid polypropylene plastic. Product shall be less cover. Product shall have stainless steel hinge arms and hardware. Product shall feature an ergonomic contour which adds additional comfort. Product shall feature an integrated handle which allows the user to easily raise and lower the ring. Product shall feature an anti-microbial agent which inhibits growth of odor-causing bacteria, mold, and mildew [-CA, -GA, -SA]. Product shall feature a check hinge which stops the seat from leaning back and applying pressure on the tank/flushometer [-C, -CA]. Product shall feature a self-sustaining check hinge which prevents slamming with check hinge functionality [-SC, -SA]. Product shall feature a Quiet-Close™ check hinge which will slowly close with check hinge functionality [-GC, -GA]. Product shall be ADA compliant when installed with an ADA compliant toilet. Toilet seat shall be Kohler Model K-4731-____-____.



USA/Canada: 1-800-4KOHLER
(1-800-456-4537)
www.kohler.com

# STRONGHOLD®

## Installation Notes

Install this product according to the installation guide.

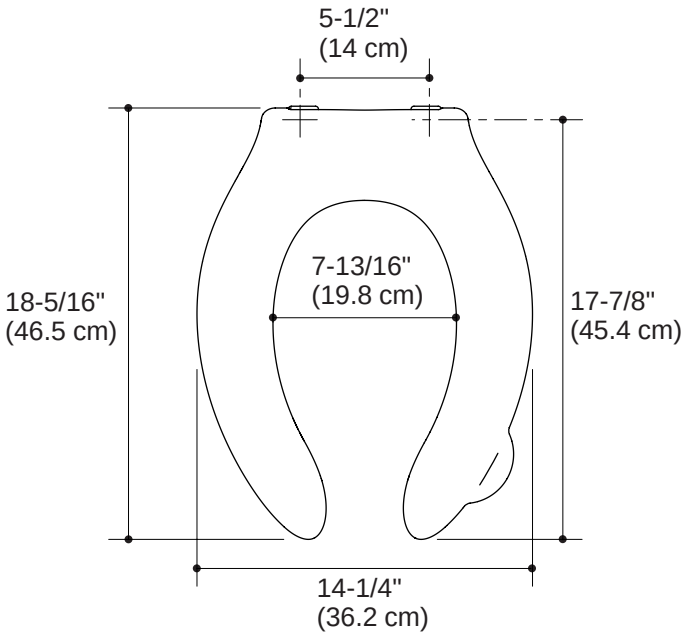


## Product Diagram



THE BOLD LOOK OF KOHLER®

PL-305-MO

Revision Date:

MOEN® COMMERCIAL

# Specifications

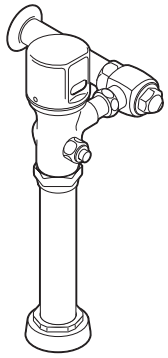

**Exposed, Battery Powered, Sensor Activated Closet Flush Valve**

**Models:** 8310, 8310DF16, 8311

## PRODUCT DESCRIPTION
- Brass construction w/chrome plated finish
- 1" IPS supply
- 1-1/2" top spud

## OPERATION
- Adjustable sensor eyes
- Battery powered (4) standard AA (included)
- Average battery life 250,000 cycles
- Self-diagnostic electronics
- Piston flushing mechanism
- Self cleaning filter system
- Low battery indicator light

## FLOW RATE
  - 8310 (1.6gpf/6.0Lpf)
  - 8310DF16 (1.0/1.6gpf 3.8/6.0Lpf) – 1.0gpf up to 60 seconds/1.6gpf after 60 seconds
  - 8311 (1.28gpf/4.8Lpf) ◊
- Operating pressures 10 to 125 psi
- 24 hour sentinel flush
- Manual override button

## STOP VALVE
- 1" IPS angle stop (vandal resistant)
- Adjustable installation (left or right connection)

## STANDARDS
- Third party certified by IAPMO and CSA to meet ASME A112.19.2M and all applicable requirements referenced therein and complies with requirements of ASSE 1037
- ADA

## WARRANTY
- Warranted for 5 years against material or manufacturing defects

◊ *Intended for use with matching flow rates as specified by the fixture manufacturer*

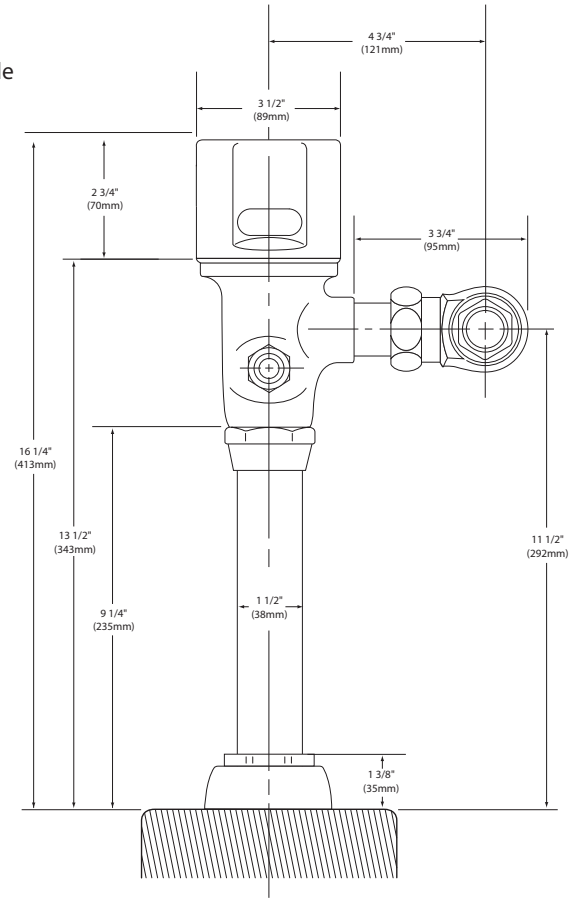


## CRITICAL DIMENSIONS

(DO NOT SCALE)




08/29/2016 SPC14751 50000109911
Released 00

# Sloan ECOS® Flushometers
# ECOS 8113-1.6/1.1

PL-305-SL
Revision Date:

## ▶ Description
Exposed, Battery Powered, Sensor Activated Sloan ECOS® Electronic Dual Flush Model Water Closet Flushometer for floor mounted or wall hung top spud bowls.

## ▶ Flush Cycle
Full Flush (Large Button) / 1.6 gpf/6.0 Lpf Reduced Flush (Small Button) / 1.1 gpf/4.2 Lpf

## ▶ Specifications
Quiet, Exposed, Diaphragm Type, Closet Flushometer for either left or right hand supply with the following features:

- Trap Primer
- Handle Packing, Main Seat, Stop Seat and Vacuum Breaker Molded from PERMEX® Rubber Compound for Chloramine resistance
- Initial Set-up Range Indicator Light (first 10 minutes)
- User friendly three (3) second Flush Delay
- "Low Battery" Flashing LED
- Reduces water volume by up to 30% when a reduced flush occurs
- Sweat solder adapter with cover tube and cast wall flange with set screw
- Latching Solenoid Operator
- Fixed Metering Bypass and No External Volume Adjustment to Ensure Water Conservation
- If the user is present for less than one minute and leaves the sensing zone or chooses the small override button, a reduced flush initiates (1.1 gpf/4.2 Lpf) eliminating liquid and paper waste, saving 1/2 gallon of water
- If the user is present for greater than one minute and leaves the zone or chooses the large override button, the full fl ush initiates (1.6 gpf/ 6.0 Lpf) eliminating solid waste and paper
- Engineered Metal Cover with replaceable Lens Window
- PERMEX® Synthetic Rubber Flex Tube Diaphragm with Dual filtered bypass designed for improved life and reduced maintenance
- ADA Compliant Sloan ECOS® Electronic Battery Powered Infrared Sensor for automatic "No Hands" operation
- Infrared Sensor with Multiple-focused, Lobular Sensing Fields for high and low target detection with range adjustment screw
- Four (4) Size AA alkaline Batteries included: Duracell® with DURALOCK Power Preserve TechnologyTM-guaranteed for up to 10 years in storage

Valve Body, Tailpiece and Control Stop shall be in conformance with ASTM Alloy Classification for Semi-Red Brass. Valve shall be in compliance with the applicable sections of ASSE 1037. Installation conforms to ADA requirements.

- Courtesy Flush® Override Button
- Flush accuracy controlled by CID® technology
- Spud Coupling and Flange for 1 1/2" Top Spud
- 1" I.P.S. Screwdriver Bak-Chek® Angle Stop with Free Spinning Vandal Resistant Stop Cap

## ▶ Special Finishes
- Brushed Stainless (PVD finish)
- Brushed Nickel (PVD Finish)

## ▶ Code Number
3370403

## ▶ Manual Operation
Sloan ECOS® Electronic Flushometers incorporate intuitive button design for easy manual activation. Straightforward graphics alert user to proper activation. The reduced flush for liquid waste or full flush for solid waste. To further educate the user, two (2) instructional wall plates are included with each Sloan ECOS® Flushometer.

## ▶ Automatic Operation
Sloan ECOS® Flushometers can also be activated via multi-lobular infrared sensor. By detecting user presence and duration, the Sloan ECOS® Smart Sense Technology™ will determine the proper flush volume for unequalled water efficiency.

## ▶ Functional & Hygienic
Touchless, sensor operation eliminates the need for user contact to help control the spread of infectious diseases. The Sloan ECOS® Electronic Flushometers are provided with Override Buttons to allow a "courtesy flush" for individual user comfort.

## ▶ Patented
D598,976

## ▶ Compliance & Certifications
Buy American Act Compliant
HET HIGH-EFFICIENCY TOILET
UPC C ®
UL LISTED 376U

This space for Architect/Engineer Approval

## ▶ OPERATION

- Polished Brass (PVD Finish)

## ▶ Accessories (Sold Separately)

See Accessories Section and Sloan ECOS® accessories section of the Sloan catalog for details on these and other Sloan ECOS® flushometer variations.

## ▶ Fixtures

Consult factory for matching Sloan brand fixture options.

## ▶ ELECTRICAL SPECIFICATIONS

### Battery Type

- (4) AA Lithium

### Battery Life

- 3 Years @ 4,000 flushes/month

### Control Circuit

- Solid State
- 6 VDC Input
- 8 Second Arming Delay
- 3 Second Flush Delay

### Sensor Type

- Active Infrared

### Sensor Range

- Nominal 22" - 42" (559 mm - 1067 mm) Self-adaptive Window: ± 10" (254 mm)

### Indicator Lights

- Range Adjustment

### Operating Pressure

- 15 - 100 psi (104 - 689 kPa)

## ▶ ROUGH-IN

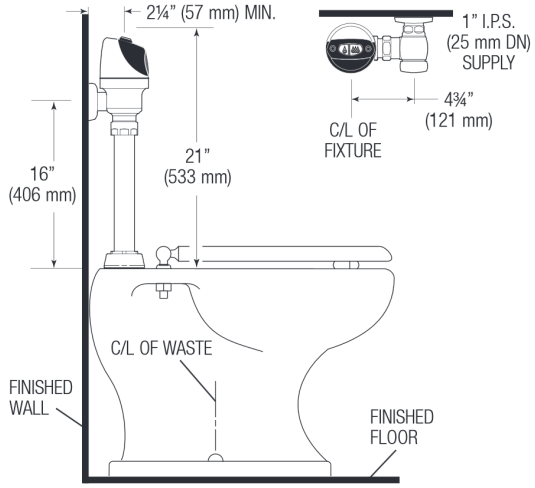


Model 8113

1. A continuous, invisible light beam is emitted from the Sloan ECOS® Flush Sensor.

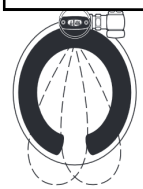

2. As the user enters the beam's effective range, 22" to 42" (559 mm to 1067 mm), the beam is reflected into the Scanner Window to activate the Output Circuit. Once activated, the Output Circuit continues in a ""hold"" mode for as long as the user remains within the effective range of the sensor. If the user stays longer than 65 seconds, a full flush will automatically initiate when the user leaves.

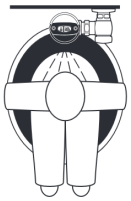

3. Once a user is detected, if the user leaves in 65 seconds or less, a reduced flush will automatically initiate. The circuit automatically resets and is ready for the next user.

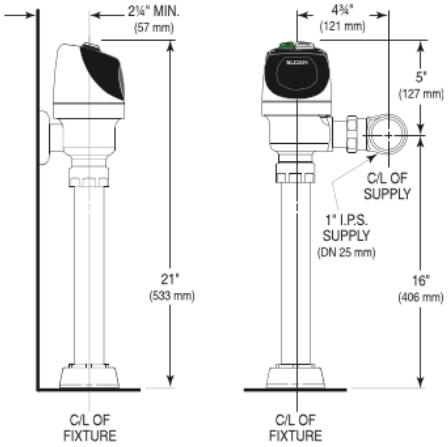

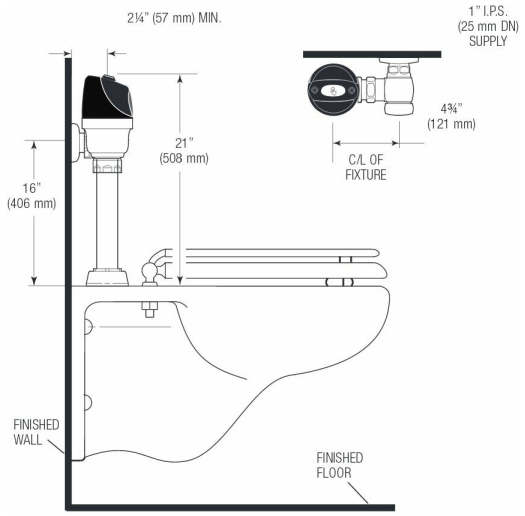


The Model 8113 valve is designed for installations where toilet seat with covers are being used.

When installing the Sloan ECOS® Electronic Dual Flush in a handicap stall: Per the ADA Guidelines (section 604.9.4) it is recommended that the grab bars be split or shifted to the wide side of the stall.

KOHLER®

PL-306
Revision Date:

# Steward®
Waterless Urinal
**K-4917**

## Features
- Waterless urinal.
- 14-3/4" extended rim.

## Material
- Vitreous china.

## Optional Accessories
18773

## Components
Additional included component/s: 2" Outlet Spud, Hanger (2 Required), Removable Strainer, 3 oz (89 ml) Sealing Liquid Sample, Cleaner Sample, and Urinal Ball Sample.

**ADA**

## Codes/Standards
ASME A112.19.2/CSA B45.1
ASME A112.19.19
ADA
ICC/ANSI A117.1

## KOHLER® One-Year Limited Warranty
See website for detailed warranty information.

## Available Color/Finishes
*Color tiles intended for reference only.*

| Color | Code | Description |
|---|---|---|
| | 0 | White |
| | 96 | Biscuit |
| | 47 | Almond |
| | 7 | Black Black™ |

PL-306
Revision Date:

# Steward®
Waterless Urinal
**K-4917**

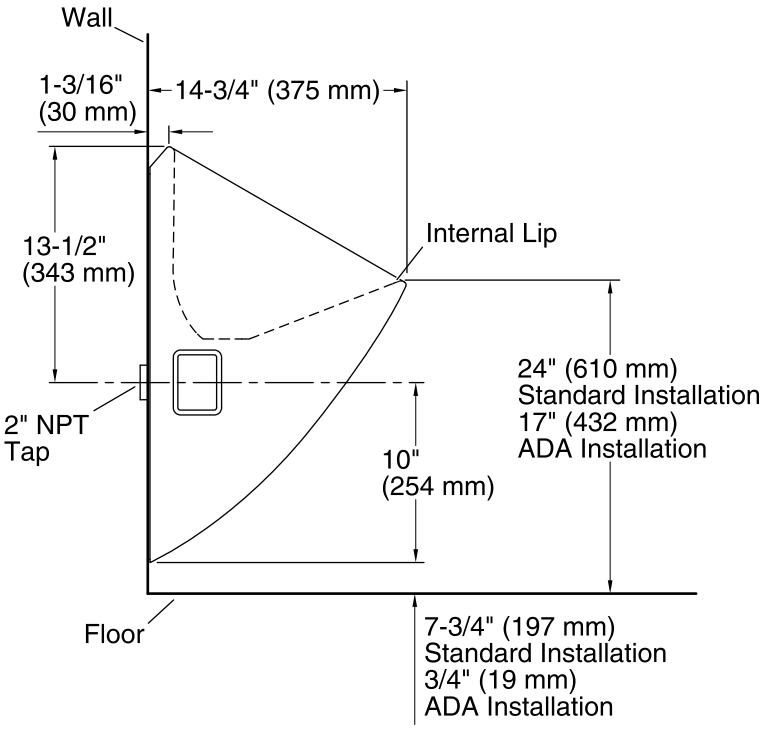


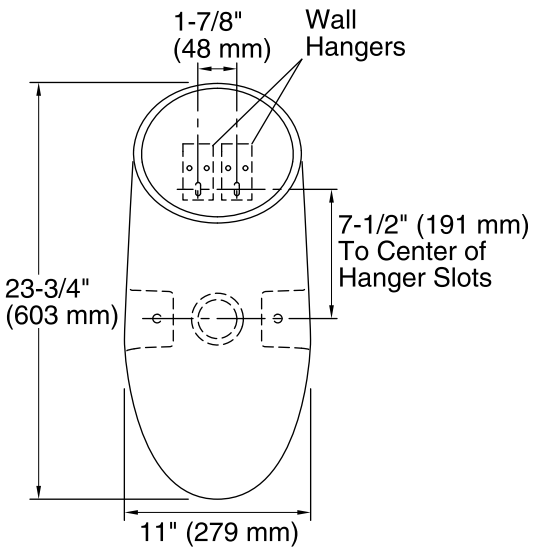


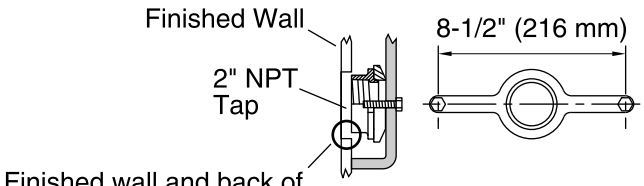


**Spud Detail**

## Technical Information

All product dimensions are nominal.

Spud size: 2", outlet, Rear

## Notes

Install this product according to the installation guide.

Roughing-in remains the same when using the optional 3" outlet spud.

NOTICE: For ADA compliance, measurement must be from the floor to the top of the internal lip.

CAUTION: Risk of property damage. When connecting waterless urinals to the building drain waste vent system, do not use copper pipe or copper tube connectors. The use of a copper connector will result in corrosion of the connector and potential building structure damage caused by leakage.

ADA compliant when installed to the specific requirements of these regulations.

KOHLER®

PL-307
Revision Date:

# Kingston™
Toilet Bowl
**K-4325-L**

## Features
- Vitreous china.
- Elongated bowl.
- Siphon jet.
- Wall-mount.
- With bedpan lugs.
- 1-1/2" top spud.
- 1.28 gpf (4.8 lpf) or 1.6 gpf (6 lpf) depending on flushometer specified.
- 10-1/2" (267 mm) x 9" (229 mm) water area.
- 26-1/2" (673 mm) x 16-1/2" (419 mm) x 13-1/4" (337 mm).
- Will replace K-4330 and K-4330-L bowls.

## Components
Additional included component/s: Spud.

**ADA** | **CSA B651** | **OBC**

WaterSense Meets EPA Criteria Certified by IAPMO R&T

## Codes/Standards
ASME A112.19.2/CSA B45.1
DOE - Energy Policy Act 1992
EPA WaterSense®
California Energy Commission (CEC)
ADA
ICC/ANSI A117.1
CSA B651
OBC

## KOHLER® One-Year Limited Warranty
See website for detailed warranty information.

## Available Color/Finishes
*Color tiles intended for reference only.*

| Color | Code | Description |
|---|---|---|
| | 0 | White |

PL-307
Revision Date:

# Kingston™
Toilet Bowl
**K-4325-L**

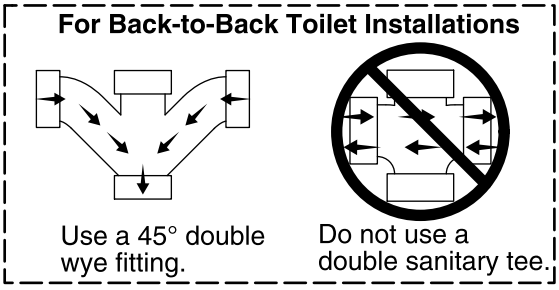


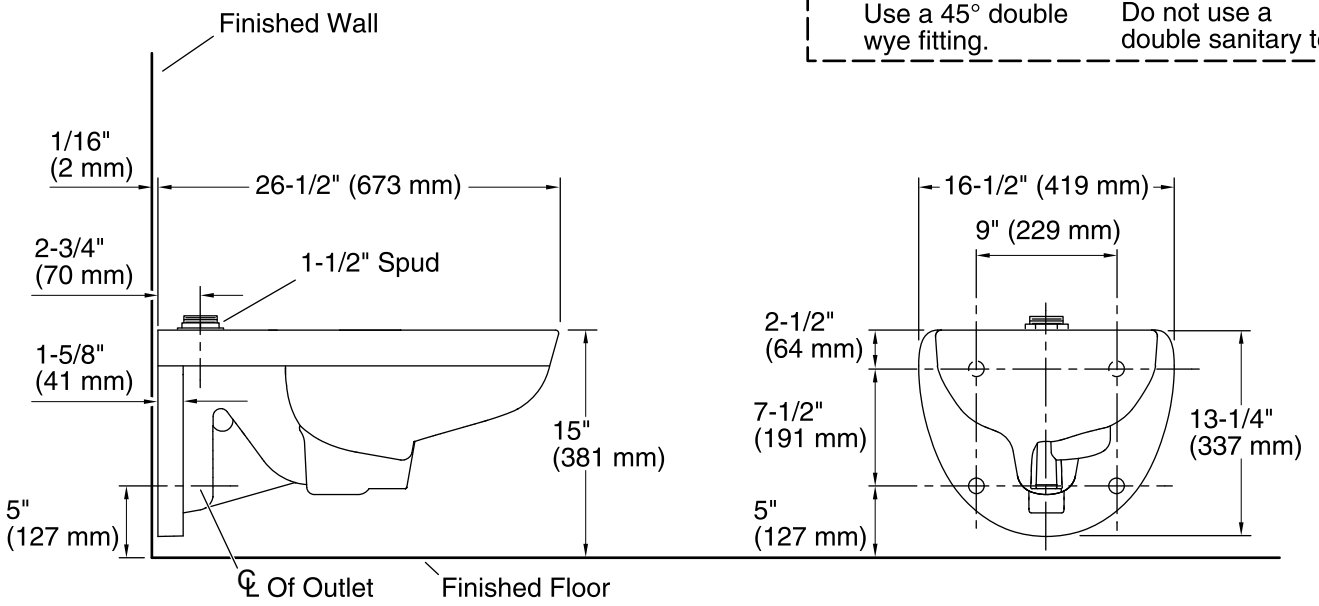


## Technical Information

All product dimensions are nominal.

| | |
|---|---|
| Toilet type: | Flushometer, Wall-mount |
| Waste Outlet: | Wall |
| Bowl shape: | Elongated front |
| Spud size: | 1-1/2", Inlet, Top |
| Trap passageway: | 2-1/8" (54 mm) |
| Water surface size: | 10-1/2" x 9" (267 mm x 229 mm) |
| Rim to water surface: | 5-1/4" (133 mm) |
| Seat-mounting holes: | 5-1/2" (140 mm) |

## Fixture Supply Requirements

| | |
|---|---|
| Min static pressure: | 35 psi (241.3 kPa) |
| Max static pressure: | 80 psi (551.6 kPa) |
| Min flowing pressure: | 25 psi (172.4 kPa) |
| Min flow rate: | 25 gpm (94.6 lpm) |

## Notes

Install this product according to the installation instructions.

Refer to manufacturer's instructions and local codes for flushometer requirements.

For back-to-back toilet installations: Use only a 45° double wye fitting.

ADA, OBC, CSA B651 compliant when installed to the specific requirements of these regulations.

Plumbing codes may require elongated toilets and elongated, open-front seats in public bathrooms.

Accessibility standards may require controls to be located on the open side of the toilet.

PL-308
Revision Date:

KOHLER. Faucets

# Tripoint™ DC 1.28 GPF WC Flushometer
**K-10956-SV**

## Features
- Fixture-mount design.
- Includes 1.5 V AA batteries.

## Material
- Brass construction.

## Technology
- Electronic infrared sensor with TriPoint™ technology for accurate activation.
- Slow-closing piston technology.

## Installation
- Intended for toilet installations with 1-1/2" spud coupling connection.

## Optional Accessories
GP1118986 Flushometer Extension Kit
K-10313 12" Supply Line Sleeve
K-13716 24" Tailpiece

**ADA** | **CSA B651** | **OBC**

## Codes/Standards
ASME A112.18.1/CSA B125.1
CSA B64
ASSE 1037/ASME A112.1037/CSA B125.37
ADA
ICC/ANSI A117.1
CSA B651
OBC

## KOHLER® One-Year Limited Warranty
See website for detailed warranty information.

## Available Color/Finishes
*Color tiles intended for reference only.*

| Color | Code | Description |
|---|---|---|
| | CP | Polished Chrome |

PL-308

Revision Date:

KOHLER. Faucets

# Tripoint™ DC 1.28 GPF WC Flushometer

## K-10956-SV

*10-3/4" (273 mm) minimum with a
6" (152 mm) critical level above the fixture

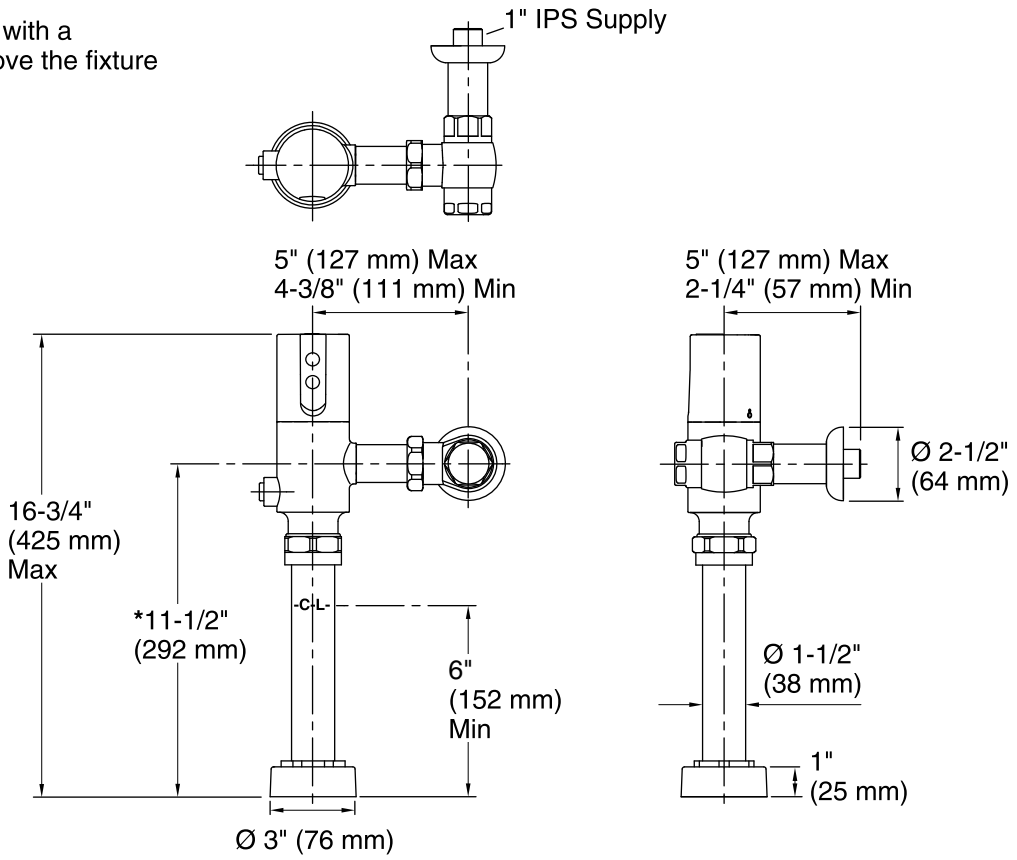


## Technical Information

All product dimensions are nominal.

| | |
|---|---|
| Power source: | Battery - DC, included |
| Fixture pressure max (static): | 80 psi (551.6 kPa) |

## Pressure and Supply Requirements

### Fixture Supply Requirements

| | |
|---|---|
| Max static pressure: | 80 psi (551.6 kPa) |
| Min flowing pressure: | 25 psi (172.4 kPa) |
| Min flow rate: | 25 gpm (94.6 lpm) |

## Notes

Install this product according to the installation guide.

ADA, OBC, CSA B651 compliant when installed to the specific requirements of these regulations.

KOHLER. Faucets

PL-402-KO
Revision Date:

# HydroRail®
Shower Column
**K-45904**

## Features
- For use in bath/shower and shower only installations.
- Designed for new installations or retrofit to replace an existing installed shower arm.
- For use with temperature/volume control mixing valve (not supplied).
- For use with Kohler handshowers and shower hoses.

## Material
- Premium metal construction.
- KOHLER finishes resist corrosion and tarnishing.

## Installation
- Wall-mount
- Installs in less than 60 minutes without changes to in-wall plumbing (subject to condition of existing installation).

## Optional Accessories
K-8593 72" Shower Hose
K-9514 60" Shower Hose
K-45981 Shower Hose
K-45982 Shower Hose
1194630 1/2" NPT Deep Rough-in Kit
1187917 1/2" NPT Shallow Rough-in Kit
1194302 Large Escutcheon/Mounting Collar Kit

**ADA** | **CSA B651**

## Codes/Standards
ASME A112.18.1/CSA B125.1
ADA
ICC/ANSI A117.1
CSA B651

## KOHLER® Faucet Lifetime Limited Warranty
See website for detailed warranty information.

## Available Color/Finishes
*Color tiles intended for reference only.*

| Color | Code | Description |
|---|---|---|
| | CP | Polished Chrome |
| | SN | Vibrant® Polished Nickel |
| | BN | Vibrant® Brushed Nickel |
| | BV | Vibrant® Brushed Bronze |
| | 2BZ | Oil-Rubbed Bronze |

KOHLER. Faucets

PL-402-KO
Revision Date:

# HydroRail®
Shower Column
**K-45904**

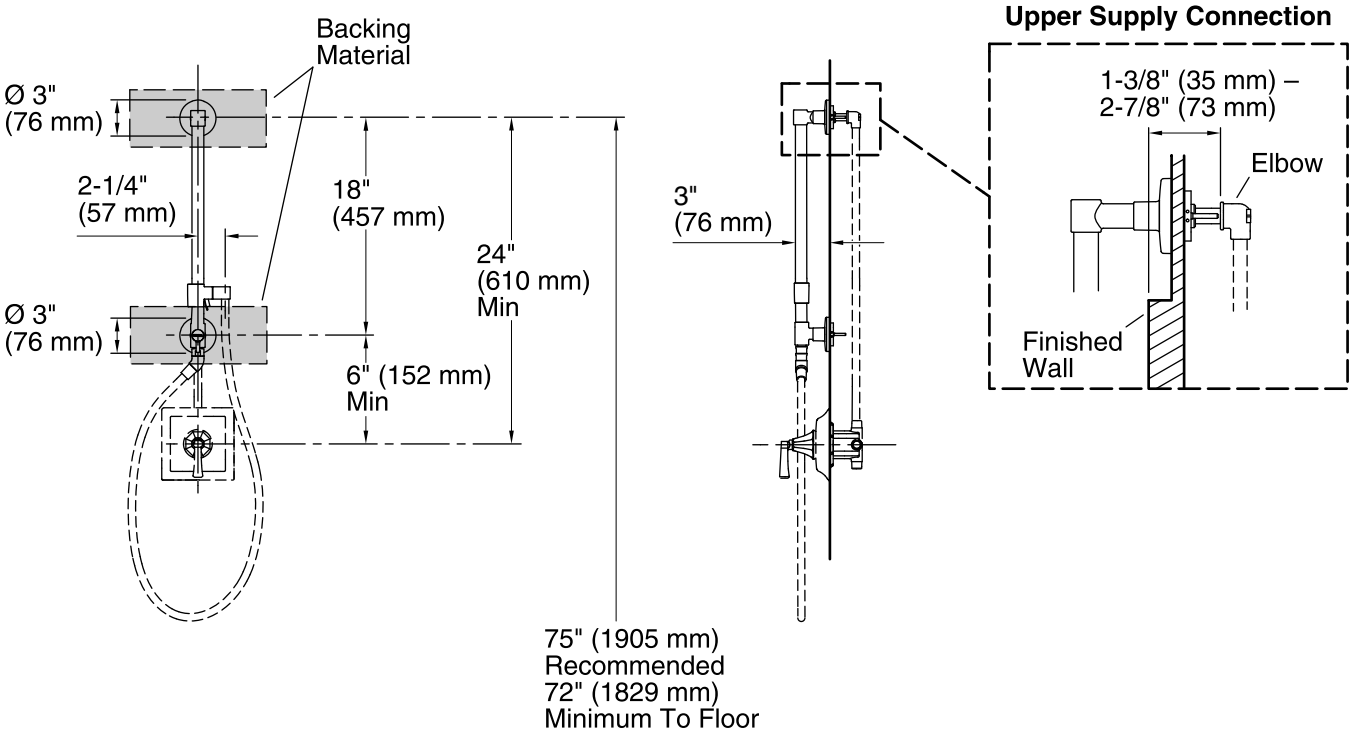


**NOTE:** Valve trim and hose illustrated for dimensioning only, not included in the product.

## Technical Information
All product dimensions are nominal.

## Notes
Install this product according to the installation guide.

Order deep roughing-in kit 1194630 if the distance from the elbow to the finished wall surface is between 2-7/8” (73 mm) to 4” (102 mm).

Order shallow roughing-in kit 1187917 if the distance from the elbow to the finished wall surface is less than 1-3/8” (35 mm).

A 3” (76 mm) escutcheon/mounting collar is supplied to fit a 1” (25 mm) to 1-1/4” (32 mm) supply connection hole diameter. Order 1194302 large escutcheon/mounting collar kit if the supply connection hole diameter is between 1-1/4” (32 mm) to 2-1/4” (57 mm).

ADA, CSA B651 compliant when installed to the specific requirements of these regulations.

KOHLER. Faucets

PL-402-KO
Revision Date:

# Purist®
## Multifunction Handshower
## K-978

### Features
- Adjustable oversized sprayface
- MasterCleanTM sprayface resists hard water buildup and is easy to clean
- Complements Purist® faucet line
- Ergonomic sprayhead pivots
- 1.75 gpm (6.6 L) per minute maximum flow rate
- Wide Coverage, medium coverage, forceful utility spray, and water-saving spray option
- Water–saving spray meets ADA requirement for non-positive shutoff

### Optional Accessories
K-8593 72" Shower Hose
K-9514 60" Shower Hose
K-45981 Shower Hose
K-45982 Shower Hose

WaterSense Meets EPA Criteria Certified by IAPMO R&T

**ADA** | **CSA B651** | **OBC**

### Codes/Standards
ASME A112.18.1/CSA B125.1
All applicable US Federal and State material regulations
DOE - Energy Policy Act 1992
EPA WaterSense®
ADA
ICC/ANSI A117.1
CSA B651
OBC

### KOHLER® Faucet Lifetime Limited Warranty
See website for detailed warranty information.

### Available Color/Finishes
*Color tiles intended for reference only.*

| Color | Code | Description |
|---|---|---|
| | CP | Polished Chrome |
| | BGD | Vibrant® Moderne Brushed Gold |
| | BN | Vibrant® Brushed Nickel |

KOHLER. Faucets

PL-402-KO
Revision Date:

# Purist®
Multifunction Handshower
**K-978**

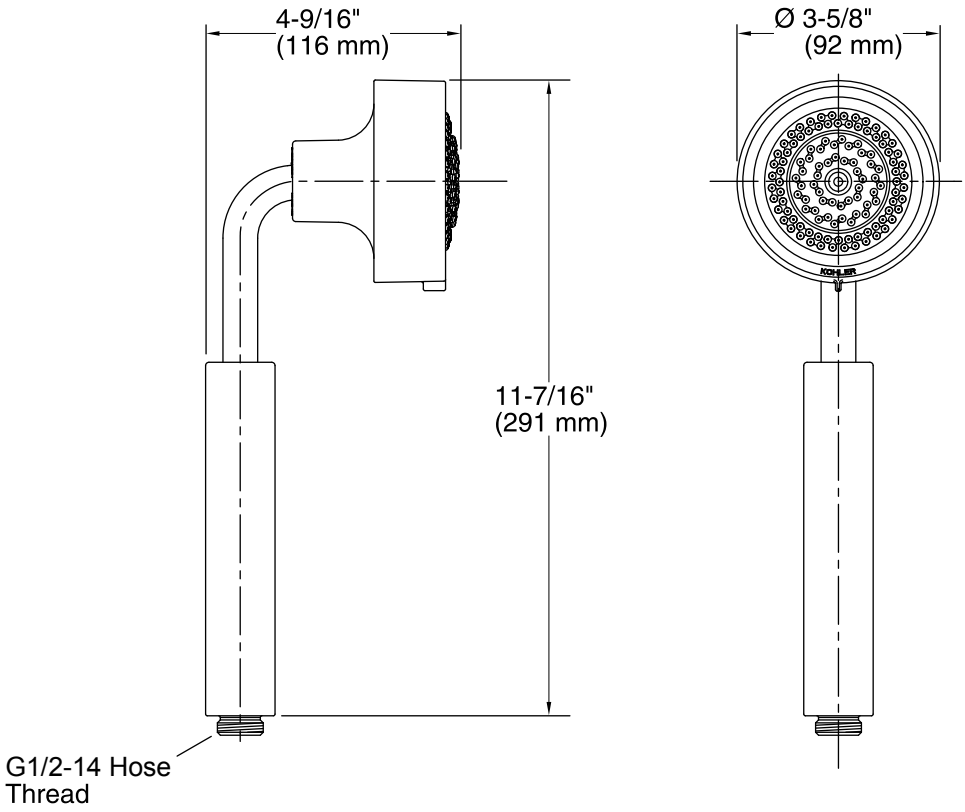


## Technical Information
All product dimensions are nominal.

## Handshower:
Rated maximum flow: 1.75 gal/min (6.6 l/min)

## Notes
Install this product according to the installation guide.

Plumbing codes require approved backflow prevention devices to be installed in-line to handshowers. Please consult with local plumbing officials.

ADA, OBC, CSA B651 compliant when installed to the specific requirements of these regulations.

KOHLER. Faucets

PL-402-KO
Revision Date:

# MasterBath™
## 60" Shower Hose
## K-9514

### Features
- 60-inch hose length.
- Swivel base helps reach target areas.
- For use with a handshower (sold separately).
- KOHLER finishes resist corrosion and tarnishing.

### Material
- Durable metal construction.

### Codes/Standards
None Applicable

### KOHLER® Faucet Lifetime Limited Warranty
See website for detailed warranty information.

### Available Color/Finishes
*Color tiles intended for reference only.*

| Color | Code | Description |
|---|---|---|
| | CP | Polished Chrome |
| | SN | Vibrant® Polished Nickel |
| | AF | Vibrant® French Gold |
| | PB | Vibrant® Polished Brass |
| | BGD | Vibrant® Moderne Brushed Gold |
| | G | Brushed Chrome |
| | BN | Vibrant® Brushed Nickel |
| | BV | Vibrant® Brushed Bronze |
| | 2BZ | Oil-Rubbed Bronze |
| | TT | Vibrant Titanium |
| | VNT | Vintage Nickel |

KOHLER. Faucets

PL-402-KO
Revision Date:

# MasterBath™
60" Shower Hose
**K-9514**

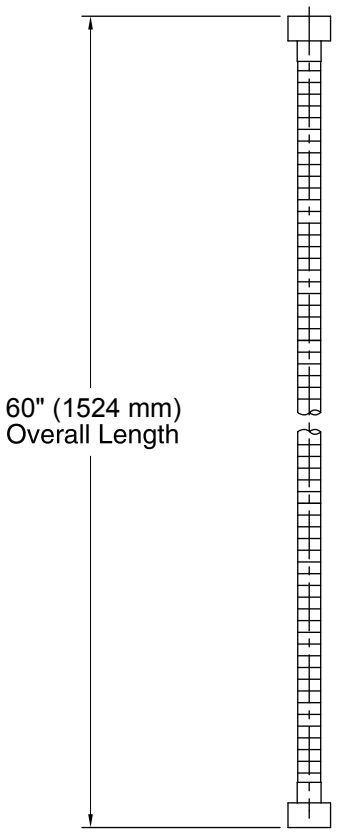


## Technical Information
All product dimensions are nominal.

## Notes
Install this product according to the installation guide.

PL-402-MO

Revision Date:

MOEN

Buy it for looks. Buy it for life.®

# Specifications

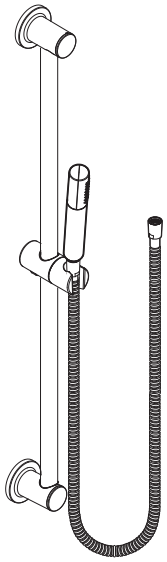

**DESCRIPTION**
- Various finishes identified by suffix
- Handheld shower
- 69" double interlock spiral hose (metal)
- Double check valve in handle
- 30" slide bar with push button height selection

**OPERATION**
- Single function
- Handshower holder rotates to adjust angle of handshower

**FLOW**
- Designed to deliver 2.5 gpm (9.5 L/min) at 80 psi
- EP suffix models are limited to 2.0 gpm (7.6 L/min) at 80 psi
- EP17 suffix models are limited to 1.75 gpm (6.7 L/min) at 80 psi

**STANDARDS**
- Designed and manufactured to comply with the applicable requirements of ASME A112.18.1/CSA B-125.1, ASSE 1014 and all applicable specifications referenced therein

**WARRANTY**
- Limited lifetime warranty against material or manufacturing defects

## LEVEL™
## Single Function Handshower w/Slide Bar

**Model:** 3887 series

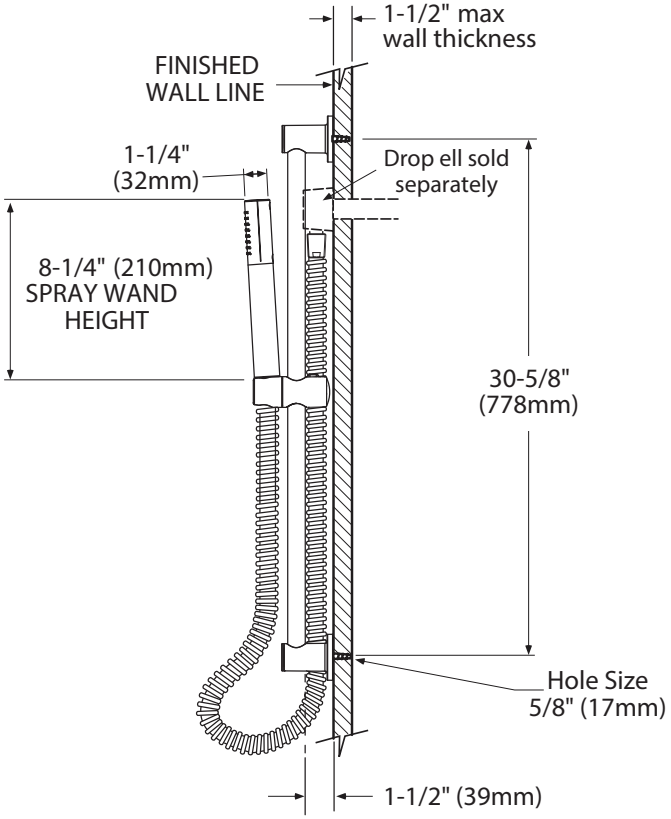


## CRITICAL DIMENSIONS

(DO NOT SCALE)

KOHLER. Faucets

PL-403-KO
Revision Date:

# Awaken® B110
Premium Slidebar Kit
**K-99899-G**

## Features
- Handshower features transitional design
- Three spray modes and ADA non-positive shut off.
- Thumb tab allows for a smooth transition between sprays.
- MasterClean™ sprayface is easy to clean.
- 36-inch slidebar features adjustable mounting brackets for installation flexibility.
- Includes 60-inch metal hose.
- ADA compliant.

## Water Conservation & Rebates
- WaterSense®-labeled 1.75-gpm handshowers use up to 30 percent less water than standard 2.5-gpm handshowers, while still meeting strict performance guidelines.
- This product can help a building earn Water Efficiency points in the LEED® Green Building Rating System.

## Optional Accessories
K-98350 Wall-mount Supply Elbow
K-98351 Wall-mount Supply Elbow with Check Valve

ADA | OBC

## Codes/Standards
ASME A112.18.1/CSA B125.1
DOE - Energy Policy Act 1992
EPA WaterSense®
California Energy Commission (CEC)
ADA
ICC/ANSI A117.1
OBC

## KOHLER® Faucet Lifetime Limited Warranty
See website for detailed warranty information.

## Available Color/Finishes
*Color tiles intended for reference only.*

| Color | Code | Description |
|---|---|---|
| | CP | Polished Chrome |
| | BN | Vibrant® Brushed Nickel |

KOHLER. Faucets

PL-403-KO
Revision Date:

# waken® B110

Premium Slidebar Kit

**K-99899-G**

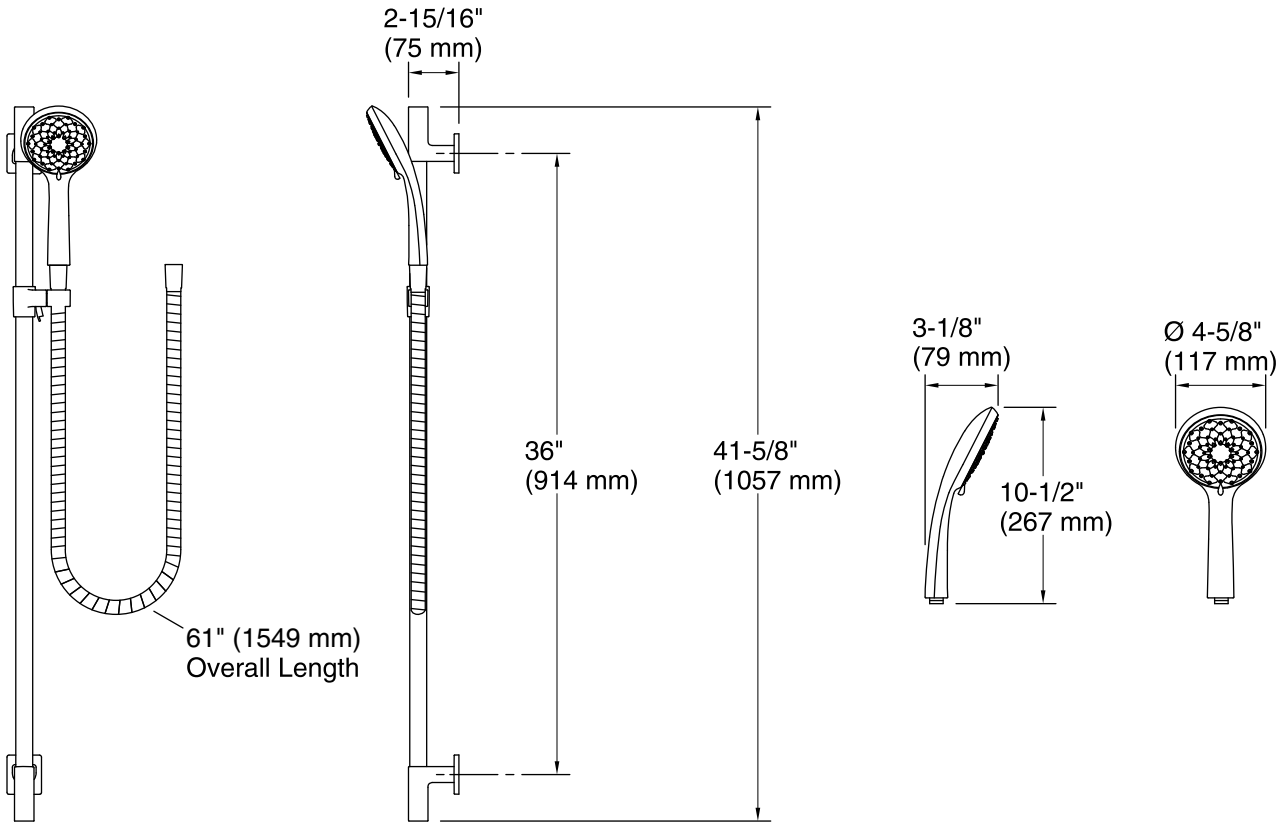


## Technical Information

All product dimensions are nominal.

### Handshower:

Rated maximum flow: 1.75 gal/min (6.6 l/min)

## Notes

Install this product according to the installation instructions.

Plumbing codes require approved backflow prevention devices to be installed in-line to handshowers. Please consult with local plumbing officials.

IMPORTANT! The slidebar must be mounted to stud framing at both the top and bottom mounting locations. Do not use or depend on plastic wall anchors to attach the slidebar.

ADA, OBC compliant when installed to the specific requirements of these regulations.

PL-403-MO

Revision Date:

MOEN

Buy it for looks. Buy it for life.®

# Specifications

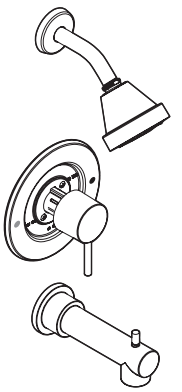

## ALIGN™ POSI-TEMP® Single-Handle Tub/Shower Trim Kit

**Models:** T2191 series - valve trim only
T2192 series - shower trim only
T2193 series - tub/shower trim

**Valves:** 62300 series
2500 series

### FAUCET DESCRIPTION
- Metal construction with various finishes identified by suffix
- Includes showerhead, arm, flange and diverter spout
- Includes red and blue temperature markings

### OPERATION
- Handle operates counterclockwise through a 270˚ arc with off at 6 o'clock and maximum hot at the 9 o'clock position. Shut off in clockwise direction
- Adjustable temperature limit stop to control maximum hot water temperature
- Pressure balancing mechanism maintains selected discharge temperature to ± 3°

### FLOW
- Showerhead is limited to 2.5 gpm (9.5 L/min) at 80 psi
- EP suffix models are limited to 1.75 gpm (6.6 L/min) at 80 psi
- NH suffix models contain no showerhead

### CARTRIDGE
- 1222 cartridge design
- Nonmetallic/nonferrous and stainless steel materials
- Accommodates back to back installations

### STANDARDS
- Third party certified to meet ASME A112.18.1/CSA B125.1 and all applicable requirements referenced therein
- EP suffix models are third party certified to WaterSense®
- **ADA** for lever handle

### WARRANTY
- Lifetime limited warranty against leaks, drips and finish defects to the original homeowner
- 10 year limited warranty when used in a multifamily installation
- 5 year limited warranty when used in a commercial installation

Visit www.moen.com/support for complete details and limitations

WaterSense Meets EPA Criteria
Certified by IAPMO R&T

GREEN UPC ®

**EP Suffix Models Only**

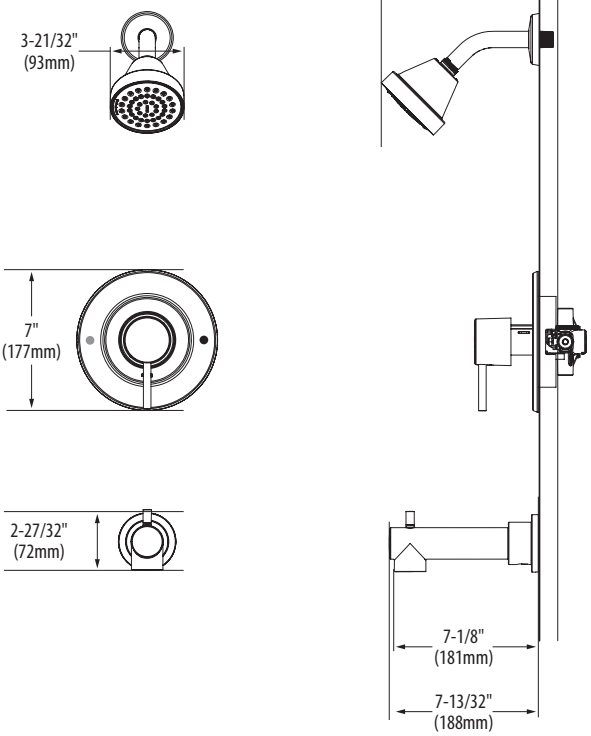


M•pact System

## CRITICAL DIMENSIONS

(DO NOT SCALE)




03/07/2017 SPC1-0.09 300WDS1440
Released01

KOHLER. Faucets

PL-404
Revision Date:

# MasterShower®
## Shower Arm and Flange
## K-7397

### Features
- Metal construction.
- 1/2" -14 NPT thread both ends.
- Wall-mount flange.

### Codes/Standards
None Applicable

### KOHLER® Faucet Lifetime Limited Warranty
See website for detailed warranty information.

### Available Color/Finishes
*Color tiles intended for reference only.*

| Color | Code | Description |
|---|---|---|
| | CP | Polished Chrome |
| | SN | Vibrant® Polished Nickel |
| | AF | Vibrant® French Gold |
| | PB | Vibrant® Polished Brass |
| | BGD | Vibrant® Moderne Brushed Gold |
| | G | Brushed Chrome |
| | BN | Vibrant® Brushed Nickel |
| | BV | Vibrant® Brushed Bronze |
| | 2BZ | Oil-Rubbed Bronze |
| | VNT | Vintage Nickel |

KOHLER. Faucets

PL-404
Revision Date:

# MasterShower®
## Shower Arm and Flange
## K-7397

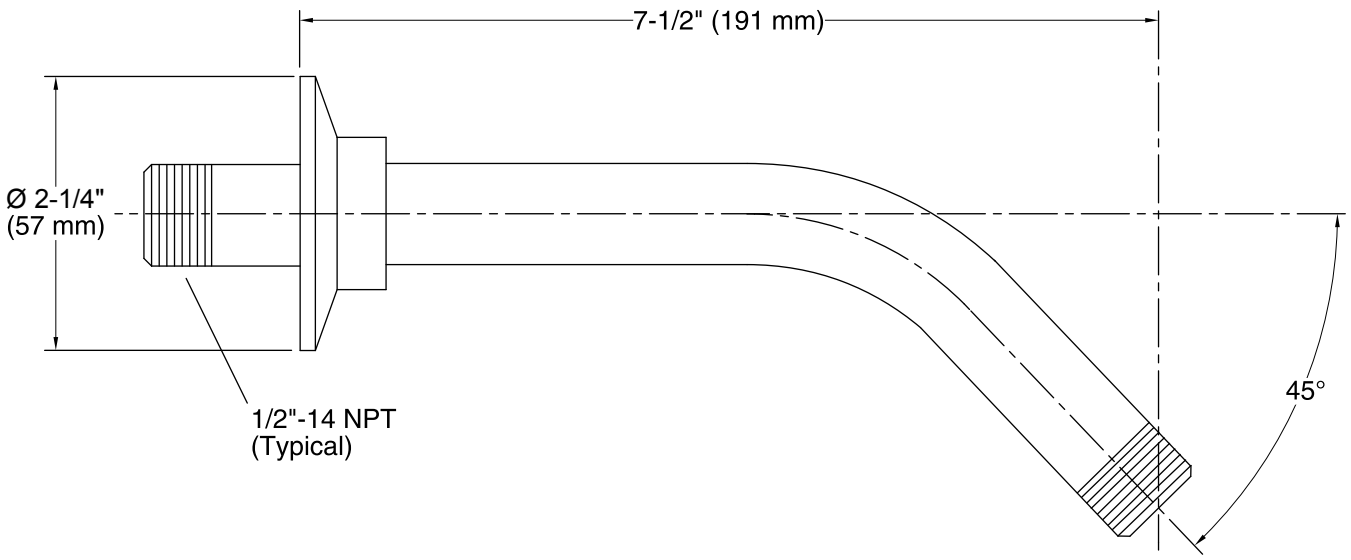


### Technical Information
All product dimensions are nominal.

### Notes
Install this product according to the installation guide.

KOHLER. Faucets

PL-405
Revision Date:

# Clearflo

Clearflo Tile-in Shower Drain
**K-9136**

## Features
- Removable square shaped grid plate.
- Reversible collar to accommodate a variety of tile thicknesses.
- 2" and 3" PVC connection.

## Material
- Brass and PVC construction.
- KOHLER finishes resist corrosion and tarnishing.

## Installation
- Through-the-floor tile-in installation.

## Codes/Standards
ASME A112.18.2/CSA B125.2

## KOHLER® Faucet Lifetime Limited Warranty
See website for detailed warranty information.

## Available Color/Finishes
*Color tiles intended for reference only.*

| Color | Code | Description |
|---|---|---|
| | CP | Polished Chrome |
| | SN | Vibrant® Polished Nickel |
| | AF | Vibrant® French Gold |
| | PB | Vibrant® Polished Brass |
| | BGD | Vibrant® Moderne Brushed Gold |
| | G | Brushed Chrome |
| | BN | Vibrant® Brushed Nickel |
| | BV | Vibrant® Brushed Bronze |
| | 2BZ | Oil-Rubbed Bronze |
| | BL | Matte Black |
| | RGD | Vibrant Rose Gold |
| | TT | Titanium |
| | VNT | Vintage Nickel |

KOHLER. Faucets

PL-405

Revision Date:

# Clearflo

Clearflo Tile-in Shower Drain

**K-9136**

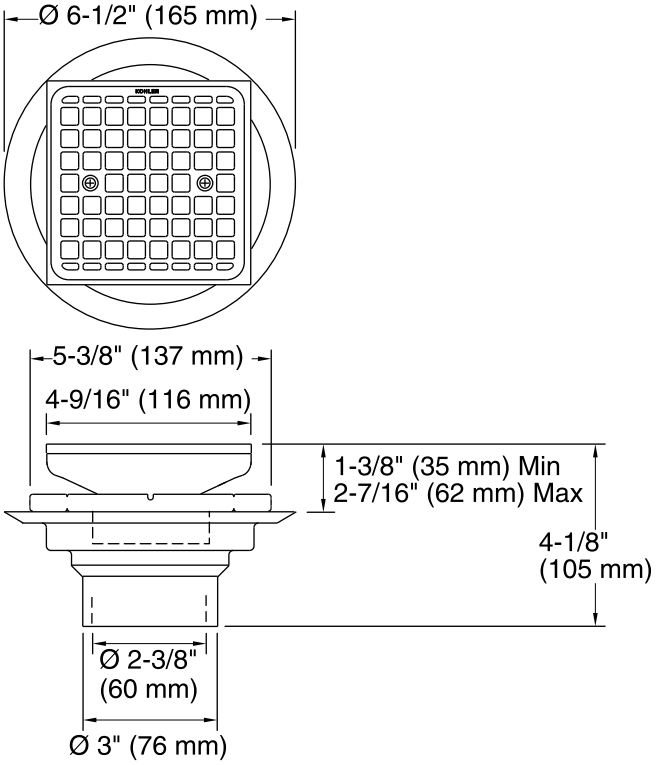


**Collar with Threads Facing Down**

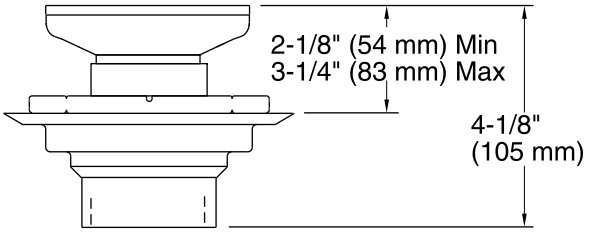


**Collar with Threads Facing Up**

## Technical Information

All product dimensions are nominal.

## Notes

Install this product according to the installation instructions.

KOHLER. Faucets

PL-803-KO
Revision Date:

# Rite-Temp®
## Valve Body & Cartridge Kit Complete
## K-8304-KS

### Features
- Includes valve body, pressure balance cartridge, rough-in guide and mud guard
- 1/2" Universal NPT & direct sweat inlets & outlets, with stops
- Service stops include integral check valves
- 5.0 gpm (18.9 l/min) maximum flow rate at 45 psi
- Single lever design cycles from off through cold to hot
- Provides temperature regulation and automatic anti-scald protection
- One piece cartridge design simplifies installation and maintenance
- Adjustable high temperature limit stop to control maximum water temperature
- Requires valve trim to complete installation (sold separately).

### Material
- Forged De-zincification Resistant Brass body provides long term reliability and resistance to aggressive water conditions

### Technology
- Pressure-balancing diaphragm technology maintains outlet temperature within +/- 3 degrees Fahrenheit during water pressure fluctuations

### Installation
- Designed for use in standard, back to back and thin wall installations
- Valve body features integral mounting locations and symmetrical valve inlets to simplify installation
- Cartridge is reversible for installations where hot and cold supplies are reversed.
- Rough-in guide designed for both standard and thin wall installations
- Installed valve rough-in can be flushed and pressure tested to 150psi max (air or water) without cartridge, using K-10351 Test Cap

### Optional Accessories
K-10350 Deep Rough-In Kit For K-8305 Cartridges
K-10351 Test Cap For K-8300 Series Valve Bodies

### Codes/Standards
ASME A112.18.1/CSA B125.1
ASSE 1016/ASME A112.1016/CSA B125.16

### KOHLER® Faucet Lifetime Limited Warranty
See website for detailed warranty information.

KOHLER. Faucets

PL-803-KO
Revision Date:

# Rite-Temp®
## Valve Body & Cartridge Kit Complete
## K-8304-KS

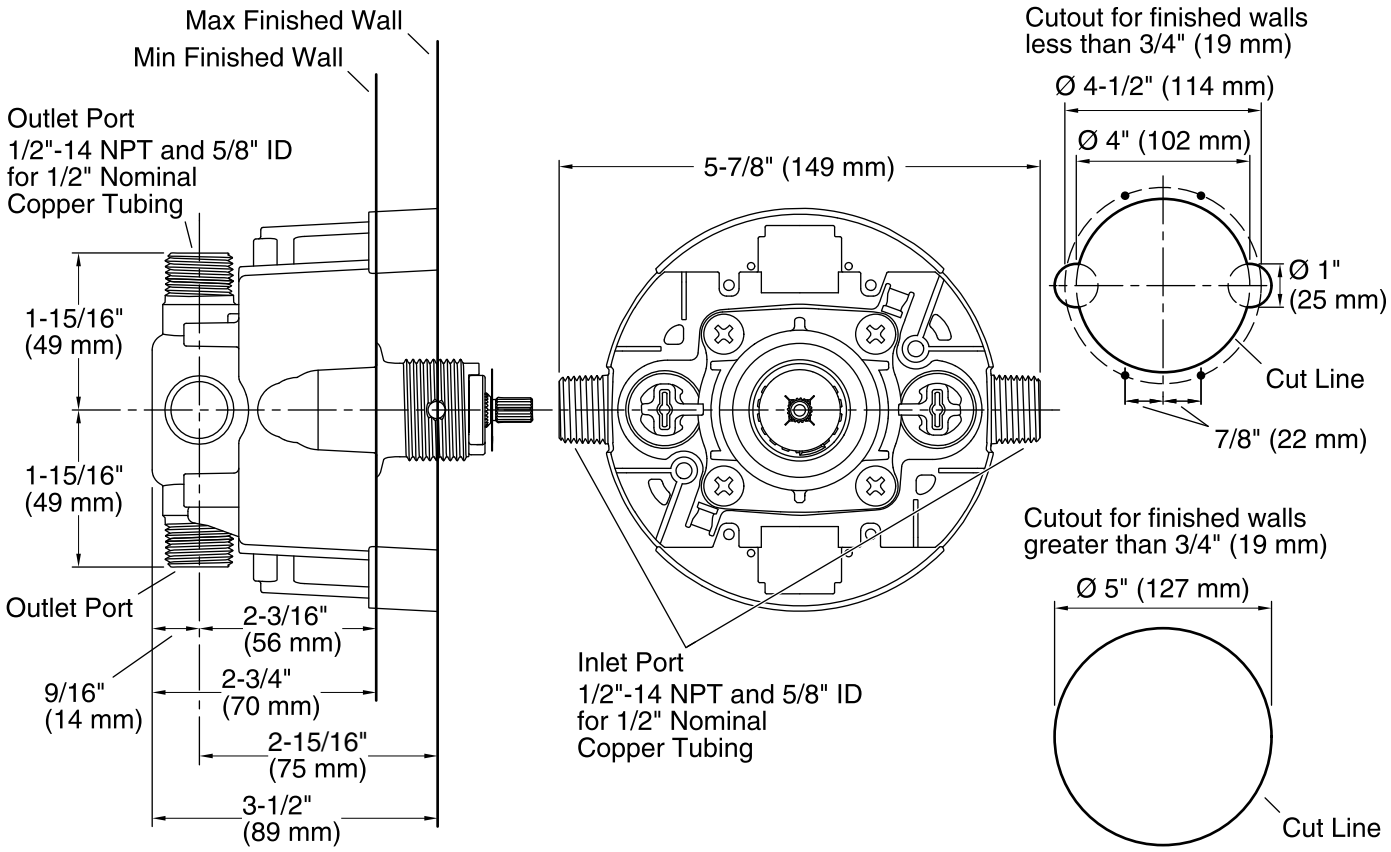


### Technical Information
All product dimensions are nominal.

### Shower Valve:

| | |
|---|---|
| Min. pressure IN: | 20 psi (1.4 bar) |
| Valve body: | Machined-brass |

### Notes
Install this product according to the installation guide.

Avoid cross-flow conditions. Do not install shut-off device on either valve outlet.

Cap the shower outlet if deck-mount spout, diverter, or handshower is connected to the spout outlet.

Install straight pipe or tube drop of 7" (178 mm) to 18" (457 mm) with single elbow between the valve and wall-mount spout.

For finished walls greater than 3/4" (19 mm) and less than 1-1/2" (38 mm), install support(s) 2" (51 mm) from the stud face.

For finished walls greater than 1-1/2" (38 mm), install support(s) 3" (76 mm) from the face of the finished wall.

PL-803-MO

Revision Date:

MOEN

Buy it for looks. Buy it for life.®

# Specifications

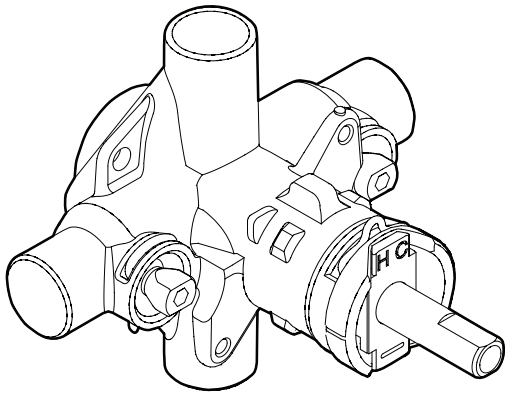

**POSI-TEMP® VALVE**
**Pressure-Balancing Valve with 1/4 Turn Stops**

**Single Pack**
**Models:** 2570 (CC), 2590 (IPS), 2580 (PEX)

**Bulk Packed**
**Models**: 62370 (CC), 62390 (IPS)
**(Bulk packed 12 per carton)**

**DESCRIPTION**
- Brass construction
- 1/2" CC, IPS, or PEX connections with 1/4 turn stops
- Pressure balancing, four port, cycle valve

**OPERATION**
- Adjustable temperature limit stop to control maximum hot water temperature
- Pressure balancing mechanism maintain selected discharge temperature to ± 3°F

**CARTRIDGE**
- 1222 cartridge design
- Nonmetallic/nonferrous and stainless steel materials
- Accommodates back to back installations

**STANDARDS**
- Third party certified to meet CSA B125.1, ASME A112.18.1, ASSE 1016, and all applicable requirements referenced therein
- Moen's Posi-Temp® and Moentrol® valves with graphite composite spools combined with Moen's Eco-performance showerheads meet the performance requirements of pressure and temperature variation of ASSE1016 when tested as low as 1.5 gpm

**WARRANTY**
- Lifetime limited warranty against leaks, drips and finish defects to the original consumer purchaser
- 5 year warranty if used in commercial installations

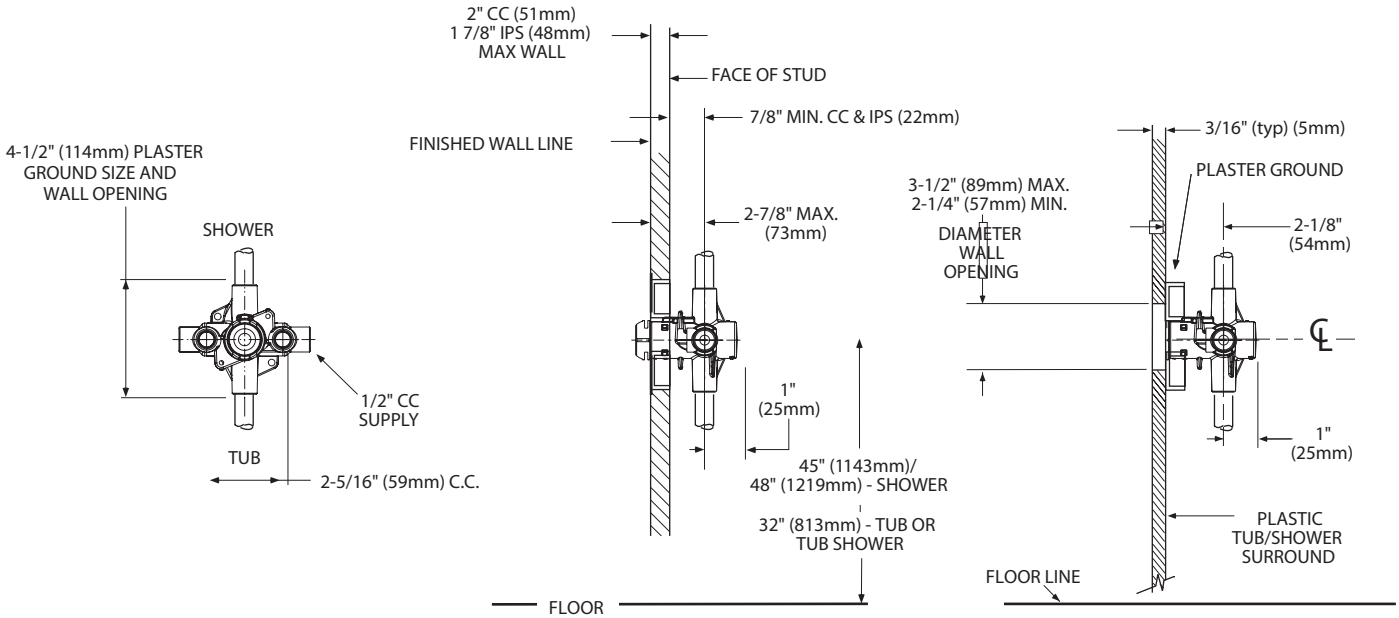


## CRITICAL DIMENSIONS

(DO NOT SCALE)




07/20/2016 SPC1016L 3000016969
Released

KOHLER. Faucets

PL-804-KO
Revision Date:

# Composed®
Rite-Temp® Valve Trim
**K-TS73115-4**

## Features
- Includes face plate with handle.
- Single handle controls both on/off activation and temperature setting.
- Supplied with ADA compliant metal lever handle.
- Complements the Composed faucet and accessory collections.

## Material
- Premium material construction with metal handle ensures reliability and durability.
- KOHLER finishes resist corrosion and tarnishing, exceeding industry durability standards.

## Installation
- Trim set requires valve to complete installation.

## Required Accessories
K-304/K-P304 Series Rite-Temp® Valves
**or**
K-8304/K-P8304 Series Rite-Temp® Valve & Cartridge Kits
**or**
K-8300/K-P8300 Series Rite-Temp® Valve Body Rough-ins
K-8305/K-P8305 Series Rite-Temp® Cartridges
**or**
K-2971-KS 3/4" Pressure-balancing Valve

## Optional Accessories
K-10350 Deep Rough-In Kit For K-8305 Cartridges
K-10351 Test Cap For K-8300 Series Valve Bodies

**ADA** | **CSA B651** | **OBC**

## Codes/Standards
ASME A112.18.1/CSA B125.1
ADA
ICC/ANSI A117.1
CSA B651
OBC

## KOHLER® Faucet Lifetime Limited Warranty
See website for detailed warranty information.

## Available Color/Finishes
*Color tiles intended for reference only.*

| Color | Code | Description |
|---|---|---|
| | CP | Polished Chrome |
| | TT | Titanium |

KOHLER. Faucets

PL-804-KO

Revision Date:

# Composed®

Rite-Temp® Valve Trim

**K-TS73115-4**

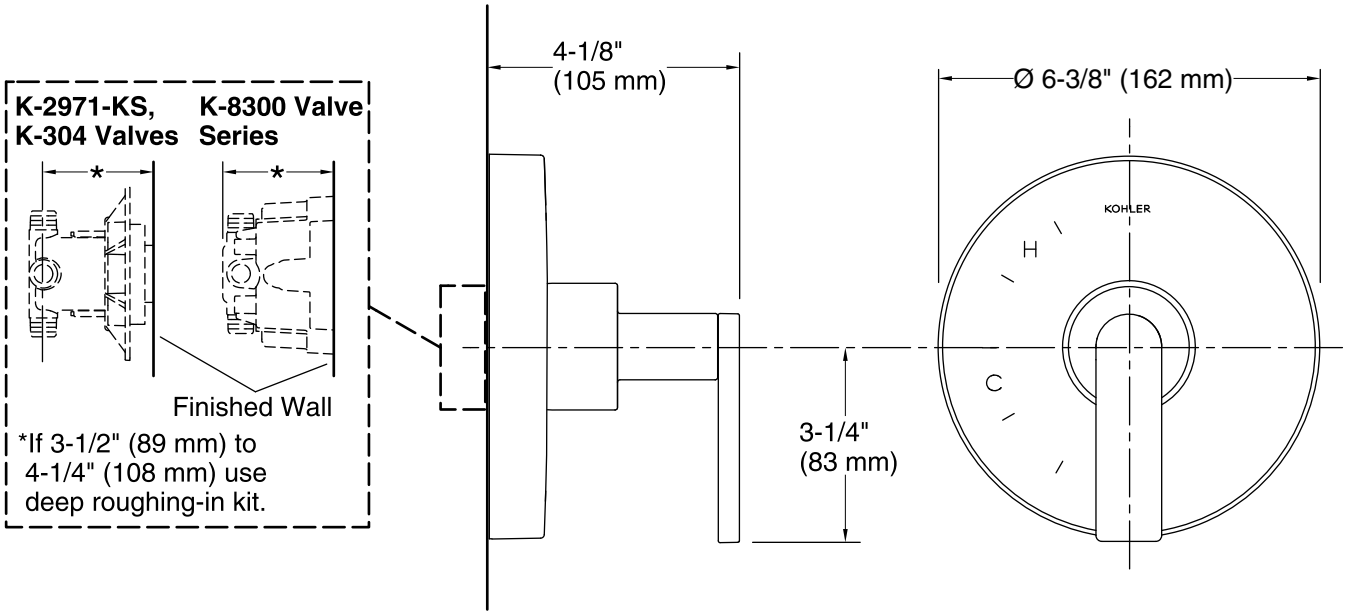


## Technical Information

All product dimensions are nominal.

## Notes

Install this product according to the installation guide.

NOTICE: Risk of product damage. Long screws, for installing trim, can damage the K-2971-KS valve. Consult the trim installation guide to verify if the thin wall installation kit (88526) is needed.

ADA, OBC, CSA B651 compliant when installed to the specific requirements of these regulations.

PL-804-MO

Revision Date:

MOEN

Buy it for looks. Buy it for life.®

# Specifications

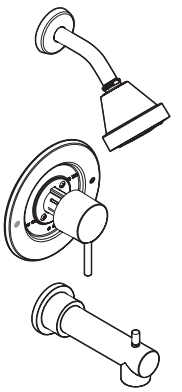

## ALIGN™ POSI-TEMP® Single-Handle Tub/Shower Trim Kit

**Models:** T2191 series - valve trim only
T2192 series - shower trim only
T2193 series - tub/shower trim

**Valves:** 62300 series
2500 series

### FAUCET DESCRIPTION
- Metal construction with various finishes identified by suffix
- Includes showerhead, arm, flange and diverter spout
- Includes red and blue temperature markings

### OPERATION
- Handle operates counterclockwise through a 270˚ arc with off at 6 o'clock and maximum hot at the 9 o'clock position. Shut off in clockwise direction
- Adjustable temperature limit stop to control maximum hot water temperature
- Pressure balancing mechanism maintains selected discharge temperature to ± 3°

### FLOW
- Showerhead is limited to 2.5 gpm (9.5 L/min) at 80 psi
- EP suffix models are limited to 1.75 gpm (6.6 L/min) at 80 psi
- NH suffix models contain no showerhead

### CARTRIDGE
- 1222 cartridge design
- Nonmetallic/nonferrous and stainless steel materials
- Accommodates back to back installations

### STANDARDS
- Third party certified to meet ASME A112.18.1/CSA B125.1 and all applicable requirements referenced therein
- EP suffix models are third party certified to WaterSense®
- **ADA** for lever handle

### WARRANTY
- Lifetime limited warranty against leaks, drips and finish defects to the original homeowner
- 10 year limited warranty when used in a multifamily installation
- 5 year limited warranty when used in a commercial installation

Visit www.moen.com/support for complete details and limitations

WaterSense Meets EPA Criteria
Certified by IAPMO R&T

GREEN UPC ®

**EP Suffix Models Only**

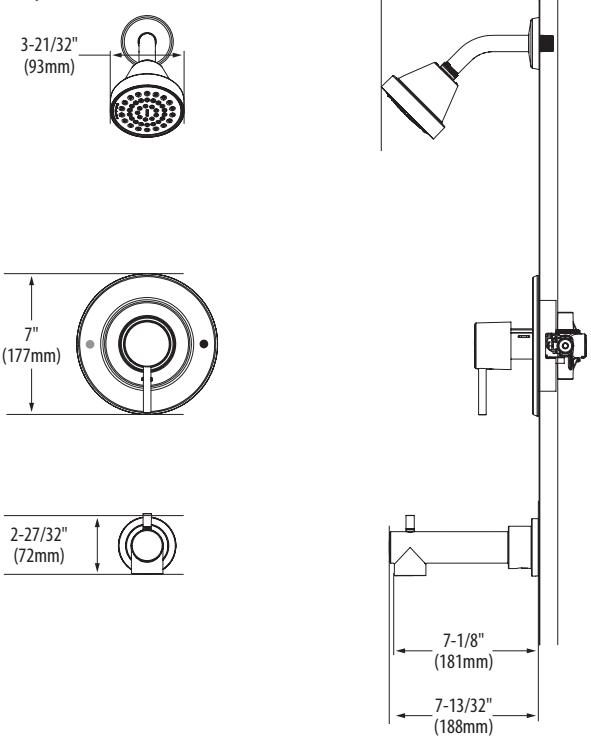


M•pact System

## CRITICAL DIMENSIONS
(DO NOT SCALE)




03/27/2017 SCP1 (ON) 3000000419450
Blackpool01

PL-805

Revision Date:

KOHLER. Faucets

# Wall-mount Valve for Touchless Faucets

**K-11830**

## Features

- Powered by the 30-year hybrid energy system.
- Required for Purist® and Falling Water® wall-mount Touchless faucets.
- 0.5 gal/min (1.9 l/min) flow rate.
- 30 second maximum cycle time.
- Ideal for use with KOHLER Vessels.
- Low-lead (SDWA) compliant

## Material

- Brass construction.

## Technology

- Insight™ adaptive infrared technology.
- Includes one 3.6V size C Hybrid energy cell.

## Installation

- Adjustable sensor/spout distance.
- Easy installation. Hybrid battery powered.It does not require AC connection.

**ADA** | **CSA B651** | **OBC**

## Codes/Standards

ASME A112.18.1/CSA B125.1
NSF/ANSI 372
ADA
ICC/ANSI A117.1
CSA B651
OBC

## KOHLER® Faucet Lifetime Limited Warranty

See website for detailed warranty information.

PL-805

Revision Date:

KOHLER. Faucets

# Wall-mount Valve for Touchless Faucets

## K-11830

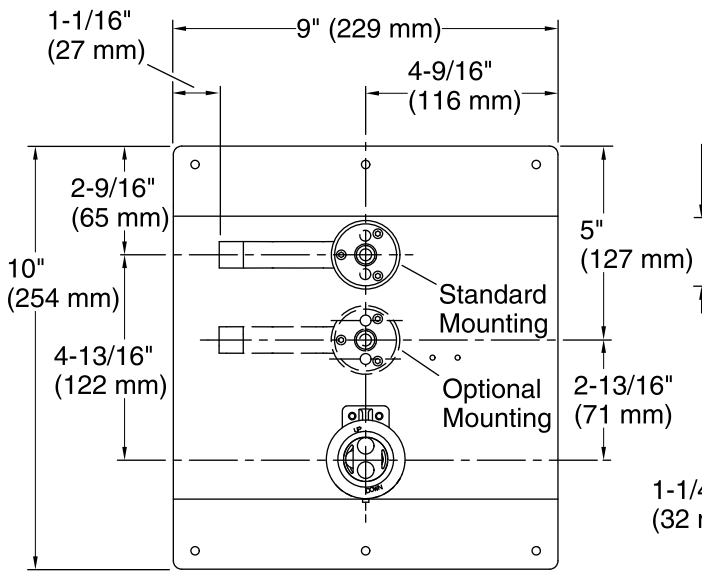


**Valve Mounting Plate**

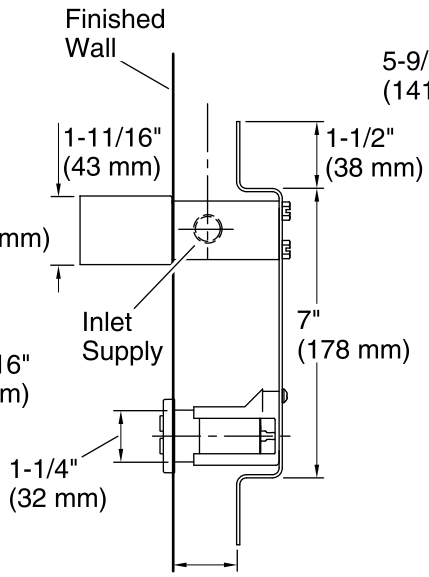


**Valve Control Box**

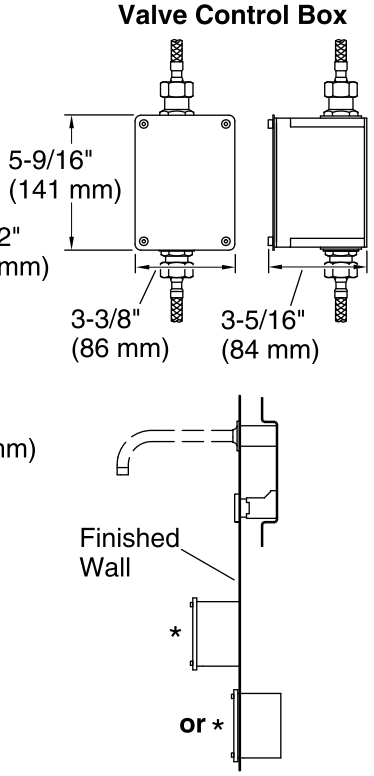


***Valve Control Box Mounting Options**

## Technical Information

All product dimensions are nominal.

| | |
|---|---|
| Power source: | Hybrid Energy Cell, included |

### Faucet:

| | |
|---|---|
| Flow rate: | 0.5 gal/min (1.9 l/min) |
| Pressure: | 45 psi (3.1 bar) |
| Valve body: | Cast brass |

## Notes

Install this product according to the installation guide.

Reference the installation instructions for specific framing information.

Standard mounting for use with faucet trim: K-T11836, K-T11839, K-T11840, and K-T11841.

Standard or Optional mounting for use with faucet trim: K-T11837 and K-T11838.

ADA, OBC, CSA B651 compliant when installed to the specific requirements of these regulations.

KOHLER. Faucets

PL-806
Revision Date:

# Awaken®
## Wall-mount Supply Elbow with Check Valve
## K-98351

### Features
- For use with a handshower and hose (sold separately).
- Coordinates with Awaken showerheads, handshowers and showering accessories.
- Easy installation using slip fit connection.
- Includes check valve.

### Material
- Metal construction.
- KOHLER finishes resist corrosion and tarnishing.

### Installation
- Wall-mount

### Components
Additional included component/s: supply adapter kit (1218069).

### Codes/Standards
ASME A112.18.1/CSA B125.1
ASSE 1014

### KOHLER® Faucet Lifetime Limited Warranty
See website for detailed warranty information.

### Available Color/Finishes
*Color tiles intended for reference only.*

| Color | Code | Description |
|---|---|---|
| | CP | Polished Chrome |
| | BN | Vibrant® Brushed Nickel |
| | 2BZ | Oil-Rubbed Bronze |

KOHLER. Faucets

PL-806
Revision Date:

# Awaken®
## Wall-mount Supply Elbow with Check Valve
## K-98351

| Supply Adapter | A |
|---|---|
| 1218069 (included) | 1-13/16" – 2-5/16" (46 mm – 59 mm) |
| 1229031* | 0 – 1/2" (0 – 13 mm) |
| 1247986* | 5/16" – 13/16" (8 mm – 21 mm) |
| 1247985* | 13/16" – 1-5/16" (21 mm – 33 mm) |
| 1247984* | 1-5/16" – 1-13/16" (33 mm – 46 mm) |
| 1218070* | 2-5/16" – 2-13/16" (59 mm – 71 mm) |
| 1218071* | 2-13/16" – 3-5/16" (71 mm – 84 mm) |

*Sold Separately

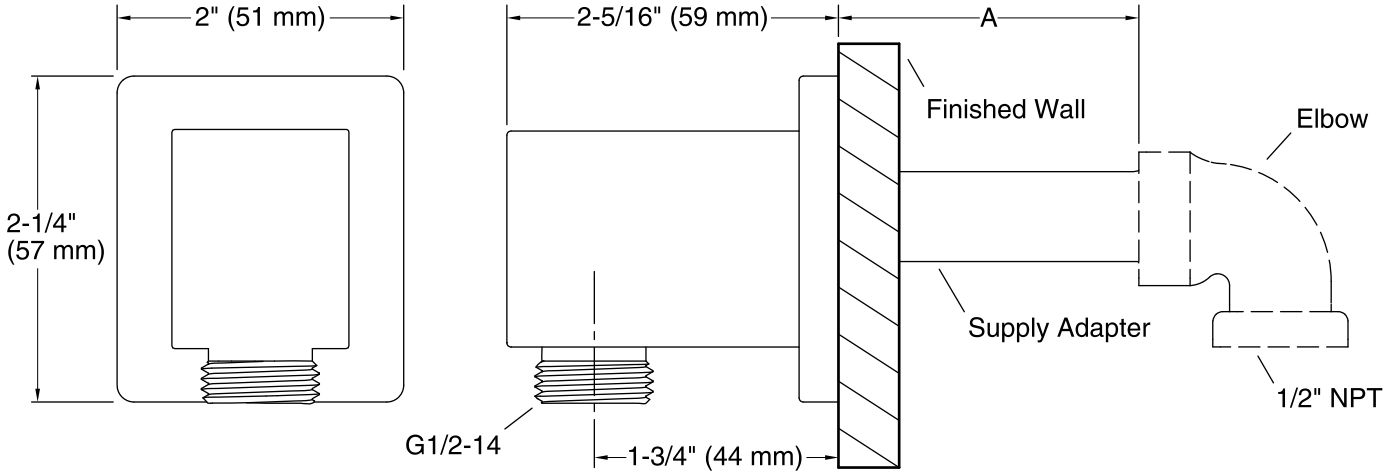


### Technical Information
All product dimensions are nominal.

### Notes
Install this product according to the installation guide.

If dimension "A" is between 1-13/16" (46 mm) and 2-5/16" (59 mm) use the included supply adapter. For the other dimensions, order the appropriate supply adapter.

PARK WAREHOUSE

| PL-900 |
| --- |
| Revision Date: |

Recessed Wall Mounted
Water Bottle Filler Station

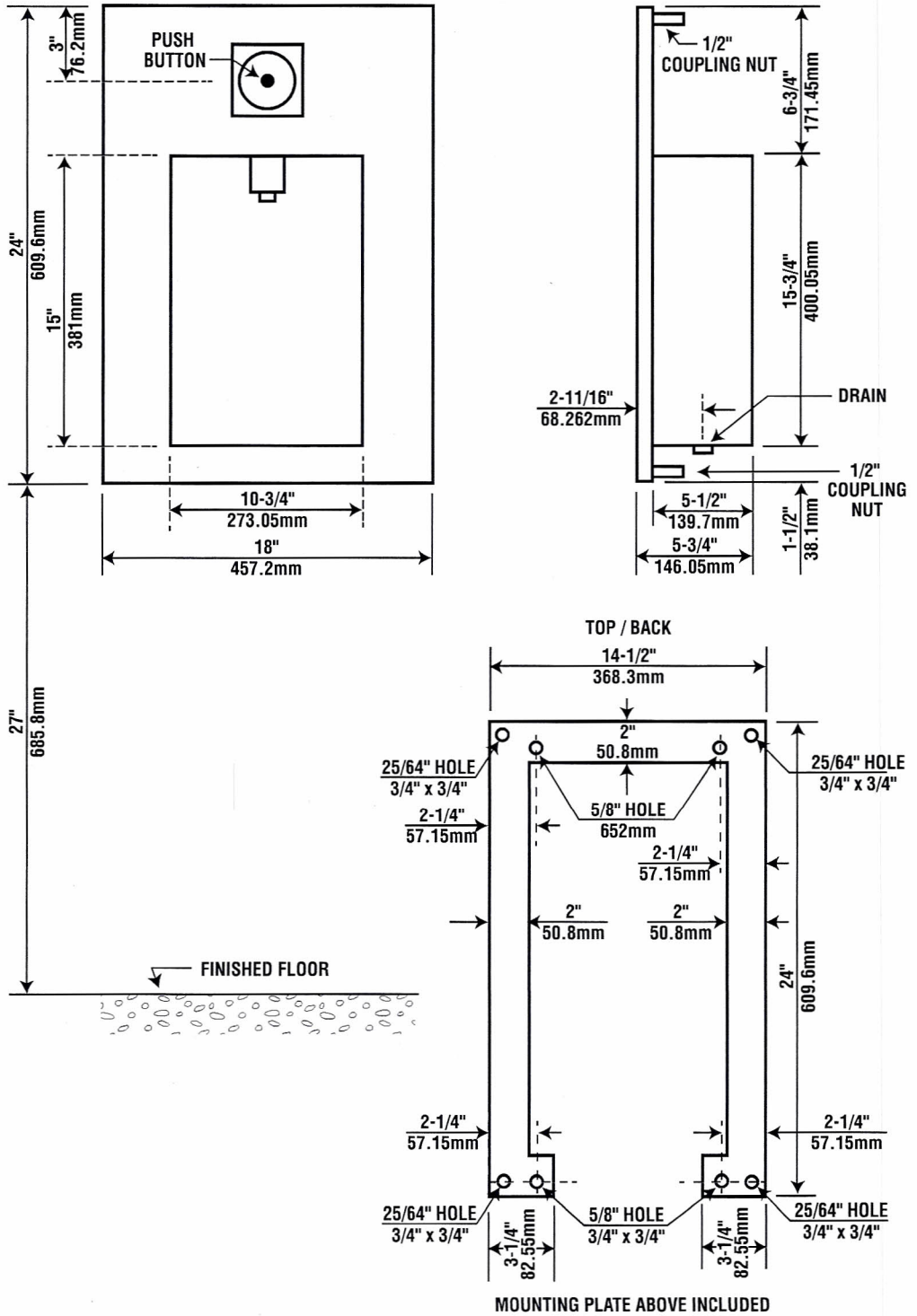


NOTE: THESE ROUGH-IN DIMENSIONS
MAY VARY 1/2: (13 mm) PLUS OR MINUS

PL-901
Revision Date:

## A) Pull-Type Beverage Cup

These Pull-Type Beverage Cup dispensers combine stainless steel quality with universal dispensing of any type of disposable cup. The patented adjustable dispensing collar adjusts to any cup size or material.

- Available in 3 sizes to accommodate 6–46oz (180-1360ml) cups, with rim diameters from 2 7/32" to 4 7/8" (58-123mm).
- Included brackets allow for either wall or dispenser stand mounting.
- Dispenser is top-loaded and gravity fed.

| ITEM NUMBER | CUP SIZE | RIM DIAMETER | TUBE LENGTH | CASE PACK/ WEIGHT |
|---|---|---|---|---|
| C3200P | 6–10oz (180–300ml) | 2 7/32"–3 3/16" (58–80mm) | 23½" (597mm) | 1 2.5lbs(1.1kgs) |
| C3400P | 12–24oz (350–710ml) | 2 3/4"–3 7/8" (70–98mm) | 23½" (597mm) | 1 2.8lbs(1.3kgs) |
| C3500P | 32–46oz (950–1360ml) | 4"–4 7/8" (101–123mm) | 23½" (597mm) | 1 3lbs(1.4kgs) |

**Construction:** 26-gauge 304 stainless

## B) Dispenser Kit & Stand

Dispenser stands are a perfect countertop alternative to organize a variety of wall mount cup and lid dispensers. Dispenser stands are available individually or as a kit with dispensers. Each stand will hold up to four San Jamar cup or lid dispensers in any configuration.

- Allows for high volume dispensing in a small footprint.

| ITEM NUMBER | DISPENSER INCLUDES | DIMENSIONS | CASE PACK/ WEIGHT |
|---|---|---|---|
| C3620 | Kit: C3604, L3402, C3200P, C3400P | 36"h x 12"w x 12"d (914h x 305w x 305d mm) | 1 17.4lbs(7.9kgs) |
| C3604 | Stand only | Base: 10" dia (254mm dia) | 1 7.7lbs(3.5kgs) |

**Construction:** C3604: Chrome-plated steel
C3200P, C3400P: 26-gauge 304 stainless
L3402: 22-gauge 304 stainless

Use C3604 stand with lid dispensers below to hold 4 sleeves of lids in just 10" of space.

## C) Wall Mount Lid Dispensers

Wall Mount Lid Dispensers are ideal for any environment where disposable lids are used. Designed for fast loading, these dispensers will keep your cup lids clean and organized.

- Available in 3 sizes for cup lids ranging from 6–46oz (180-1360ml).
- Available in single and double lid designs, front-loading provides easy and smooth access to lids.
- Brackets allow for either wall or dispenser stand mounting.

| ITEM NUMBER | CAPACITY | LID SIZE | TUBE LENGTH | CASE PACK/ WEIGHT |
|---|---|---|---|---|
| L3200 | 1 sleeve | 6-10oz (180-300ml) | 23½" (597mm) | 1 2.7lbs(1.2kgs) |
| L3400 | 1 sleeve | 12-24oz (350-710ml) | 23½" (597mm) | 1 3.5lbs(1.6kgs) |
| L3500 | 1 sleeve | 32-46oz (950-1360ml) | 23½" (597mm) | 1 4lbs(1.8kgs) |
| L3402 (double lid) | 1 sleeve | 6-24oz (180-710ml) | 23½" (597mm) | 1 2.8lbs(1.3kgs) |
| L3502 (double lid) | 1 sleeve | 24-46oz (710-1360ml) | 23½" (597mm) | 1 3.5lbs(1.6kgs) |

**Construction:** 22-gauge 304 stainless

SAN JAMAR Smart ◆ Safe ◆ Sanitary

Operable Partition

Issue Date: 28 JUL 2017

Revision Date: 29 JAN 2018

| | |
|---|---|
| Item Name | Operable Partition |
| Description: | Operable partition at Tactic / extended meeting room(s) |
| Manufacturer: | Hufcor |
| Product: | 600 Series |
| Dimensions: | Refer to drawings |
| Color / Finish: | Solid grey textured wallcovering to match Tactic Meeting Room wallcovering and extended meeting room wallcovering |
| Lead Time: | To be verified |
| Warranty: | 2-Year warranty against defects in material and workmanship, excluding abuse. |
| Eco-Feature(s) *as per manufacturer: | Material Post-Consumer Recycled Content Volatile Organic Compounds (VOC) |
| Note: | Optional partition at extended meeting spaces |
| STC Performace | Base of 52 STC |

For General Reference Only

## SPECIAL INSTRUCTIONS

MANUFACTURER

Hufcor 608-756-1241

Scott Staedter 800-356-6968 sstaedter@hufcor.com

ALTERNATE MANUFACTURER 1

ALTERNATE MANUFACTURER 2

ALTERNATE MANUFACTURER 3

AREAS

# Toilet Partitions

Issue Date: 28 JUL 2017

Revision Date:

| | |
|---|---|
| Item Name | Metal Partition and Door |
| Description: | Stainless steel toilet enclosure |
| Manufacturer: | Metpar |
| Product: | FT-700E (Flour mounted / privacy style - Based on textured 5-SM pattern) |
| Dimensions: | (VIF) Verify in Field<br>*Based on the privacy model that includes 64" high doors and panels<br>*Drawing details provided indicate standard heights |
| Material: | Stainless steel #301/304 |
| Finish: | #4 |
| Hardware: | Hardware: S/S wraparound<br>Brackets: S/S stirrup brackets |
| Lead Time: | Standard lead times are 4-5 weeks upon receipt of Purchase Order, Verified Field Measurements and Deposit. Lead times are typical and should be verified by the manufacturer. |
| Warranty: | One-Year limited warranty from the date of purchase when materials are used in a normal application and property installed, used and serviced. This warranty is limited to the repair and/or exchange of defective material and does not include field labor charges. |

## SPECIAL INSTRUCTIONS

MANUFACTURER

Metpar Corporation 516-333-2600

Brian Pechar (516)333-2600 BrianP@metpar.com

ALTERNATE MANUFACTURER 1

ALTERNATE MANUFACTURER 2

ALTERNATE MANUFACTURER 3

AREAS

Public Space

Public Restroom - Women's (w/c)

Issue Date: 28 JUL 2017

Revision Date:

| | |
|---|---|
| Item Name | Metal Partition and Door |
| Description: | Stainless steel toilet enclosure |
| Manufacturer: | Metpar |
| Product: | FT-700E (Flour mounted / privacy style - Based on textured 5-SM pattern) |
| Dimensions: | (VIF) Verify in Field<br>*Based on the privacy model that includes 64" high doors and panels<br>*Drawing details provided indicate standard heights |
| Material: | Stainless steel #301/304 |
| Finish: | #4 |
| Hardware: | Hardware: S/S wraparound<br>Brackets: S/S stirrup brackets |
| Lead Time: | Standard lead times are 4-5 weeks upon receipt of Purchase Order, Verified Field Measurements and Deposit. Lead times are typical and should be verified by the manufacturer. |
| Warranty: | One-Year limited warranty from the date of purchase when materials are used in a normal application and property installed, used and serviced. This warranty is limited to the repair and/or exchange of defective material and does not include field labor charges. |

## SPECIAL INSTRUCTIONS

MANUFACTURER

Metpar Corporation 516-333-2600

Brian Pechar (516)333-2600 BrianP@metpar.com

ALTERNATE MANUFACTURER 1

ALTERNATE MANUFACTURER 2

ALTERNATE MANUFACTURER 3

AREAS

Public Space

Public Restroom - Men's (w/c)

# Toilet Partitions

Cutsheets

Dimensions in "( )" = Millimeters

**TP-001**
Revision Date:

**TP-002**
Revision Date:

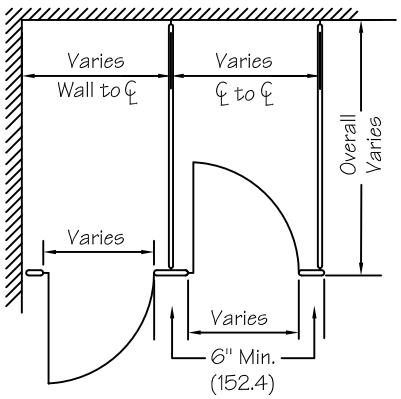


FLOOR PLAN

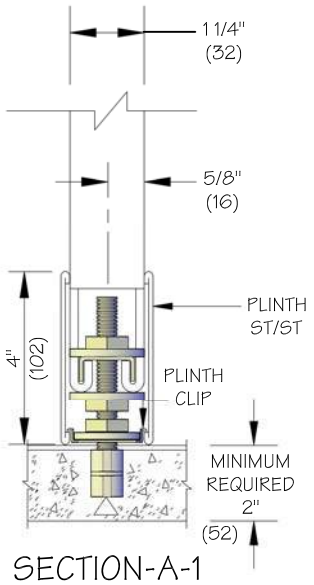


SECTION-A-1

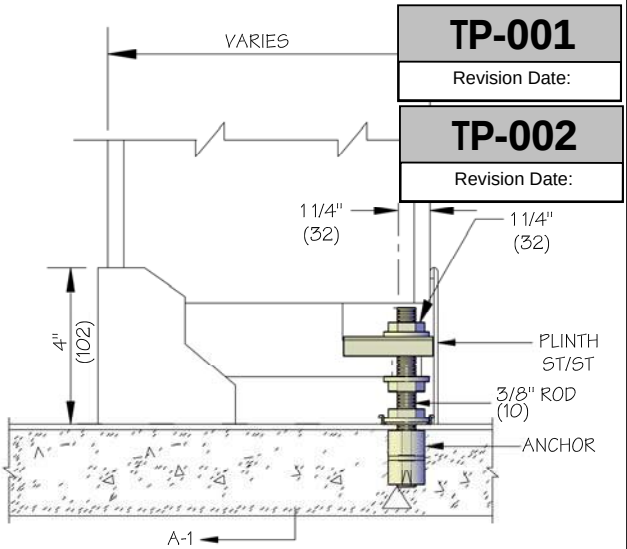


DETAIL A

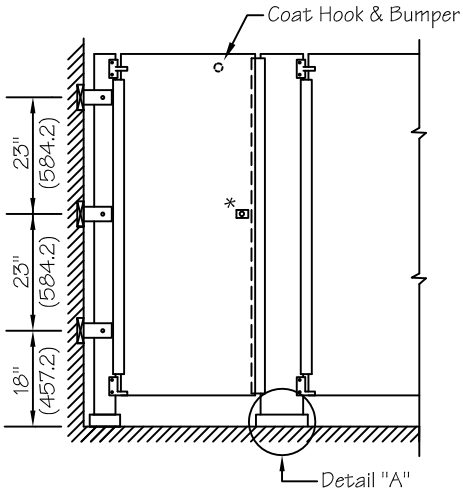


FRONT ELEVATION

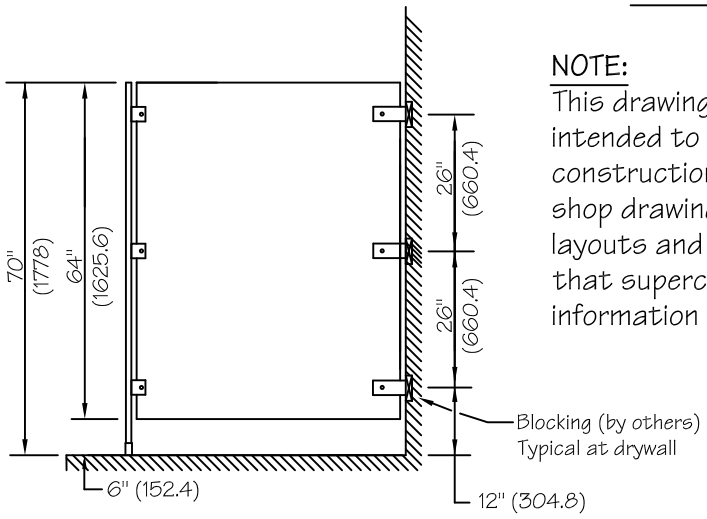


SIDE ELEVATION

**NOTE:**
This drawing is a standard detail intended to show general construction and specification. See shop drawing(s) for actual job layouts and specific job conditions that supercede any conflicting information on this detail sheet.

*Concealed Latch w/"In-Use" Indicator - Elevation 41" AFF unless otherwise specified.

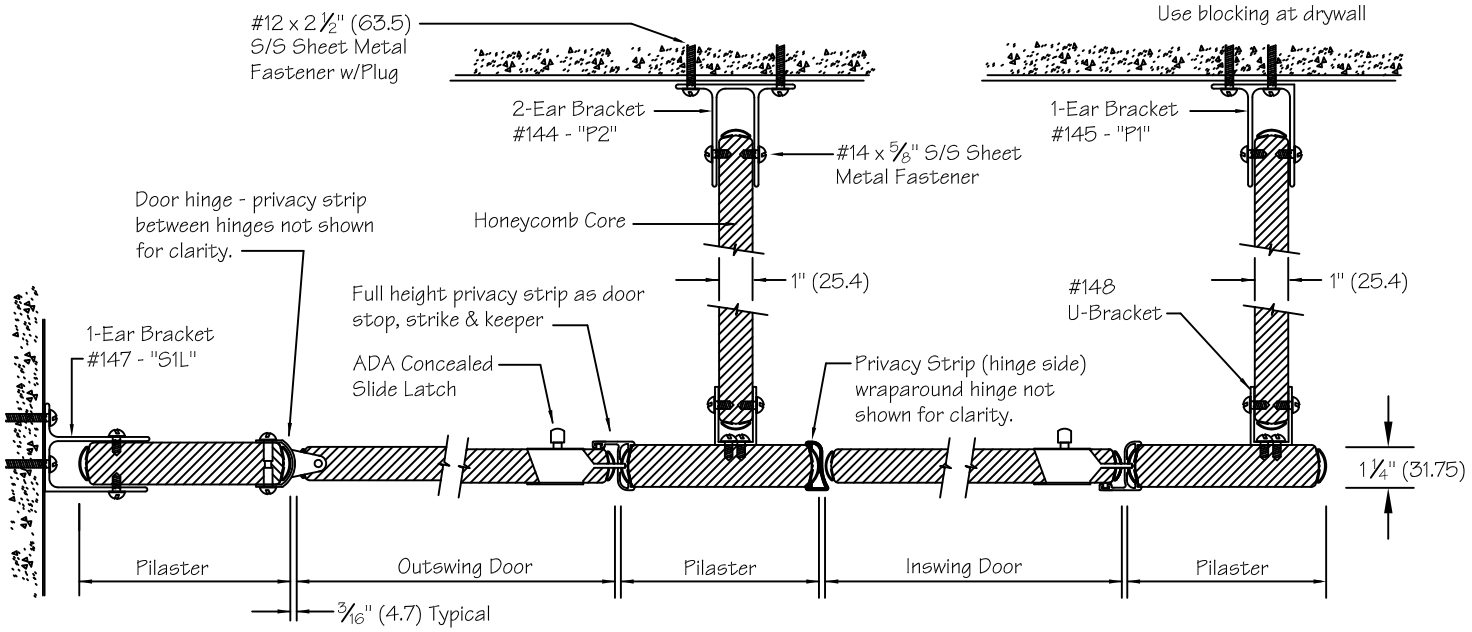



Metpar Sanymetal
95 State Street, Westbury, NY 11590 www.Metpar.com
Tel:516-333-2600 Fax:516-333-2618 Sales@Metpar.com


# STAINLESS STEEL
## Special Detail - FT700E
## DORIAN Style with Privacy Strips

FT700SSE.DWG 10/22/2014

| TP-001 |
| --- |
| Revision Date: |
| **TP-002** |
| Revision Date: |

# STAINLESS STEEL TOILET ENCLOSURES

## *THE LUXOR* TYPE: FT-700E Floor Mounted

## *Privacy Style*

**MATERIALS:** Stainless Steel #301/304 series in #4 finish

**THICKNESS:**
Doors..... 22 Gauge, Finished to 1" (25.4mm) at 64" (1625.6) high
Panels..... 20 Gauge, Finished to 1" (25.4mm) at 64" (1625.6) high
Pilasters..... 18 Gauge, Finished to 1 ¼" (31.75mm) at 70" (1778) high

**CONSTRUCTION:**

Doors:

Finished to 1" (25.4) thick, constructed of two sheets of 22-gauge stainless steel formed and cemented under pressure to a honeycomb core. Door face sheets are welded at intervals around the entire perimeter. All edges to be finished with a 20-gauge stainless steel interlocking molding. Corners are finished with pre-formed stainless steel reinforcements. Doors shall have internal steel reinforcements to secure hardware items.

Panels:

Finished to 1" (25.4) thick, constructed of 2 sheets of 20-gauge stainless steel, formed and cemented under pressure to a honeycomb core. All partition edges are finished with a 20-gauge stainless steel interlocking molding. Corners will be finished with pre-formed stainless steel reinforcements.

Pilasters:

Finished to 1¼" (31.75) thick, constructed of two sheets of 18-gauge stainless steel, formed and assembled with a honeycomb core. Face sheets are electrically welded at intervals around the entire perimeter. All pilasters will have a 4" (101.6) high #4 finish stainless steel plinth and have straight, flat sides profile with rounded edges to match the pilaster profile. Mounting channels are 12-gauge steel electrically welded to the pilaster face sheets. Zinc plated 3/8" (9.525) diameter studs, lock washers, nuts and lead expansion shields are provided.

**BRACKETS:**

Attachment brackets are die cast chrome plated stirrup brackets. Minimum of three (3) fittings at each connection.

**DOOR HARDWARE:**

Each compartment will be complete with two door hinges, latch, stop and keeper, coat hook, as well as all necessary fittings and fastenings for a complete installation. Hinges are fastened by means of tamper-proof Torx Pin Head through bolts, which are polished chrome plated. All other screws to be tamper-proof Torx Pin Head chrome plated. Doors are to be hung on a concealed, *"stay-set"*, fully adjustable, non-rising door mechanism. Upper hinge pin shall be 3/8" (9.525) diameter steel. All hinges will have wrap-around flanges with a minimum of 5/8" (15.875) wrap onto pilaster. All doors will have a concealed ADA approved slide latch with external *"in-use"* indicator. A continuous anodized aluminum extrusion, is provided for both strike & hinge sides to eliminate gaps between door & pilaster.

**FINISH:**

All stainless steel partitions are supplied with high strength 300 series alloys in a #4 finish. Optional 2B leathergrain and 5SM diamond pattern textured finishes are also available.

**OPTIONS:**

Full height 63" bright dip anodized aluminum brackets or stainless steel angles & U-Channels, 63" stainless steel MutliCam® hinges, Cast S/S wraparound hinges, surface latch, S&K. Other special heights or special elevations AFF.

Metpar

95 State Street, Westbury, New York 11590
Tel: 516-333-2600 ~ Fax: 516-333-2618
www.Metpar.com ~ Sales@Metpar.com

Sanymetal

# Toilet Accessories

Issue Date: 28 JUL 2017

Revision Date: 29 JAN 2018

| | |
|---|---|
| Item Name | Grab Bar |
| Description: | Grab bar and snap flange; concealed mounting |
| Manufacturer: | Bobrick Washroom Equipment |
| Product: | B-6806 (900 lbs pull) |
| Dimensions: | Tubing: 18 gauge; 1-1/2" diameter<br>Snap Flange Cover: 3-1/4" diameter x 1/2" D<br>*Various lengths available |
| Content: | Type 304 Stainless Steel |
| Hardware: | Mounting hardware supplied by manufacturer |
| Finish: | Satin Finish |
| Quality Standards: | Complies with ADAAG in USA for Structural Strength |
| Lead Time: | 2-3 days |
| Warranty: | Warranted to be free from defects in workmanship and material under normal usage service for one year from the date of purchase |
| Note: | Site elevation as required by ADA regulation and prevailing jurisdictions.<br>For ADA mounting locations, reference current ADA Standards |

## SPECIAL INSTRUCTIONS

MANUFACTURER

Bobrick Washroom Equipment, Inc. 818-764-1000

Customer Services / Sales 818-764-1000

ALTERNATE MANUFACTURER 1

ALTERNATE MANUFACTURER 2

ALTERNATE MANUFACTURER 3

AREAS

Public Space

- Pool (Splash) Restroom (w/c)
- Employee Toilet (w/c)
- Public Restroom - Men's (w/c)
- Public Restroom - Women's (w/c)

Issue Date: 14 FEB 2019

Revision Date:

| | |
|---|---|
| Item Name | Grab Bar |
| Description: | Purist 42" Grab Bar |
| Manufacturer: | Kohler |
| Product: | K-11896-BS |
| Dimensions: | 44 7/16" L overall x 2 3/4" W x 2 7/16" H |
| Content: | Premium Metal |
| Finish: | Brushed Stainless |
| Quality Standards: | ADA Compliant<br>ICC/ANSI A117.1 |
| Lead Time: | Standard lead time is a minimum of 8 weeks from receipt of Purchase Order and Deposit. Lead time is typical and should be verified by manufacturer. |
| Warranty: | Lifetime Limited Warranty |

## SPECIAL INSTRUCTIONS

MANUFACTURER

Kohler Co.

Anupa Maru (703) 371.4269 Anupa.Maru@Kohler.com

ALTERNATE MANUFACTURER 1

ALTERNATE MANUFACTURER 2

ALTERNATE MANUFACTURER 3

AREAS

Public Space

Pool (Splash) Restroom (w/c)

Issue Date: 28 JUL 2017

Revision Date:

| | |
|---|---|
| Item Name | Grab Bar |
| Description: | Purist 36" Grab Bar |
| Manufacturer: | Kohler |
| Product: | K-11895-BS |
| Dimensions: | 38 7/16" L overall x 2 3/4" W x 2 7/16 H |
| Content: | Premium Metal |
| Finish: | Brushed Stainless |
| Quality Standards: | ADA Compliant<br>ICC/ANSI A117.1 |
| Lead Time: | Standard lead time is a minimum of 8 weeks from receipt of Purchase Order and Deposit. Lead time is typical and should be verified by manufacturer. |
| Warranty: | Lifetime Limited Warranty |

## SPECIAL INSTRUCTIONS

MANUFACTURER

Kohler 703-371-4269

Anupa Maru anupa.maru@kohler.com

ALTERNATE MANUFACTURER 1

ALTERNATE MANUFACTURER 2

ALTERNATE MANUFACTURER 3

AREAS

Public Space

Pool (Splash) Restroom (w/c)

Issue Date: 14 FEB 2019

Revision Date:

| | |
|---|---|
| Item Name | Grab Bar |
| Description: | Purist 18" Grab Bar |
| Manufacturer: | Kohler |
| Product: | K-11892-BS |
| Dimensions: | 20 7/16" L overall x 2 3/4" W x 2 7/16"H |
| Content: | Premium Metal |
| Finish: | Brushed Stainless |
| Quality Standards: | ADA Compliant<br>ICC/ANSI A117.1 |
| Lead Time: | Standard lead time is a minimum of 8 weeks from receipt of Purchase Order and Deposit. Lead time is typical and should be verified by manufacturer. |
| Warranty: | Lifetime Limited Warranty |

## SPECIAL INSTRUCTIONS

MANUFACTURER

Kohler 703-371-4269

Anupa Maru anupa.maru@kohler.com

ALTERNATE MANUFACTURER 1

ALTERNATE MANUFACTURER 2

ALTERNATE MANUFACTURER 3

AREAS

Public Space

Pool (Splash) Restroom (w/c)

Issue Date: 28 JUL 2017

Revision Date: 29 JAN 2018

| | |
|---|---|
| Item Name | Toilet Paper Dispenser |
| Description: | Surface mounted multi-roll toilet tissue dispenser |
| Manufacturer: | Bobrick Washroom Equipment |
| Product: | B-2888 |
| Dimensions: | 6-1/16" L x 5-5/16" D x 11" H overall |
| Content: | Type-304 stainless steel |
| Finish: | Satin finish |
| Quality Standards: | 67% Post industrial recycled stainless steel content |
| Lead Time: | 2-3 days |
| Warranty: | Warranted to be free from defects in workmanship and material under normal usage service for one year from the date of purchase |

## SPECIAL INSTRUCTIONS

MANUFACTURER

| | |
|---|---|
| Bobrick Washroom Equipment, Inc. | 818-764-1000 |
| Customer Services / Sales | 818-764-1000 |

ALTERNATE MANUFACTURER 1

ALTERNATE MANUFACTURER 2

ALTERNATE MANUFACTURER 3

AREAS

Public Space

- Pool (Splash) Restroom (w/c)
- Employee Toilet (w/c)
- Public Restroom - Men's (w/c)
- Public Restroom - Women's (w/c)

Issue Date: 14 FEB 2019

Revision Date:

| | |
|---|---|
| Item Name | Toilet Paper Holder |
| Description: | Toilet Tissue Dispenser with Utility Shelf |
| Manufacturer: | Bobrick |
| Product: | B-2840 |
| Dimensions: | 16" W x 4"H x 5"D |
| Content: | Stainless Steel |
| Finish: | Satin |
| Quality Standards: | 67% Post industrial recycled stainless steel content. |
| Lead Time: | 2-3 Days |
| Warranty: | Warranted to be free from defects in workmanship and material under normal usage service for one year from the date of purchase. |

## SPECIAL INSTRUCTIONS

MANUFACTURER

BOBRICK 518-877-7444

Mike Fugatt (804) 550-0025 mike.fugatt@repsourceinc.com

ALTERNATE MANUFACTURER 1

ALTERNATE MANUFACTURER 2

ALTERNATE MANUFACTURER 3

AREAS

Public Space

Pool (Splash) Restroom (w/c)

Issue Date: 28 JUL 2017

Revision Date: 29 JAN 2018

| | |
|---|---|
| Item Name | Purse / Coat Hook |
| Description: | Wall-mounted cylindrical purse / coat hook |
| Manufacturer: | Bathsource |
| Product: | BA-6252 |
| Dimensions: | 2" Diameter x 1.79" H |
| Content: | Brass |
| Hardware: | Mounting hardware supplied by manufacturer |
| Finish: | Brushed Chrome |
| Quality Standards: | Not applicable |
| Lead Time: | Standard lead times are 4-6 weeks from receipt of Purchase Order and Deposit. Lead time is typical and should be verified by the manufacturer. |
| Warranty: | Warranted to be free from defects in workmanship and material under normal usage for one year from the date of purchase. |

## SPECIAL INSTRUCTIONS

MANUFACTURER

BathSource, LLC

Patrick Stewart 800-614-2035 Sales@onebathsource.com

ALTERNATE MANUFACTURER 1

Moen 1-800-289-6636

Dana Thompson dana.thompson@fbgpg.com

ALTERNATE MANUFACTURER 2

ALTERNATE MANUFACTURER 3

AREAS

Public Space

- Pool (Splash) Restroom (w/c)
- Employee Toilet (w/c)
- Public Restroom - Men's (w/c)
- Public Restroom - Women's (w/c)

Issue Date: 28 JUL 2017

Revision Date: 14 FEB 2019

| | |
|---|---|
| Item Name | Purse / Coat Hook |
| Description: | Wall-mounted purse / coat hook |
| Manufacturer: | Moen |
| Product: | YB0403CH |
| Dimensions: | 1.34" Diameter x 2.54" D |
| Content: | Zinc |
| Finish: | Chrome |
| Quality Standards: | Not applicable |
| Lead Time: | To be verified |
| Warranty: | Limited lifetime warranty |
| Hardware: | Mounting hardware supplied by manufacturer |

## SPECIAL INSTRUCTIONS

MANUFACTURER

Moen 1-800-289-6636

Dana Thompson 516.528.9064 dana.thompson@fbgpg.com

ALTERNATE MANUFACTURER 1

BathSource, LLC

Patrick Stewart Sales@onebathsource.com

ALTERNATE MANUFACTURER 2

ALTERNATE MANUFACTURER 3

AREAS

Public Space

- Employee Toilet (w/c)
- Pool (Splash) Restroom (w/c)
- Public Restroom - Men's (w/c)
- Public Restroom - Women's (w/c)

Issue Date: 14 FEB 2019

Revision Date:

| | |
|---|---|
| Item Name | Robe Hook |
| Description: | Heavy-Duty Clothes Hook with Concealed Mounting |
| Manufacturer: | Bobrick |
| Product: | B-2116 |
| Dimensions: | Flange Diameter: 2 3/4"<br>Unit Projects: 3 7/16" |
| Content: | Brass |
| Finish: | Satin nickel-plated |
| Quality Standards: | N/A |
| Lead Time: | 2-3 Days |
| Warranty: | Warranted to be free from defects in workmanship and material under normal usage service for one year from the date of purchase. |

## SPECIAL INSTRUCTIONS

MANUFACTURER

BOBRICK 518-877-7444

Mike Fugatt (804) 550-0025 mike.fugatt@repsourceinc.com

ALTERNATE MANUFACTURER 1

ALTERNATE MANUFACTURER 2

ALTERNATE MANUFACTURER 3

AREAS

Public Space

Pool (Splash) Restroom (w/c)

Issue Date: 28 JUL 2017

Revision Date: 29 JAN 2018

| | |
|---|---|
| Item Name | Folding Shower Seat |
| Description: | Folding shower seat at pool restroom |
| Manufacturer: | Bobrick Washroom Equipment |
| Product: | B-5191 |
| Dimensions: | 18" W x 15-13/16" D when open |
| Content: | Seat: Fused plastic laminate with melamine surfaces<br>Frame/Carriage: Stainless steel |
| Finish: | Seat: Ivory-colored face sheets and black phenolic-resin core |
| Quality Standards: | Shower seat shall comply with accessible design guidelines (including ADAAG in the U.S.A.) |
| Lead Time: | 2-3 days |
| Warranty: | Warranted to be free from defects in workmanship and material under normal usage service for one year from the date of purchase |
| Note: | Site elevation as required by ADA regulation and prevailing jurisdictions. For ADA mounting locations, reference current ADA Standards. |

## SPECIAL INSTRUCTIONS

MANUFACTURER

Bobrick Washroom Equipment, Inc. 818-764-1000

Customer Services / Sales 818-764-1000

ALTERNATE MANUFACTURER 1

ALTERNATE MANUFACTURER 2

ALTERNATE MANUFACTURER 3

AREAS

Public Space

Pool Shower

Issue Date: 28 JUL 2017

Revision Date: 29 JAN 2018

| | |
|---|---|
| Item Name | Hand Dryer (Alternate) |
| Description: | Automatic hand dryer |
| Manufacturer: | Dyson US |
| Product: | AB12 (Dyson Airblade V) |
| Price/Order Note: | Please reference National Pricing Number Q -DYS00000736 as well as the Property Number and Location when ordering this product to obtain the program price |
| Dimensions: | 9.21" W x 3.93" D x 15.51" H |
| Content: | Polycarbonate - ABS casing with anit-microbial additive in paint |
| Finish: | AB12 Sprayed Nickel |
| Quality Standards: | Carbon Trust, NSF International, ADA compliant and contributes to LEED certification |
| Warranty: | 5-year parts and 5-year limited labor warranty |
| Lead Time: | Standard processing and delivery time is 7-10 business days. |
| Hardware: | Mounting hardware supplied by manufacturer |

## SPECIAL INSTRUCTIONS

MANUFACTURER

Dyson US

Paolo Estefania 720-237-7812 paolo.estefania@dyson.com

ALTERNATE MANUFACTURER 1

Excel Dryer, Inc.

Customer Service sales@exceldryer.com

ALTERNATE MANUFACTURER 2

ALTERNATE MANUFACTURER 3

AREAS

Public Space

- Pool (Splash) Restroom (w/c)
- Employee Toilet (w/c)
- Public Restroom - Men's (w/c)
- Public Restroom - Women's (w/c)

# TA-800-EX

Revision 1

Toilet Accessories

Issue Date: 28 JUL 2017
Revision Date: 29 JAN 2018

| | |
|---|---|
| Item Name | Hand Dryer |
| Description: | Surface mounted automatic hand dryer |
| Manufacturer: | Excel Dryer, Inc. |
| Product: | XL-SB |
| Dimensions: | 11-3/4" W x 6-11/16" (projection from wall) x 12-11/16" H overall |
| Content: | Stainless steel |
| Hardware: | Mounting hardware supplied by manufacturer |
| Finish: | Brushed stainless steel |
| Quality Standards: | Not applicable |
| Lead Time: | To be verified |
| Warranty: | 5-Year Limited Warranty |

## SPECIAL INSTRUCTIONS

### MANUFACTURER

Excel Dryer, Inc.

Customer Service 413-525-4531 sales@exceldryer.com

### ALTERNATE MANUFACTURER 1

Dyson US

Paolo Estefania paolo.estefania@dyson.com

### ALTERNATE MANUFACTURER 2

### ALTERNATE MANUFACTURER 3

### AREAS

Public Space

- Pool (Splash) Restroom (w/c)
- Employee Toilet (w/c)
- Public Restroom - Men's (w/c)
- Public Restroom - Women's (w/c)

Issue Date: 28 JUL 2017

Revision Date: 29 JAN 2018

| | |
|---|---|
| Item Name | Napkin/Tampon Vendor |
| Description: | Surface mounted sanitary napkin/tampon vendor |
| Manufacturer: | Bobrick Washroom Equipment |
| Product: | B-2706 50 (Bobrick Classic Series) |
| Dimensions: | 11-7/8" W x 6-9/16" D x 25-7/8" H overall |
| Content: | Stainless steel |
| Finish: | Satin finish |
| Quality Standards: | Not applicable |
| Lead Time: | 2-3 days |
| Warranty: | Warranted to be free from defects in workmanship and material under normal usage service for one year from the date of purchase |

## SPECIAL INSTRUCTIONS

MANUFACTURER

Bobrick Washroom Equipment, Inc. 818-764-1000

Customer Services / Sales 818-764-1000

ALTERNATE MANUFACTURER 1

ALTERNATE MANUFACTURER 2

ALTERNATE MANUFACTURER 3

AREAS

Public Space

- Pool (Splash) Restroom (w/c)
- Employee Toilet (w/c)
- Public Restroom - Men's (w/c)
- Public Restroom - Women's (w/c)

Issue Date: 28 JUL 2017

Revision Date: 29 JAN 2018

| | |
|---|---|
| Item Name | Soap Dispenser |
| Description: | Lavatory mounted soap dispenser |
| Manufacturer: | Bobrick Washroom Equipment |
| Product: | B-8226 (Bobrick Contura Series) |
| Dimensions: | 13" L x 5-1/16" D x 16-3/4" H overall 34 fl oz capacity |
| Content: | Metal / Stainless Steel |
| Finish: | Satin Finish |
| Quality Standards: | Not applicable |
| Lead Time: | 2-3 days |
| Warranty: | 3-Year Warranty |

## SPECIAL INSTRUCTIONS

MANUFACTURER

| | |
|---|---|
| Bobrick Washroom Equipment, Inc. | 818-764-1000 |
| Customer Services / Sales | 818-764-1000 |

ALTERNATE MANUFACTURER 1

ALTERNATE MANUFACTURER 2

ALTERNATE MANUFACTURER 3

AREAS

Public Space

- Public Restroom - Men's (w/c)
- Public Restroom - Women's (w/c)

Issue Date: 28 JUL 2017

Revision Date: 29 JAN 2018

| | |
|---|---|
| Item Name | Seat Cover Dispenser |
| Description: | Recessed seat cover dispenser |
| Manufacturer: | Bobrick Washroom Equipment |
| Product: | B-301 |
| Dimensions: | 15-3/4" W x 2" D x 11" H overall |
| Content: | Stainless Steel |
| Finish: | Satin Finish |
| Quality Standards: | Not applicable |
| Lead Time: | 2-3 days |
| Warranty: | Warranted to be free from defects in workmanship and material under normal usage service for one year from the date of purchase |

## SPECIAL INSTRUCTIONS

MANUFACTURER

Bobrick Washroom Equipment, Inc. 818-764-1000

Customer Services / Sales 818-764-1000

ALTERNATE MANUFACTURER 1

ALTERNATE MANUFACTURER 2

ALTERNATE MANUFACTURER 3

AREAS

Public Space

- Pool (Splash) Restroom (w/c)
- Employee Toilet (w/c)
- Public Restroom - Men's (w/c)
- Public Restroom - Women's (w/c)

Issue Date: 28 JUL 2017

Revision Date:

| | |
|---|---|
| Item Name | Napkin Disposal |
| Description: | Recessed sanitary napkin disposal receptacle |
| Manufacturer: | Bobrick Washroom Equipment |
| Product: | B-35303 |
| Dimensions: | 13" W x 4-3/16" D x 18-5/16" H overall |
| Content: | Stainless Steel |
| Finish: | Satin |
| Quality Standards: | Not applicable |
| Lead Time: | 2-3 days |
| Warranty: | Warranted to be free from defects in workmanship and material under normal usage service for one year from the date of purchase |
| Note: | Mount on wall opposite toilet paper dispenser at height noted per Bobrick |

## SPECIAL INSTRUCTIONS

MANUFACTURER

Bobrick Washroom Equipment, Inc. 818-764-1000

Customer Services / Sales 818-764-1000

ALTERNATE MANUFACTURER 1

ALTERNATE MANUFACTURER 2

ALTERNATE MANUFACTURER 3

AREAS

Public Space

- Pool (Splash) Restroom (w/c)
- Employee Toilet (w/c)
- Public Restroom - Men's (w/c)
- Public Restroom - Women's (w/c)

Issue Date: 28 JUL 2017

Revision Date: 29 JAN 2018

| | |
|---|---|
| Item Name | Wall-Mounted Soap Dispenser |
| Description: | Surface-mounted soap dispenser |
| Manufacturer: | Bobrick Washroom Equipment |
| Product: | B-4112 (Contura Series) |
| Dimensions: | 7" W x 3-5/16" D x 6-1/8" H |
| Content: | Stainless Steel |
| Finish: | Satin |
| Quality Standards: | Valve shall be operable with one hand and with less than 5 pounds of force (22.2 N) to comply with accessible design guidelines (including ADAAG in U.S.A.) |
| Lead Time: | 2-3 days |
| Warranty: | Limited 3-Year Warranty |

## SPECIAL INSTRUCTIONS

MANUFACTURER

Bobrick Washroom Equipment, Inc. 818-764-1000

Customer Services / Sales 818-764-1000

ALTERNATE MANUFACTURER 1

ALTERNATE MANUFACTURER 2

ALTERNATE MANUFACTURER 3

AREAS

Public Space

Employee Toilet (w/c)

Issue Date: 28 JUL 2017

Revision Date:

| | |
|---|---|
| Item Name | Clear Mirror |
| Description: | Clear mirror with polished edges |
| Manufacturer: | GC to Source / Install |
| Product: | Not applicable |
| Dimensions: | Refer to ID drawing set for sizes (VIF - Verify in Field) |
| Thickness: | 1/4" |
| Content: | Non-tempered glass |
| Lead Time: | To be verified |
| Warranty: | To be verified |

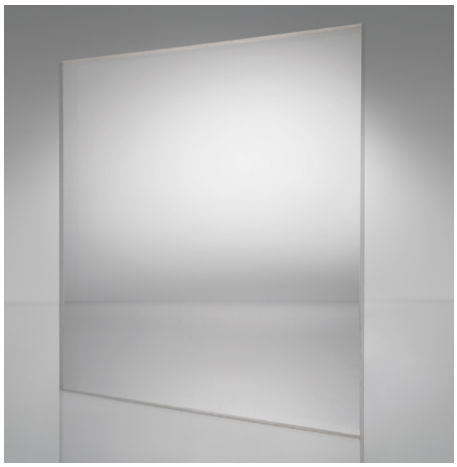

## SPECIAL INSTRUCTIONS

MANUFACTURER

GC to Source / Install

General Contractor

ALTERNATE MANUFACTURER 1

ALTERNATE MANUFACTURER 2

ALTERNATE MANUFACTURER 3

AREAS

Public Space

Fitness Center (Re:Charge)

Public Restroom - Men's (w/c)

Public Restroom - Women's (w/c)

Issue Date: 28 JUL 2017

Revision Date:

| | |
|---|---|
| Item Name | Napkin Disposal, Surface Mounted |
| Description: | Surface Mounted Sanitary Napkin Disposal Receptacle |
| Manufacturer: | Bobrick Washroom Equipment |
| Product: | B-254 |
| Dimensions: | 10 11/16" W x 4-1/16" D x 15 -1/8" H overall |
| Content: | Stainless Steel |
| Finish: | Satin |
| Quality Standards: | Not applicable |
| Lead Time: | 2-3 days |
| Warranty: | Warranted to be free from defects in workmanship and material under normal usage service for one year from the date of purchase |
| Note: | Mount on partition at height noted per Bobrick |

## SPECIAL INSTRUCTIONS

MANUFACTURER

Bobrick Washroom Equipment, Inc. 818-764-1000

Customer Services / Sales 818-764-1000

ALTERNATE MANUFACTURER 1

ALTERNATE MANUFACTURER 2

ALTERNATE MANUFACTURER 3

AREAS

Public Space

Public Restroom - Women's (w/c)

Issue Date: 14 FEB 2019

Revision Date:

| | |
|---|---|
| Item Name | Automatic Hand Dryer |
| Description: | Bobrick InstaDryTm Surface Mounted Automatic Hand Dryer |
| Manufacturer: | Bobrick |
| Product: | B-7125 |
| Dimensions: | 10 7/8" x 12 5/8" |
| Content: | Stainless Steel |
| Finish: | Satin |
| Quality Standards: | 67% Post industrial recycled stainless steel content. |
| Lead Time: | 2-3 Days |
| Warranty: | Warranted to be free from defects in workmanship and material under normal usage service for one year from the date of purchase. |

## SPECIAL INSTRUCTIONS

MANUFACTURER

BOBRICK 518-877-7444

Mike Fugatt (804) 550-0025 mike.fugatt@repsourceinc.com

ALTERNATE MANUFACTURER 1

ALTERNATE MANUFACTURER 2

ALTERNATE MANUFACTURER 3

AREAS

Public Space

Pool (Splash) Restroom (w/c)

Issue Date: 14 FEB 2019

Revision Date:

| | |
|---|---|
| Item Name | Paper Towel and Waste Dispenser |
| Description: | ConturaSeries Recessed Paper Towel Dispenser and Waste Receptacle |
| Manufacturer: | Bobrick |
| Product: | B-43944 |
| Dimensions: | 17 7/16"W x 56 1/4"H x 8"D |
| Content: | Stainless Steel |
| Finish: | Satin |
| Quality Standards: | 67% Post industrial recycled stainless steel content. |
| Lead Time: | 2-3 Days |
| Warranty: | Warranted to be free from defects in workmanship and material under normal usage service for one year from the date of purchase. |

## SPECIAL INSTRUCTIONS

MANUFACTURER

BOBRICK 518-877-7444

Mike Fugatt (804) 550-0025 mike.fugatt@repsourceinc.com

ALTERNATE MANUFACTURER 1

ALTERNATE MANUFACTURER 2

ALTERNATE MANUFACTURER 3

AREAS

Public Space

Pool (Splash) Restroom (w/c)

Issue Date: 14 FEB 2019

Revision Date:

| | |
|---|---|
| Item Name | Lavatory Mirror |
| Description: | Fixed Position Tilt Mirror |
| Manufacturer: | Bobrick |
| Product: | B-293 |
| Dimensions: | 24"W x 36"H x 4 3/8" D |
| Content: | Stainless Steel |
| Finish: | Satin |
| Quality Standards: | 67% Post industrial recycled stainless steel content. |
| Lead Time: | 2-3 Days |
| Warranty: | Warranted to be free from defects in workmanship and material under normal usage service for one year from the date of purchase. |

## SPECIAL INSTRUCTIONS

MANUFACTURER

BOBRICK 518-877-7444

Mike Fugatt (804) 550-0025 mike.fugatt@repsourceinc.com

ALTERNATE MANUFACTURER 1

ALTERNATE MANUFACTURER 2

ALTERNATE MANUFACTURER 3

AREAS

Public Space

Pool (Splash) Restroom (w/c)

Issue Date: 14 FEB 2019

Revision Date:

| | |
|---|---|
| Item Name | Seat Cover Dispenser |
| Description: | Recessed Toilet Seat Cover Dispenser TrimLineSeries |
| Manufacturer: | Bobrick |
| Product: | B-3013 |
| Dimensions: | 17 9/16"W x 13 1/16"H x 3"D |
| Content: | Stainless Steel |
| Finish: | Satin |
| Quality Standards: | 67% Post industrial recycled stainless steel content. |
| Lead Time: | 2-3 Days |
| Warranty: | Warranted to be free from defects in workmanship and material under normal usage service for one year from the date of purchase. |

## SPECIAL INSTRUCTIONS

MANUFACTURER

BOBRICK 518-877-7444

Mike Fugatt (804) 550-0025 mike.fugatt@repsourceinc.com

ALTERNATE MANUFACTURER 1

ALTERNATE MANUFACTURER 2

ALTERNATE MANUFACTURER 3

AREAS

Public Space

Pool (Splash) Restroom (w/c)

Issue Date: 14 FEB 2019

Revision Date:

| | |
|---|---|
| Item Name | Soap Dispenser |
| Description: | 40 Oz Classic Series Surface Mounted Soap Dispenser |
| Manufacturer: | Bobrick |
| Product: | B-2111 |
| Dimensions: | 4 3/4" W x 3.5" D x 8 1/8" H |
| Content: | Stainless Steel |
| Finish: | Satin |
| Quality Standards: | TBD |
| Lead Time: | TBD |
| Warranty: | TBD |

## SPECIAL INSTRUCTIONS

MANUFACTURER

BOBRICK 518-877-7444

Mike Fugatt (804) 550-0025 mike.fugatt@repsourceinc.com

ALTERNATE MANUFACTURER 1

ALTERNATE MANUFACTURER 2

ALTERNATE MANUFACTURER 3

AREAS

Public Space

Pool (Splash) Restroom (w/c)

Issue Date: 07 FEB 2019

Revision Date:

| | |
|---|---|
| Item Name | Baby Changing Station |
| Description: | Horizontal recessed mounted baby changing station |
| Manufacturer: | Koala Kare Products |
| Product: | KB110-SSRE |
| Dimensions: | 37" W x 4" D (when closed) x 23" H overall |
| Content: | Exterior: Stainless Steel<br>Interior: High density polyethylene with Microban Antimicrobial additive |
| Finish: | Stainless Steel: Satin<br>Polyethylene: Grey |
| Quality Standards: | Complies with ASTM static load performance requirements when properly installed.<br>Unit shall conform to ICC A117.1-2009 Accessible and Usable Buildings and Facilities.<br>ASTM F 2285-04 Standard Consumer Safety Performance Specification for Diaper Changing Tables for Commercial Use.<br>ANSI Z535.4 Product Safety Signs and Labels.<br>ASTM G21 Antifungal Standards or local code if more stringent installation requirements are applicable for barrier-free accessibility. |
| Lead Time: | To be verified |
| Warranty: | 5-Year Limited Warranty on materials and workmanship and include a provision for replacement caused by vandalism |
| Note: | Baby changing station is required in all public space bathrooms |

## SPECIAL INSTRUCTIONS

MANUFACTURER

Koala Kare Products
*Division of Bobrick
888-733-3456
Customer Service / Sales

ALTERNATE MANUFACTURER 1

ALTERNATE MANUFACTURER 2

ALTERNATE MANUFACTURER 3

AREAS

Public Space

Public Restroom - Men's (w/c)

Public Restroom - Women's (w/c)

Toilet Accessories
Cutsheets

BOBRICK

**Technical Data**

# 1½" (38mm) DIAMETER STAINLESS STEEL GRAB BARS WITH SNAP FLANGE

# B-6806 SERIES

**Specify Finish Required:**

- ☐ Satin finish
- ☐ Satin finish with peened gripping surface; add suffix .99 to model number

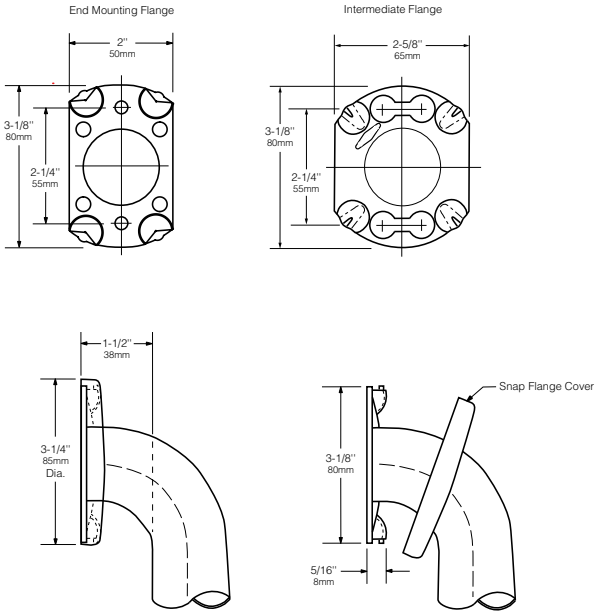


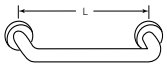


**HORIZONTAL**

**VERTICAL**

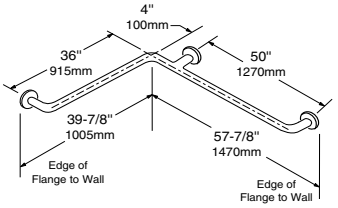


**TWO-WALL WHEELCHAIR TOILET COMPARTMENT**

**B-6806 x 12, 18, 24, 30, 36, 42, 48**

**B-68137**

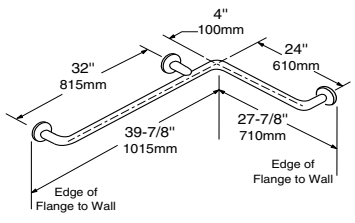


**HORIZONTAL TUB / SHOWER / TOILET COMPARTMENT BAR 24 x 36**

**B-68616**

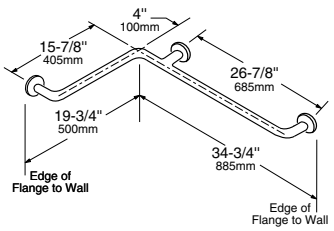


**HORIZONTAL TWO-WALL BAR for Shower Stall**

**B-6861**

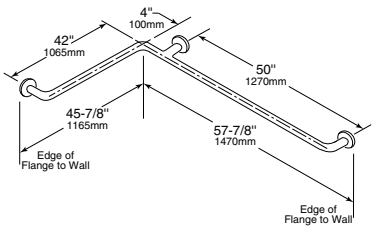


**TWO-WALL TOILET COMPARTMENT BAR 42 x 54**

**B-6897**

continued . . .

The illustrations and descriptions herein are applicable to production as of the date of this Technical Data Sheet.
The manufacturer reserves the right to, and does from time to time, make changes and improvements in designs and dimensions.

Rev. 7/29/16 S/B
Printed in U.S.A.
© 2016 by Bobrick Washroom Equipment, Inc.

**MATERIALS:**

**Grab Bar —** 18-8 S, type-304, 18-gauge (1.2mm) stainless steel tubing with satin-finish. 1-1/2" (38mm) outside diameter. Ends are heliarc welded to flanges. Clearance between the grab bar and wall is 1-1/2" (38mm).

**Concealed Mounting Flanges —** 18-8 S, type-304, 11-gauge (3.2mm) thick, stainless steel plate; end flanges 2" x 3-1/8" (50 x 80mm) with holes for attachment to wall. Intermediate flanges 2-5/8" x 3-1/8" (65 x 80mm) wide x 3-1/8" (80mm) diameter.

**Snap Flange Covers —** 18-8 S, type-304, 22-gauge (0.8mm) drawn stainless steel with satin-finish. 3-1/4" (85mm) diameter x 1/2" (13mm) deep. Each cover snaps over mounting flange to conceal mounting screws.

**STRENGTH:**

Bobrick grab bars that provide 1-1/2" (38mm) clearance from wall can support loads in excess of 900 pounds (408kg) if properly installed. Other grab bar configurations can support loads in excess of 250 pounds (113kg) if properly installed, complying with accessible design (including ADAAG in the U.S.A.) for structural strength

**Safety Warning: Grab bars are no stronger than the anchors and walls to which they are attached and, therefore, must be firmly secured in order to support the loads for which they are intended. To avoid potential injury, the building owner or maintenance personnel should remove the grab bar from service if the grab bar is not adequately secured to wall or if there is any observed damage to the welds.**

**INSTALLATION:**

Provide concealed anchor device or backing as specified or required in accordance with local building codes before wall is finished. Fasten concealed mounting flanges to anchor device or backing with at least two screws opposing each other in each flange. Snap flange covers over each mounting flange to conceal mounting screws. Concealed anchor devices and mounting screws are not included with Bobrick grab bars and must be specified as an accessory.

For Grab Bars with an Intermediate Flange(s), Pull Snap-Flange Covers away from mounting flanges. Place grab bar in desired mounting location. Use intermediate flange as a template to mark location of mounting screws at intermediate flange only. Mark screw locations at the center of the slot in the middle of the double-keyhole shaped mounting holes (2) in the intermediate flange. Remove grab bar from wall. Drive the intermediate flange mounting screws into wall at marked locations. **Note:** Make sure to leave a space of just over 1/8" (3.17mm) between the underside of the screw head and the wall. Install grab bar on the wall by placing the round ends of the intermediate flange double-keyhole shaped mounting holes over the mounting screws (2) are located in the middle of the flange slots. Install the mounting screws into the wall at the end flanges and secure tightly. Tighten the mounting screws at the intermediate flange. Press all snap-flange covers into place to conceal mounting flanges.

**Note:** Recommend use of 1/4" or #14 sheet metal or wood screws to install Intermediate Flange. #12 screws may also be used.

**Important Notes:**

1. **Mounting Kits —** Bobrick offers a mounting kit for installing grab bars; **one Bobrick mounting kit is required for each flange.**

| Mounting Kit No. | Description |
|---|---|
| 252-30 | Consists of # (3) 14 x 2½" type-304 stainless steel, Phillips round-head, sheet-metal screws. |

2. **Grab Bar Fastener —** Bobrick offers a grab bar fastening system that secures all Bobrick grab bar series; **one Bobrick fastener is required for each flange.** Install grab bar without backing in wall requires minimum 5/8" (16mm) thick painted or tiled drywall.

| WingIt™ Fastener No. | Description |
|---|---|
| 251-4 | Consists of 10–32 x 5/16" round-head, Phillips 18/8 stainless steel screws. (1) WingIt grab bar fastener. |

3. **Optional Anchor Device —** Bobrick grab bar anchor device includes stainless steel machine screws to be used for attaching grab bars to anchors. **one Bobrick concealed anchor device is required for each flange.**

| Optional Anchor No. | Description |
|---|---|
| 2583 | Anchor for 3/4" to 1" (19-25mm) panel 1 anchor required for each flange. |
| 2586 | Anchor for 1/2" to 1" (13mm) panel 1 anchor required for each flange. |

**SPECIFICATION:**

Grab bar shall be type-304 stainless steel with satin-finish. Grab bar shall have 18-gauge (1.2mm) wall thickness and 1-1/2" (38mm) outside diameter. Clearance between the grab bar and wall shall be 1-1/2" (38mm). Concealed mounting flanges shall be 11-gauge (3.2mm) thick stainless steel plate, 2" x 3-1/8" (50 x 80mm), and equipped with at least two screw holes for attachment to wall. Flange covers shall be 22 gauge (0.8mm), 3-1/4" (85mm) diameter x 1/2" (13mm) deep, and shall snap over mounting flange to conceal mounting screws and/or WingIt fasteners. Ends of grab bar shall pass through concealed mounting flanges and be heliarc welded to form one structural unit. Grab bar shall comply with accessible design (including ADAAG in the U.S.A.) for structural strength.

**Grab Bar shall be Model _____ (insert model number) of Bobrick Washroom Equipment, Inc., Clifton Park, New York; Jackson, Tennessee; Los Angeles, California; Bobrick Washroom Equipment Company, Scarborough, Ontario; Bobrick Washroom Equipment Pty. Ltd., Australia; and Bobrick Washroom Equipment Limited, United Kingdom.**


© 2016 by Bobrick Washroom Equipment, Inc.

KOHLER®

TA-102
Revision Date:

# Purist®
42" Grab Bar
**K-11896**

## Features
- KOHLER finishes resist corrosion and tarnish.
- 42- inch bar.
- Contemporary styling matches any decor.
- Coordinates with other products in the Purist® collection.
- ADA compliant when installed per ADA guidelines.
- 44-7/16" (1129 mm) x 2-3/4" (70 mm) x 2-7/16" (62 mm)

## Material
- Premium metal construction.

## Components
Additional included component/s: Installation hardware.

**ADA**

## Codes/Standards
ADA
ICC/ANSI A117.1

## KOHLER® Faucet Lifetime Limited Warranty
See website for detailed warranty information.

## Available Color/Finishes
*Color tiles intended for reference only.*

| Color | Code | Description |
|---|---|---|
| | S | Polished Stainless |
| | SN | Vibrant® Polished Nickel |
| | BN | Vibrant® Brushed Nickel |
| | BS | Brushed Stainless |
| | BV | Vibrant® Brushed Bronze |
| | TT | Titanium |

KOHLER®

| TA-102 |
| --- |
| Revision Date: |

# Purist®
## 42" Grab Bar
## K-11896

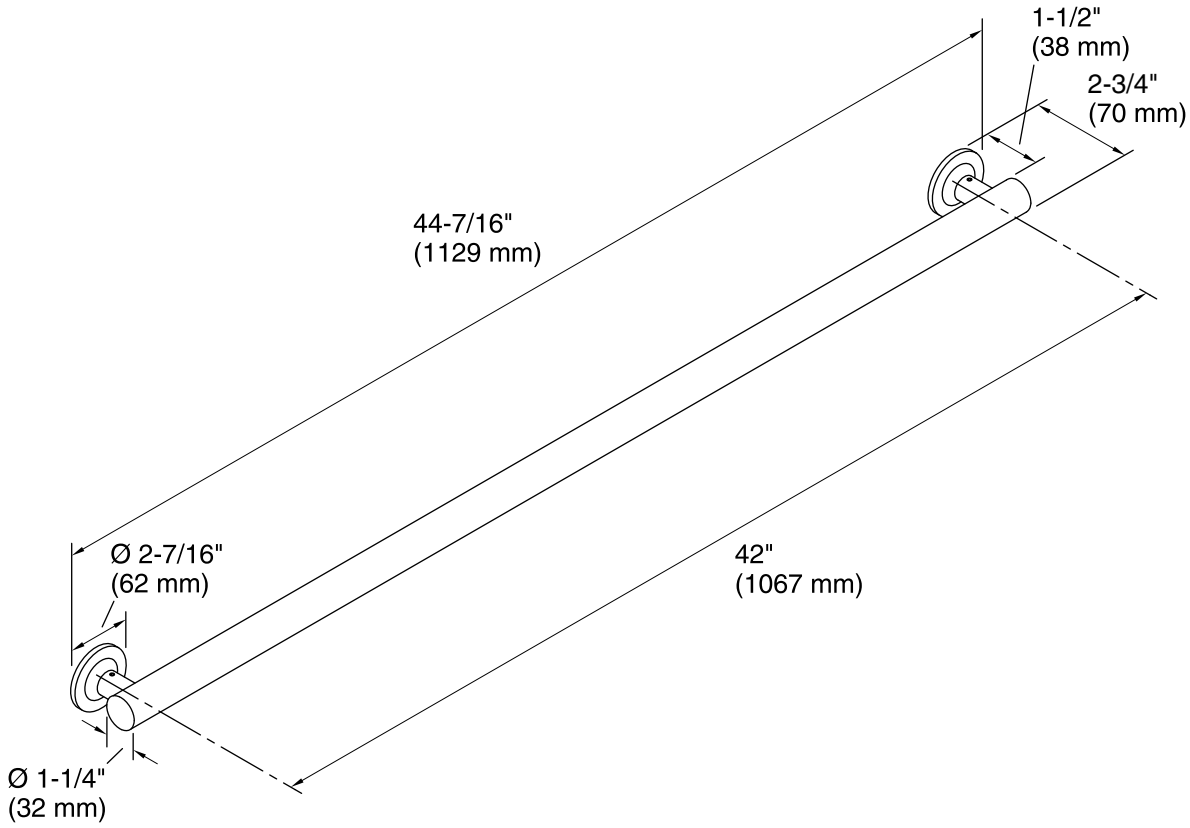


### Technical Information
All product dimensions are nominal.

### Notes
Measure your actual product for roughing-in details.

WARNING: Risk of personal injury. The wall plates on the grab bar must be mounted to a brace between the wall studs. This will ensure that the weight of the user is adequately supported.

ADA compliant when installed to the specific requirements of these regulations.

KOHLER®

TA-103
Revision Date:

# Purist®
36" Grab Bar
**K-11895**

## Features
- KOHLER finishes resist corrosion and tarnish.
- 36- inch bar.
- Contemporary styling matches any decor.
- Coordinates with other products in the Purist® collection.
- ADA compliant when installed per ADA guidelines.
- 38-7/16" (976 mm) x 2-3/4" (70 mm) x 2-7/16" (62 mm)

## Material
- Premium metal construction.

## Components
Additional included component/s: Installation hardware.

**ADA**

## Codes/Standards
ADA
ICC/ANSI A117.1

## KOHLER® Faucet Lifetime Limited Warranty
See website for detailed warranty information.

## Available Color/Finishes
*Color tiles intended for reference only.*

| Color | Code | Description |
|---|---|---|
| | S | Polished Stainless |
| | SN | Vibrant® Polished Nickel |
| | BN | Vibrant® Brushed Nickel |
| | BS | Brushed Stainless |
| | BV | Vibrant® Brushed Bronze |
| | TT | Titanium |

KOHLER®

TA-103

Revision Date:

# Purist®

36" Grab Bar

**K-11895**

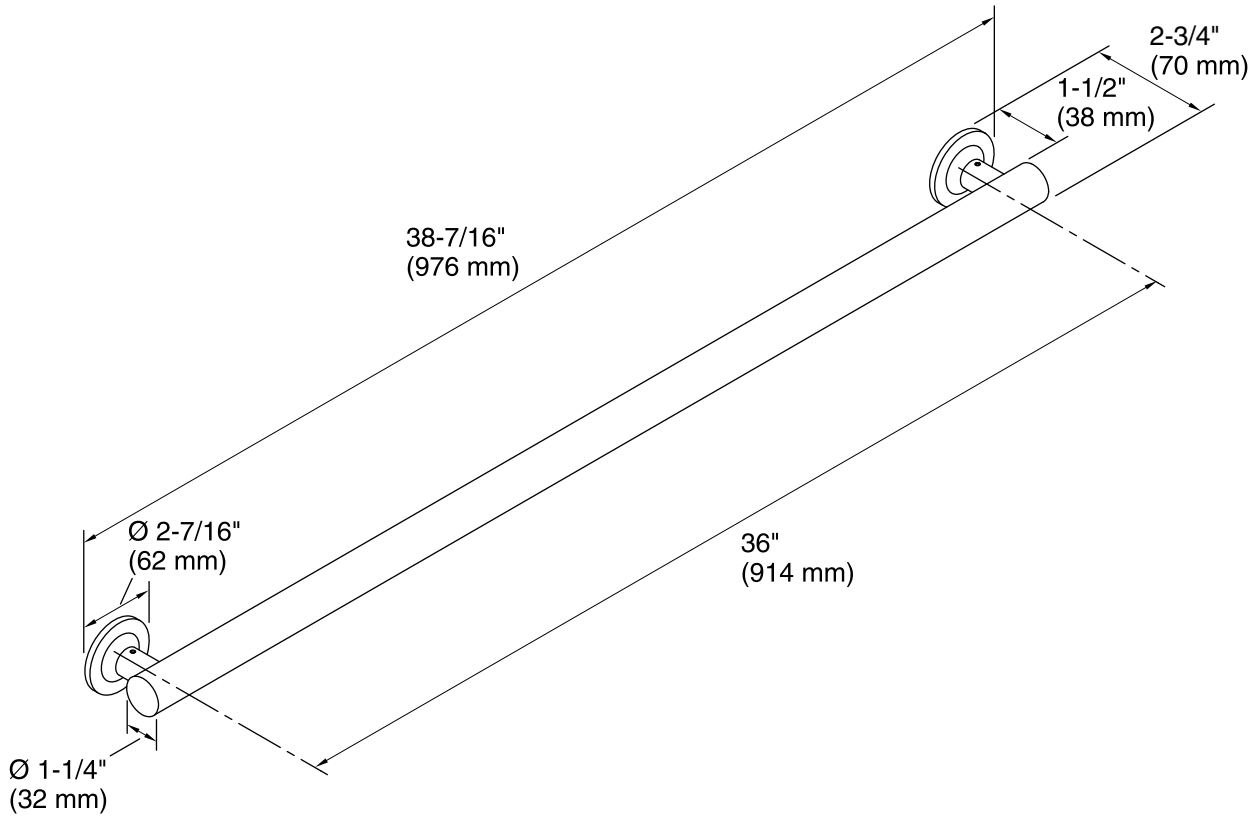


## Technical Information

All product dimensions are nominal.

## Notes

Measure your actual product for roughing-in details.

WARNING: Risk of personal injury. The wall plates on the grab bar must be mounted to a brace between the wall studs. This will ensure that the weight of the user is adequately supported.

ADA compliant when installed to the specific requirements of these regulations.

KOHLER®

TA-104
Revision Date:

# Purist®
18" Grab Bar
**K-11892**

## Features
- KOHLER finishes resist corrosion and tarnish.
- 18- inch bar.
- Contemporary styling matches any decor.
- Coordinates with other products in the Purist® collection.
- ADA compliant when installed per ADA guidelines.
- 20-7/16" (519 mm) x 2-3/4" (70 mm) x 2-7/16" (62 mm)

## Material
- Premium metal construction.

## Components
Additional included component/s: Installation hardware.

**ADA**

## Codes/Standards
ADA
ICC/ANSI A117.1

## KOHLER® Faucet Lifetime Limited Warranty
See website for detailed warranty information.

## Available Color/Finishes
*Color tiles intended for reference only.*

| Color | Code | Description |
|---|---|---|
| | S | Polished Stainless |
| | SN | Vibrant® Polished Nickel |
| | BN | Vibrant® Brushed Nickel |
| | BS | Brushed Stainless |
| | BV | Vibrant® Brushed Bronze |
| | TT | Titanium |

KOHLER®

TA-104
Revision Date:

# Purist®
18" Grab Bar
**K-11892**

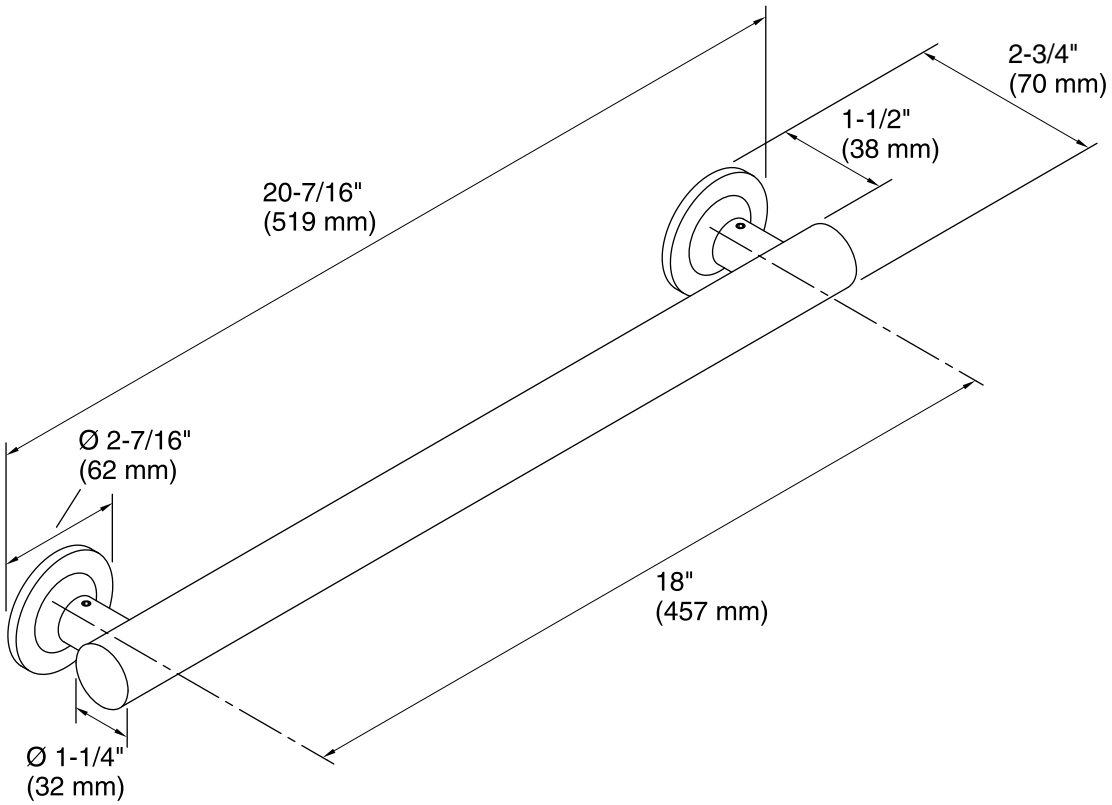


## Technical Information
All product dimensions are nominal.

## Notes
Measure your actual product for roughing-in details.

WARNING: Risk of personal injury. The wall plates on the grab bar must be mounted to a brace between the wall studs. This will ensure that the weight of the user is adequately supported.

ADA compliant when installed to the specific requirements of these regulations.

TA-201

Revision Date:

BOBRICK

Technical Data

# SURFACE-MOUNTED MULTI-ROLL TOILET TISSUE DISPENSER

# B-2888

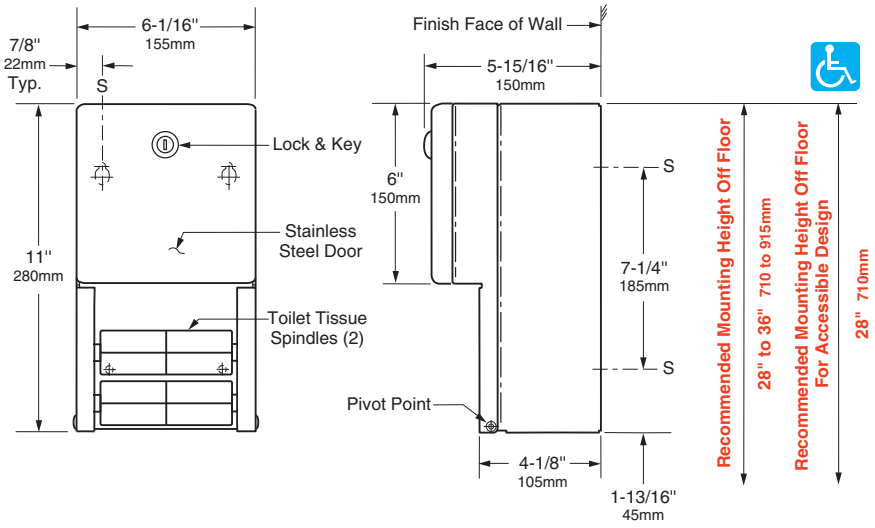


## MATERIALS:

**Cabinet —** 18-8, type-304, 22-gauge (0.8mm) stainless steel. All-welded construction. Exposed surfaces have satin finish.

**Door —** 18-8, type-304, 22-gauge (0.8mm) stainless steel with 18-gauge (1.2mm) stainless steel door frame. Exposed surfaces have satin finish. Front of door is drawn, one-piece, seamless construction. Secured to cabinet with two rivets. Equipped with a tumbler lock keyed like other Bobrick washroom accessories.

**Dispensing Mechanism, Inner Housing and Cam —** 18-8, type-304, 18-gauge (1.2mm) stainless steel.

**Spindles (2) —** Heavy-duty, one-piece, molded ABS. Theft-resistant. Retained in dispensing mechanism when door is locked.

## OPERATION:

Unit holds two standard-core toilet tissue rolls up to 5-1/4" (133mm) diameter (1800 sheets). Tissue rolls are loaded and locked into dispensing mechanism. Extra roll automatically drops in place when bottom roll is depleted. Depleted rolls can only be removed after unlocking door.

## INSTALLATION:

For partitions with particleboard or other solid core, secure with four #10 x 5/8" (4.8 x 16mm) sheet-metal screws (not furnished) at points indicated by an *S*, or provide through-bolts, nuts, and washers.

For hollow-core metal partitions, provide solid backing into which sheet-metal screws can be secured. If two units are installed back-to-back, then provide threaded sleeves and machine screws for the full thickness of partition.

For plaster or dry wall construction, provide concealed backing to comply with local building codes, then secure unit with sheet-metal screws.

For other wall surfaces, provide fiber plugs or expansion shields for use with sheet-metal screws or provide 3/16" (5mm) toggle bolts or expansion bolts.

## SPECIFICATION:

Surface-mounted multi-roll toilet tissue dispenser shall be type-304 stainless steel with all-welded construction, including dispensing mechanism, inner housing and cam; exposed surfaces shall have satin finish. Front of toilet tissue dispenser door shall be drawn, one-piece, seamless construction. Door shall be secured to cabinet with two rivets and equipped with a tumbler lock keyed like other Bobrick washroom accessories. Unit shall dispense two standard-core toilet tissue rolls up to 5-1/4" (133mm) diameter (1800 sheets). Extra roll shall automatically drop in place when bottom roll is depleted. Unit shall be equipped with two theft-resistant, heavy-duty, one-piece, molded ABS spindles.

**Surface-Mounted Multi-Roll Toilet Tissue Dispenser shall be Model B-2888 of Bobrick Washroom Equipment, Inc., Clifton Park, New York; Jackson, Tennessee; Los Angeles, California; Bobrick Washroom Equipment Company, Scarborough, Ontario; Bobrick Washroom Equipment Pty. Ltd., Australia; and Bobrick Washroom Equipment Limited, United Kingdom.**

The illustrations and descriptions herein are applicable to production as of the date of this Technical Data Sheet.
The manufacturer reserves the right to, and does from time to time, make changes and improvements in designs and dimensions.

Revised 4/27/11 Printed in U.S.A.

© 2011 by Bobrick Washroom Equipment, Inc.

BOBRICK

Technical Data

# SURFACE-MOUNTED TOILET TISSUE DISPENSER AND UTILITY SHELF

TA-202

Revision Date:

# B-2840

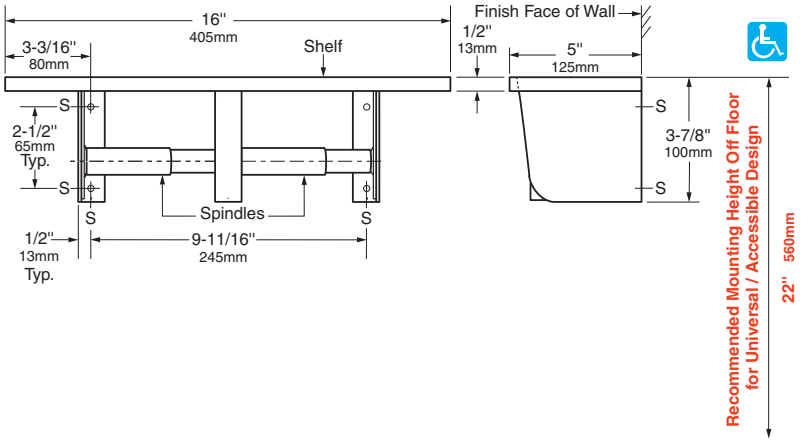


## MATERIALS:

**Shelf** — 18-8, type-304, 20-gauge (1.0mm) stainless steel with satin finish. 1/2" (13mm) return edges for maximum rigidity. Front edge is hemmed for safety.

**Mounting Brackets** — 18-8, type-304, 18-gauge (1.2mm) stainless steel with satin finish. Welded to shelf.

**Toilet Tissue Dispensers (2)** — Support brackets are 18-8, type-304, 18-gauge (1.2mm) stainless steel with satin finish. Equipped with two chrome-plated plastic spindles, each with a heavy-duty internal spring.

## OPERATION:

Close clearance of support brackets deters removal of toilet tissue rolls until they are depleted. Unit holds two standard-core toilet tissue rolls up to 5-1/2" (140mm) diameter (1800 sheets).

*Designer's Note:* It is recommended that one full toilet tissue roll remain wrapped or taped until the other roll has been depleted to avoid wasting the ends of both rolls.

## INSTALLATION:

Mount unit on wall or partition with four #7 x 1-1/2" (3.8 x 38mm) sheet-metal screws (not furnished) at points indicated by an *S*.

For partitions with particle-board or other solid core, provide sheet-metal screws or through-bolts, nuts, and washers.

For hollow-core metal partitions, provide solid backing into which sheet-metal screws can be secured. If two units are installed back-to-back, then provide threaded sleeves and machine screws for the full thickness of partition.

For plaster or dry wall construction, provide concealed backing to comply with local building codes, then secure unit with #7 x 1-1/2" (3.8 x 38mm) or longer sheet-metal screws.

For other wall surfaces, provide #7 x 1-1/2" (3.8 x 38mm) sheet-metal screws and fiber plugs or expansion shields, or provide 1/8" (3mm) toggle bolts or expansion bolts.

## SPECIFICATION:

Surface-mounted toilet tissue dispenser and utility shelf shall be type-304 stainless steel with satin finish. Shelf shall have 1/2" (13mm) return edges with front edge hemmed for safe handling. *Spindles shall be chrome-plated plastic with heavy-duty internal spring and shall hold standard-core toilet tissue rolls up to 5-1/2" (140mm) diameter (1800 sheets).

**Theft-resistant spindle (part No. 283-604) available as a replacement part.*

**Surface-Mounted Toilet Tissue Dispenser And Utility Shelf shall be Model B-2840 of Bobrick Washroom Equipment, Inc., Clifton Park, New York; Jackson, Tennessee; Los Angeles, California; Bobrick Washroom Equipment Company, Scarborough, Ontario; Bobrick Washroom Equipment Pty. Ltd., Australia; and Bobrick Washroom Equipment Limited, United Kingdom.**

The illustrations and descriptions herein are applicable to production as of the date of this Technical Data Sheet.
The manufacturer reserves the right to, and does from time to time, make changes and improvements in designs and dimensions.

Revised 5/06 Printed in U.S.A.

© 2006 by Bobrick Washroom Equipment, Inc.

HAUS byBathSource

# Robe Hook

TA-402-BA
Revision Date:

Hotelier Collection
BA-6252 -

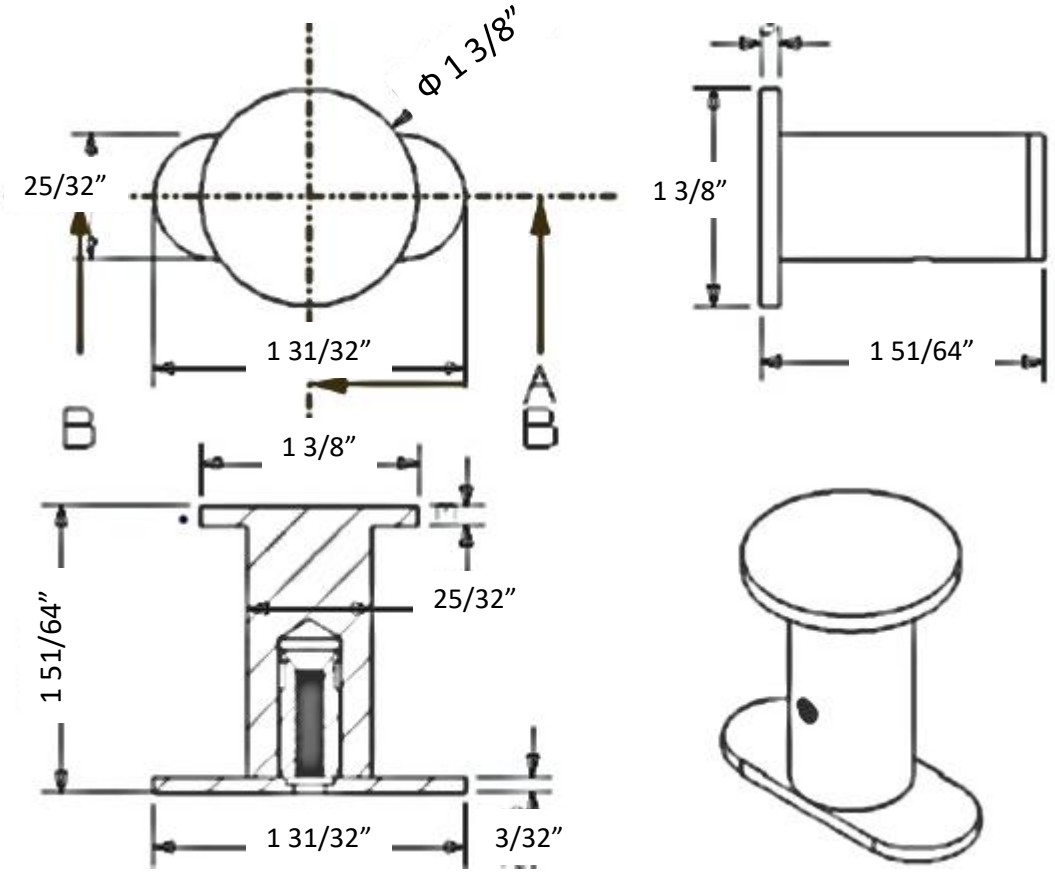




- ❑ Brushed Nickel -BRN
- ❑ Polished Chrome -PC

**Specifications:**
- Solid Brass Construction
- Rust Proof-No Zinc!
- Triple Plated Finishing Process
- Custom design with clean lines
- Hardware included

Sales@OneBathSource.com
T (800) 614-2035 | F 888.386.2988
WWW.OneBathSource.com

TA-402-MO
Revision Date:

# ALIGN™ Technical Specification

## Robe Hook YB0403

## Stock Numbers:

- **YB0403CH – Robe Hook**
  Chrome Finish
- **YB0403BN – Robe Hook**
  Brushed Nickel Finish

## Materials:

**Robe Hook** is constructed of zinc.

## Dimensions:

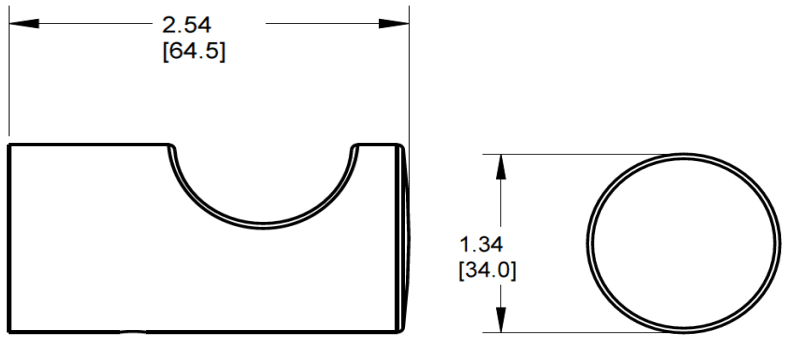


## Installation Instructions:

1) Position the mounting template on the wall in the desired location.
2) Using a level, align the template and tape it to the wall.
3) Drill two 1/4" holes at each mounting post location that corresponds to your product. (We recommend using the horizontal holes for drywall installation).
4) Remove the template from the wall.
5) Lightly tap anchors until flush with the wall.
6) Remove mounting posts from the product assemblies by loosening each setscrew.
7) One at a time, place each mounting post over anchors (notch facing downward) and insert screws through post into anchors.
8) Tighten screws.

## Cleaning Instructions:

To preserve the fine finish of this product, clean only with a soft damp cloth. Dry well. Do not use commercial or abrasive cleaners.

**Stock Number:** YB0403 Robe Hook
By Creative Specialties


Creative Specialties® International
a Division of MOEN
Buy it for looks. Buy it for life.®

25300 AL MOEN DRIVE • NORTH OLMSTED, OH 44070
CORPORATE HEADQUARTERS: (800) 321-8809 • FAX: (800) 848-6636
INTERNATIONAL: (440) 962-2000 • FAX: (440) 962-2726
CUSTOMER SERVICE (USA): 800-882-0116 • FAX: (888) 379-2720
WWW.MOEN.COM


©Copyright Creative Specialties International

Literature # BA1218

02/25/2014 SPC14090 50000015470
Released 01

BOBRICK

Technical Data

# HEAVY-DUTY CLOTHES HOOK WITH CONCEALED MOUNTING

# B-2116

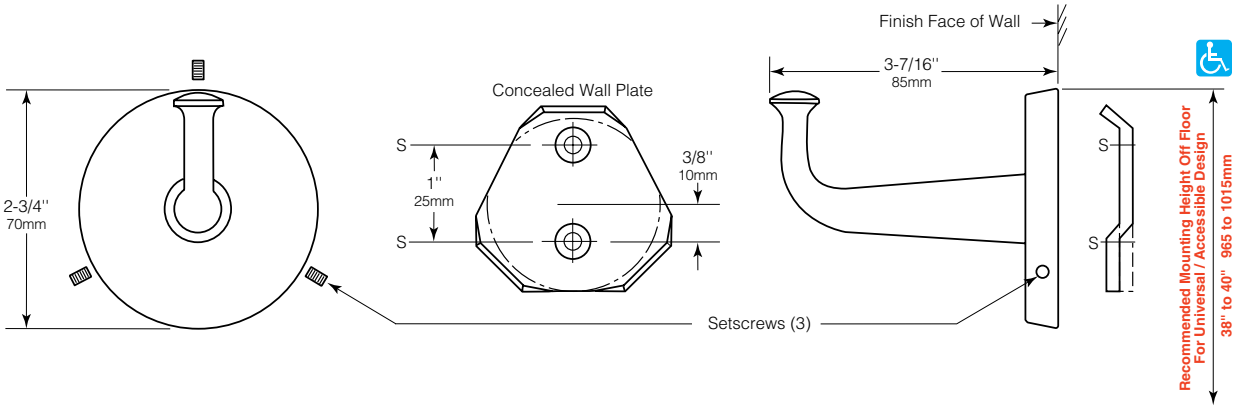


## MATERIALS:

**Hook and Flange** — One-piece brass casting with satin nickel-plated finish. Withstands 300-lb (136-kg) downward pull if properly installed. Secured to concealed wall plate with three stainless steel setscrews.

**Concealed Wall Plate** — 12-gauge (2.7mm) case hardened steel.

## INSTALLATION:

Secure wall plate to wall with two sheet-metal screws, furnished by manufacturer, at points indicated by an *S*. For plaster or dry wall construction, provide concealed backing to comply with local building codes, then secure mounting plate with screws furnished. For other wall surfaces, provide fiber plugs or expansion shields for use with screws furnished, or provide toggle bolts or expansion bolts. Secure hook to wall plate by tightening three stainless steel setscrews in flange.

## SPECIFICATION:

Heavy-duty clothes hook with concealed mounting shall be one-piece brass casting with satin nickel-plated finish. Hook shall be secured to a concealed wall plate with three stainless steel setscrews. Hook shall withstand 300-lb (136-kg) downward pull when properly installed.

**Heavy-Duty Robe Hook With Concealed Mounting shall be Model B-2116 of Bobrick Washroom Equipment, Inc., Clifton Park, New York; Jackson, Tennessee; Los Angeles, California; Bobrick Washroom Equipment Company, Scarborough, Ontario; Bobrick Washroom Equipment Pty. Ltd., Australia; and Bobrick Washroom Equipment Limited, United Kingdom.**

The illustrations and descriptions herein are applicable to production as of the date of this Technical Data Sheet.
The manufacturer reserves the right to, and does from time to time, make changes and improvements in designs and dimensions.

Revised 6/30/15 Printed in U.S.A.
© 2015 by Bobrick Washroom Equipment, Inc.

BOBRICK

Technical Data

# SOLID PHENOLIC FOLDING SHOWER/DRESSING AREA SEAT

TA-702

Revision Date:

# B-5191

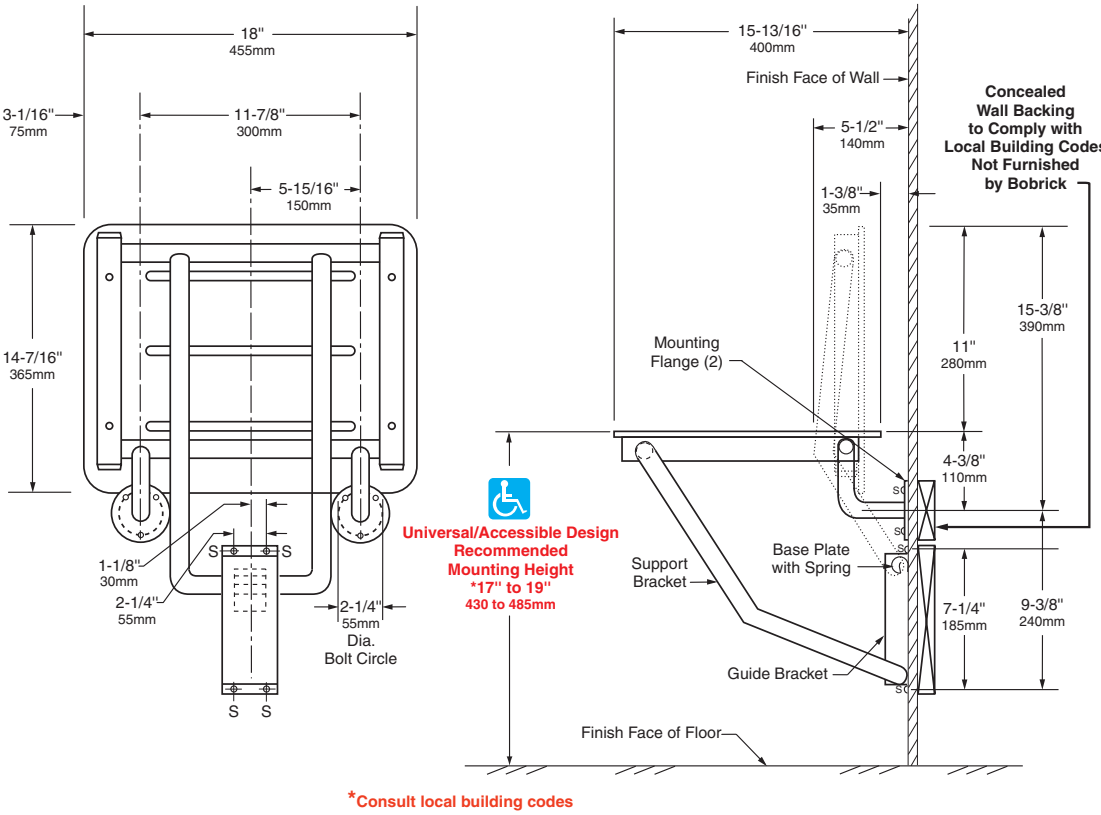


*Consult local building codes

## MATERIALS:

**Seat** — One-piece, 5/16" (8mm) thick, solidly fused plastic laminate with matte-finish melamine surfaces, ivory-colored face sheets, and black phenolic-resin core that are integrally bonded — cannot delaminate. Integral slots for water drainage. Secured to frame with stainless steel carriage bolts and acorn nuts.

**Frame** — 18-8, type-304, stainless steel with satin finish. 16-gauge (1.6mm), 1-1/4" (30mm) square tubing and 18-gauge (1.2mm), 1" (25mm) diameter seamless tubing.

**Mounting Flanges (2)** — 18-8, type-304, 3/16" (5mm) thick stainless steel with satin finish. 3" (75mm) diameter with three mounting screw holes.

**Baseplate** — 18-8, type-304, heavy-gauge stainless steel.

**Spring** — 17-7, type-301, 24-gauge (0.6mm) stainless steel. Spot-welded to baseplate.

**Guide Bracket** — 18-8, type-304, 16-gauge (1.6mm) stainless steel with satin finish.

continued . . .

The illustrations and descriptions herein are applicable to production as of the date of this Technical Data Sheet.
The manufacturer reserves the right to, and does from time to time, make changes and improvements in designs and dimensions.

Rev. 08/09/13S/D Printed in U.S.A.
© 2013 by Bobrick Washroom Equipment, Inc.

## OPERATION:

Shower seat can be folded up against the wall when not in use. The spring at the top of baseplate locks seat into upright position until released by pulling the top of seat away from wall. Support system with guide bracket allows varying mounting heights and leaves floor clear for easier cleaning. Nonporous solid phenolic seat has slots to permit water to drain, does not splinter or require oiling, and will not support growth of bacteria. Slotless round-head carriage bolts and acorn nuts provide additional safety to user. Bobrick shower seats, when properly installed, have sufficient strength to support 500 lbs., (227 kg) complying with accessible design guidelines (including ADAAG in the U.S.A.).

## INSTALLATION:

Secure unit to wall at points indicated by an *S*, with the two mounting flanges located at top and the baseplate and guide bracket below. The bottom of support bracket must be positioned between the baseplate and guide bracket before they are secured to wall or partition. Mounting height of shower seat must comply with local building codes.

For stud walls, provide concealed backing to comply with local building codes and secure with #14 x 2-1/2" (6.3 x 65mm) stainless steel sheet-metal screws furnished by manufacturer.

For prefabricated shower stalls, provided adequate backing by the shower stall manufacturer. Secure with #14 x 2-1/2" (6.3 x 65mm) stainless steel mounting screws furnished by manufacturer. Bobrick offers a mounting kit for installing shower seats. For additional mounting kits please order 252-30. One mounting kit is required for each flange.

For masonry walls, provide fiber plugs or expansion shields for use with furnished sheet-metal screws, or provide 1/4" (6mm) toggle bolts or expansion bolts.

## INSTALL SAFETY PLATE TO WALL:

Safety Plate is to be mounted on wall near Shower Seat in order to properly advise users of the Seat's weight restrictions. Correct installation of the Safety Plate will ensure that the Shower Seat meets A.N.S.I. Standards.

Permanently affix Safety Plate to wall on either side of the Shower Seat at a minimum height of 30" (760mm). If mounted above Seat, the Plate must be high enough so that it is not covered when Seat is on the up position. Mounting screws (4) are recommended, but double-sided tape on rear of Plate may be used for very smooth, non-porous surfaces.

**SAFETY WARNING: Shower seats are no stronger than the anchors and walls to which they are attached and must be firmly secured in order to support the loads for which they are intended. Consult and comply with local building codes. To avoid potential injury, the building owner or maintenance personnel should remove the shower seat from service if the shower seat is not adequately secured to the wall. Unit shall support static loads of up to 500 lbs (227 kg) when properly installed and used. To avoid potential seat malfunction, DO NOT use seat if weight exceeds 500 lbs (227 kg).**

## SPECIFICATION:

Folding shower seat shall have a frame constructed of type-304, satin-finish stainless steel that consists of 16-gauge (1.6mm), 1-1/4" (30mm) square tubing and 18-gauge (1.2mm), 1" (25mm) diameter seamless tubing. Seat shall be one-piece, 5/16" (8mm) thick, solidly fused plastic laminate with matte-finish melamine surfaces, ivory-colored face sheets, and black phenolic-resin core; secured to frame with stainless steel carriage bolts and acorn nuts. Shower seat shall be equipped with two 3" (75mm) diameter mounting flanges constructed of type-304, 3/16" (5mm) thick, satin-finish stainless steel; a guide bracket constructed of type-304, 16-gauge (1.6mm), satin-finish stainless steel; and a spring constructed of type-301, 24-gauge (0.6mm) stainless steel that is spot-welded to a baseplate of type-304, heavy-gauge stainless steel. Seat shall be able to lock in upright position when not in use. Shower seat shall comply with accessible design guidelines (including ADAAG in the U.S.A.).

**Folding Shower Seat shall be Model B-5191 of Bobrick Washroom Equipment, Inc., Clifton Park, New York; Jackson, Tennessee; Los Angeles, California; Bobrick Washroom Equipment Company, Scarborough, Ontario; Bobrick Washroom Equipment Pty. Ltd., Australia; and Bobrick Washroom Equipment Limited, United Kingdom.**

The illustrations and descriptions herein are applicable to production as of the date of this Technical Data Sheet.
The manufacturer reserves the right to, and does from time to time, make changes and improvements in designs and dimensions.

B-5191 r08/09/13 Printed in U.S.A.
© 2013 by Bobrick Washroom Equipment, Inc.

BOBRICK

Technical Data

# SOLID PHENOLIC FOLDING SHOWER/DRESSING AREA SEAT

# B-5191

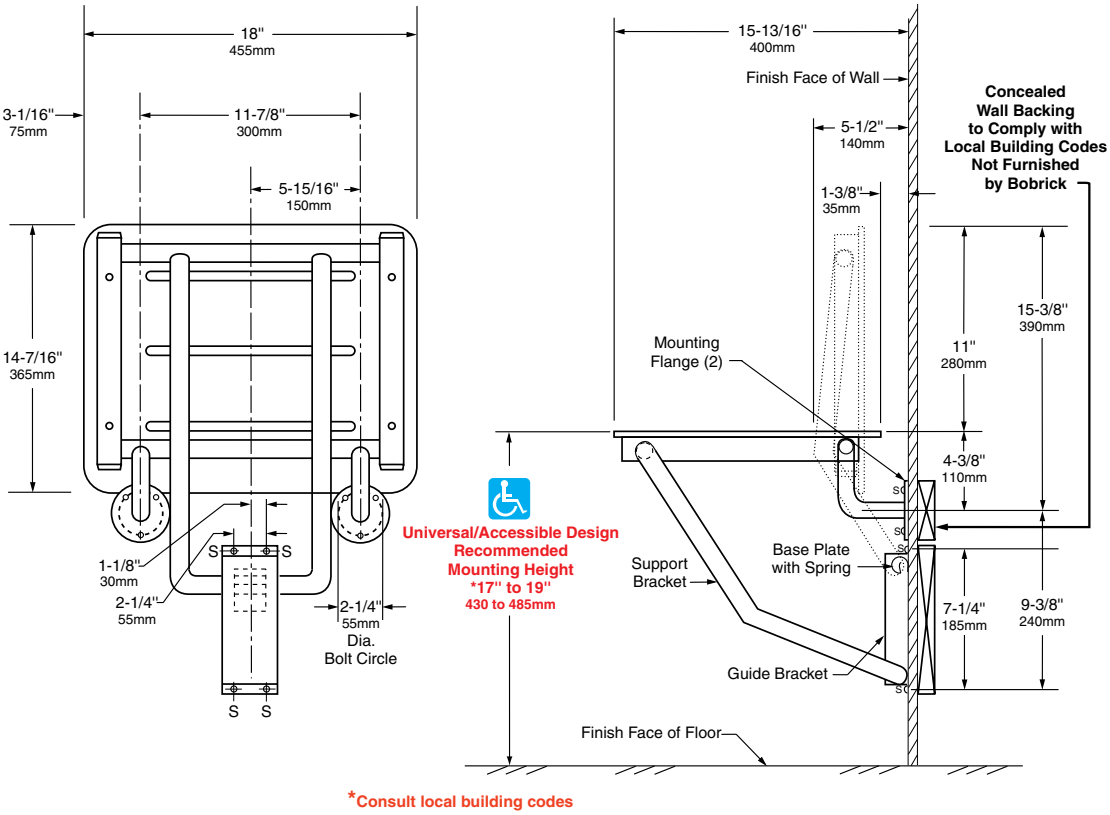


*Consult local building codes

## MATERIALS:

**Seat** — One-piece, 5/16" (8mm) thick, solidly fused plastic laminate with matte-finish melamine surfaces, ivory-colored face sheets, and black phenolic-resin core that are integrally bonded — cannot delaminate. Integral slots for water drainage. Secured to frame with stainless steel carriage bolts and acorn nuts.

**Frame** — 18-8, Type-304, stainless steel with satin finish. 16-gauge (1.6mm), 1-1/4" (30mm) square tubing and 18-gauge (1.2mm), 1" (25mm) diameter seamless tubing.

**Mounting Flanges (2)** — 18-8, Type-304, 3/16" (5mm) thick stainless steel with satin finish. 3" (75mm) diameter with three mounting screw holes.

**Baseplate** — 18-8, Type-304, heavy-gauge stainless steel.

**Spring** — 17-7, Type-301, 24-gauge (0.6mm) stainless steel. Spot-welded to baseplate.

**Guide Bracket** — 18-8, Type-304, 16-gauge (1.6mm) stainless steel with satin finish.

continued . . .

The illustrations and descriptions herein are applicable to production as of the date of this Technical Data Sheet.
The manufacturer reserves the right to, and does from time to time, make changes and improvements in designs and dimensions.

Rev. 1/08/18S/D Printed in U.S.A.
© 2018 by Bobrick Washroom Equipment, Inc.

## OPERATION:

Shower seat can be folded up against the wall when not in use. The spring at the top of baseplate holds seat into upright position until released by pulling the top of seat away from wall. Bobrick Folding Shower Seats are not spring-loaded. The seats do not return automatically to the upright position after use. Support system with guide bracket allows varying mounting heights and leaves floor clear for easier cleaning. Nonporous solid phenolic seat has slots to permit water to drain, does not splinter or require oiling, and will not support growth of bacteria. Slotless round-head carriage bolts and acorn nuts provide additional safety to user. Bobrick shower seats, when properly installed, have sufficient strength to support 500 lbs., (227 kg) complying with accessible design guidelines (including ADAAG in the U.S.A.).

## INSTALLATION:

Secure unit to wall at points indicated by an *S*, with the two mounting flanges located at top and the baseplate and guide bracket below. The bottom of support bracket must be positioned between the baseplate and guide bracket before they are secured to wall or partition. Mounting height of shower seat must comply with local building codes.

For stud walls, provide concealed backing to comply with local building codes and secure with #14 x 2-1/2" (6.3 x 65mm) stainless steel sheet-metal screws furnished by manufacturer.

For prefabricated shower stalls, provided adequate backing by the shower stall manufacturer. Secure with #14 x 2-1/2" (6.3 x 65mm) stainless steel mounting screws furnished by manufacturer. Bobrick offers a mounting kit for installing shower seats. For additional mounting kits please order 252-30. One mounting kit is required for each flange.

For masonry walls, provide fiber plugs or expansion shields for use with furnished sheet-metal screws, or provide 1/4" (6mm) toggle bolts or expansion bolts.

## INSTALL SAFETY PLATE TO WALL:

Safety Plate is to be mounted on wall near Shower Seat in order to properly advise users of the Seat's weight restrictions. Correct installation of the Safety Plate will ensure that the Shower Seat meets A.N.S.I. Standards.

Permanently affix Safety Plate to wall on either side of the Shower Seat at a minimum height of 30" (760mm). If mounted above Seat, the Plate must be high enough so that it is not covered when Seat is on the up position. Mounting screws (4) are recommended, but double-sided tape on rear of Plate may be used for very smooth, non-porous surfaces.

**SAFETY WARNING: Shower seats are no stronger than the anchors and walls to which they are attached and must be firmly secured in order to support the loads for which they are intended. Consult and comply with local building codes. To avoid potential injury, the building owner or maintenance personnel should remove the shower seat from service if the shower seat is not adequately secured to the wall. Unit shall support static loads of up to 500 lbs (227 kg) when properly installed and used. To avoid potential seat malfunction, DO NOT use seat if weight exceeds 500 lbs (227 kg).**

## SPECIFICATION:

Folding shower seat shall have a frame constructed of Type-304, satin-finish stainless steel that consists of 16-gauge (1.6mm), 1-1/4" (30mm) square tubing and 18-gauge (1.2mm), 1" (25mm) diameter seamless tubing. Seat shall be one-piece, 5/16" (8mm) thick, solidly fused plastic laminate with matte-finish melamine surfaces, ivory-colored face sheets, and black phenolic-resin core; secured to frame with stainless steel carriage bolts and acorn nuts. Shower seat shall be equipped with two 3" (75mm) diameter mounting flanges constructed of Type-304, 3/16" (5mm) thick, satin-finish stainless steel; a guide bracket constructed of Type-304, 16-gauge (1.6mm), satin-finish stainless steel; and a spring constructed of Type-301, 24-gauge (0.6mm) stainless steel that is spot-welded to a baseplate of Type-304, heavy-gauge stainless steel. Seat shall be able to lock in upright position when not in use. Shower seat shall comply with accessible design guidelines (including ADAAG in the U.S.A.).

**Folding Shower Seat shall be Model B-5191 of Bobrick Washroom Equipment, Inc., Clifton Park, New York; Jackson, Tennessee; Los Angeles, California; Bobrick Washroom Equipment Company, Scarborough, Ontario; Bobrick Washroom Equipment Pty. Ltd., Australia; and Bobrick Washroom Equipment Limited, United Kingdom.**

The illustrations and descriptions herein are applicable to production as of the date of this Technical Data Sheet.
The manufacturer reserves the right to, and does from time to time, make changes and improvements in designs and dimensions.

B-5191 r1/08/18 Printed in U.S.A.
© 2018 by Bobrick Washroom Equipment, Inc.

dyson airblade V

TA-800-DY
Revision Date:

AB 12

# LOW VOLTAGE AND HIGH VOLTAGE TECHNICAL SPECIFICATION

## Electrical

Input voltage: Low Voltage = 110-127 V, High Voltage = 208-240 V

Frequency: Low Voltage = 50 or 60 Hz, subject to voltage (85-115 V at 50 Hz; 85-130 V at 60 Hz); High Voltage = 50 & 60 Hz

Rated power: 1400 W

Motor type: Dyson digital motor – V4 brushless DC Motor

Motor switching rate: 6,100 per second

Motor speed: 92,000 rpm

Amp: Recommended dedicated 15 amp circuit,
Low voltage = 11.7 amps at 120V, High voltage = 7.3 amps

Operating temperature range: 32°– 104°F

Heater type: None

Standby power consumption: Less than 0.5 W

## Construction

Casing construction: Polycarbonate ABS casing

Antimicrobial coating type: AB12 (Sprayed Nickel) Antimicrobial additive in paint. AB12 (White) Antimicrobial molded additive

Color finish: AB12 Sprayed Nickel molded plastic or AB12 White molded plastic.

Back plate/mounting bracket construction: ABS/PBT Plastic

Exterior screw type: Anti-tamper M4 Pin-Hex

Water ingress protection to IP24

## Filter

Double-life HEPA filter (glass fiber and fleece prelayer)

Removes 99.97% of bacteria as small as 0.3 microns

## Operation

Touch-free proximity capacitive sensor.

Hand dry time measurement: 12 seconds*

Operation lock-out period: 30 seconds

Airspeed at apertures: 420 mph

Maximum Altitude: 2,000m/6,561 ft.

Operating airflow: Up to 7.39 gal/sec and up to 59.3 CFM

Rated operating noise power: 85 db(A)

## Logistics

Net weight: 6.17 lbs.

Packaged weight: 8.81 lbs.

Packaged dimensions: (H) 5¾" × (W) 17⅞" × (D) 10¾"

Unit barcodes:
Sprayed Nickel – Low Voltage: 885609001463, High Voltage: 885609006178;
White – Low Voltage: 879957009073, High Voltage: 885609006161

## Standard warranty

5 year parts and 5 year limited labor warranty

## Accreditations

Carbon Trust

NSF International

ADA compliant

Contributes to LEED certification

**Product range** (Select one)

**AB12 Sprayed Nickel**

**Part number/SKU**
☐ Low Voltage: 304662-01
☐ High Voltage: 301827-01

**AB12 White**

**Part number/SKU**
☐ Low Voltage: 304661-01
☐ High Voltage: 301825-01

CARBON TRUST CO2 MEASURED

NSF TESTED. CERTIFIED. HYGIENIC

U.S. GREEN BUILDING COUNCIL LEED USGBC

UL-507 LISTED

The Carbon Reduction Label is the registered trade mark of the Carbon Trust.
The NSF logo is the registered trade mark of NSF International.

*Dry time measured using Dyson test method 769 based on NSF P335 using a measurement of 0.1g residual moisture.

For more information, please contact Dyson: **1-888-397-6622, www.dysonairblade.com, airbladeinfo@dyson.com**

# dyson airblade V

TA-800-DY
Revision Date:

## TECHNICAL SPECIFICATION

AB 12

REAR ELEVATION

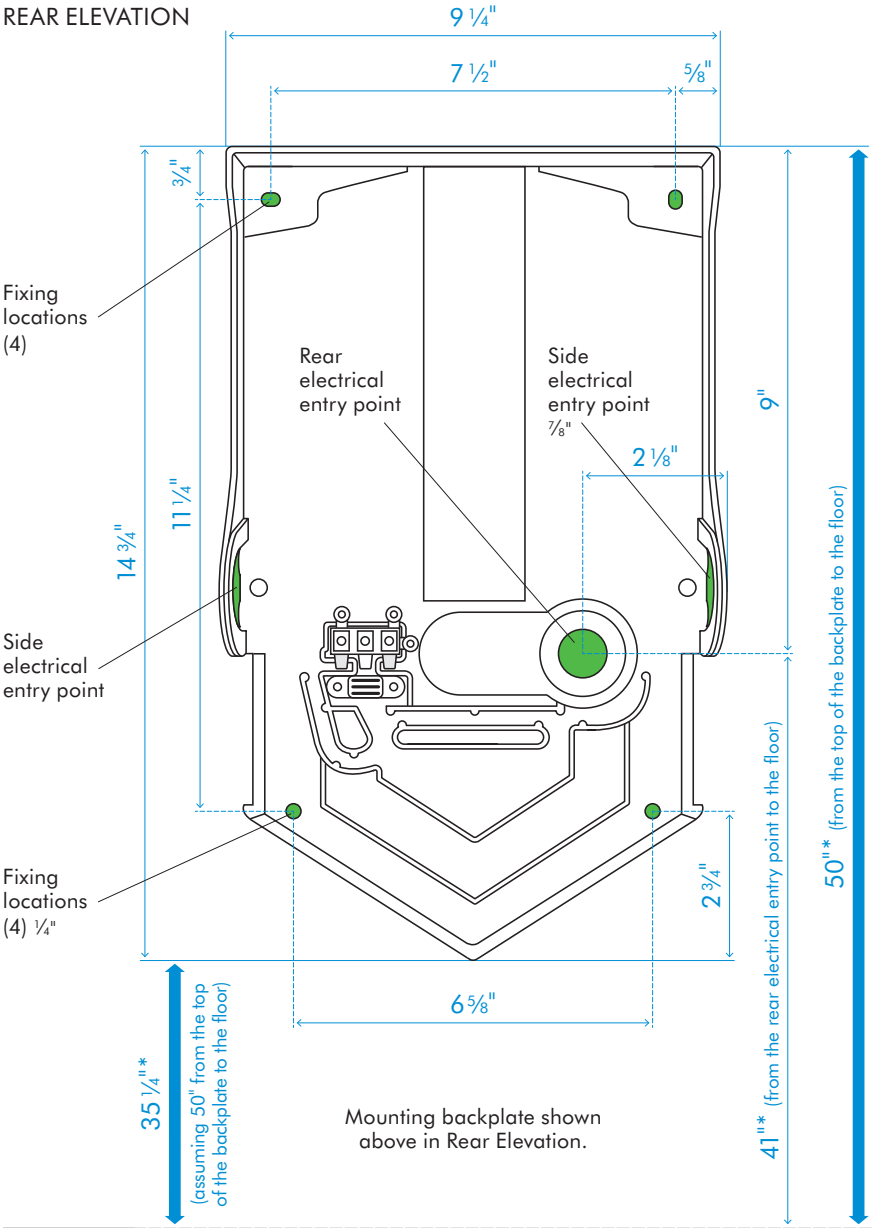


Mounting backplate shown above in Rear Elevation.

SIDE ELEVATION

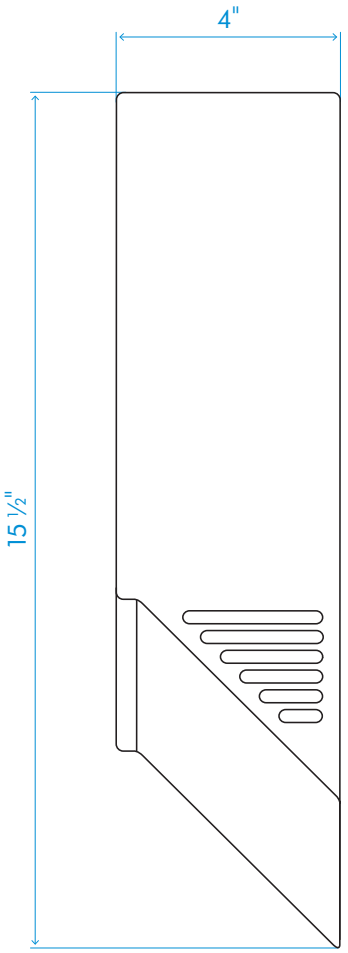


Machine fascia shown above in Side Elevation.

All dimensions shown in inches (+/– 3⁄16 inch).

Holes indicated in green are measured to the center of the hole.

**Machine dimensions**

Height: 15 ½" Width: 9 7⁄32" Depth: 4"

**Minimum clearance**

8 11⁄16" in clearance either side and 1 3⁄16" in clearance above machine.

*Please look into local guidelines for ADA compliance.

5721910 06.30.16 ©2016 DYSON

For more information, please contact Dyson: **1-888-397-6622, www.dysonairblade.com, airbladeinfo@dyson.com**

TA-800-EX
Revision Date:

# XLERATOR® HAND DRYER

MODELS: **XL - BW W GR C SB SI SP** OPTIONS: **-1.1N** (Noise Reduction Nozzle) **-H** (HEPA Filter) **-VOLTAGE** (See Chart)

**XL-BW**
White Thermoset Resin (BMC)

**XL-W**
White Epoxy Painted

**XL-GR**
Graphite Textured Painted

**XL-SP****
Custom Special Paint

**XL-SI*****
Custom Special Image

**XL-C**
Chrome Plated

**XL-SB**
Brushed Stainless Steel

TESTED TO PCR GUIDELINES

UL Environment published the first global Product Category Rules (PCR) for Hand Dryers and Excel is proud to have initiated and chaired the project. The PCR created evaluation methods through industry consensus that compare products' environmental impact and performance. Third Party testing results then enable specifiers and buyers to make a true apples-to-apples comparison of products and make more informed decisions.

* Dry time and energy use testing performed by SGS International on standard XLERATOR Hand Dryer with 0.8" nozzle to 0.25g or less of residual moisture, pursuant to the UL Environment Global Product Category Rules (PCR) for Hand Dryers.
** Special Paint powder-coated covers are available in many colors and textures.
*** Exclusive digital image technology allows for the addition of company, school or team logos with any color, design or a 'green message'.

## FOR ARCHITECT/ENGINEER APPROVAL

| | |
|---|---|
| Job Name | Date |
| Model Specified | Quantity |
| Variations Specified | |
| Customer/Wholesaler | |
| Contractor | |
| Architect | |

## PERFORMANCE

TESTED TO PCR GUIDELINES — **DRY TIME: 8 SECONDS*** | **ENERGY PER USE: 3.7 Wh***

Wattage: 1490 Watts (Heat On), 425 Watts (Heat Off)

Certifications:

## CONSTRUCTION

A. All covers will be fastened to a base plate by two chrome plated tamper-proof bolts. Cover shall be one of the following:
**Die-cast zinc alloy** - One-piece, heavy-duty, rib-reinforced, lightweight, unbreakable, rustproof and all exposed surfaces shall be bright chrome plated or finished with chip-proof, electrostatically applied epoxy paint.
**Bulk Molding Compound (BMC)** – White reinforced thermoset resin.
**Stainless Steel** – with a brushed finish.
**Special Image** – Digital image applied to die-cast or stainless steel covers using patented Kolorfusion Sublimation Decoration process.

B. Base plate shall be equipped with (3) 7/8" (22 mm) diameter holes, the bottom one is suitable for use with surface conduit.

C. All internal parts shall be coated according to Underwriters' Laboratories, Inc. requirements.

D. Entire mechanism shall be internally grounded.

E. Options
**HEPA Filtration System:** Filters 99.97% of bacteria at 0.3 microns from the air stream.
**1.1 Noise Reduction Nozzle:** Lowers decibel level 9 dB by reducing air deflection noise but increases dry time by approximately 3 seconds.

F. Accessories (optional)
**Microban® Antimicrobial Wall Guards**: 89W (White), 89B (Black), 89S (Stainless)
**XChanger Paper Towel Retrofit Kit**: 40550, 40551 (ADA Height)
**ADA Recess Kit**: 40502

## MECHANISM

A. Motor shall be a thermally protected, series commutated, through-flow discharge vacuum motor/blower (5/8 hp / 20,000 rpm) which provides air velocity of up to 19,000 LFM (linear feet per minute) at the air outlet and 16,000 LFM at the hands (4 inches [102 mm] below air outlet). Includes a washable metal mesh filter for more reliable performance.

B. Heating element (970 w) is constructed of Nichrome wire and mounted inside the blower housing, thereby being vandal resistant. It shall be protected by an automatic resetting thermostat, which shall open whenever air flow is cut off and shall close when flow of air is resumed. It shall produce an air temperature of up to 135°F (57°C) at a 72°F (22°C) ambient room temperature at the hands (4 inches [102 mm] below air outlet).

C. Control assembly is activated by an infrared optical sensor located next to the air outlet. The dryer shall operate as long as hands are under the air outlet. Control includes a speed and sound control mechanism, adjustable heat control with High, Medium, Low and Off settings and a filter sensor which is activated should the filter become clogged. There is a 35-second lockout feature if hands are not removed. Sensor equipped with externally visible Red LED light that flashes error codes to assist in troubleshooting.

## LIMITED WARRANTY

The dryer shall be guaranteed to be free from defects for a period of five (5) years. Warranty shall include labor performed at factory as well as the repair or exchange of defective parts, at manufacturer's option.

## QUANTITY RECOMMENDATIONS

One dryer for every two washbasins is sufficient for most applications. If restroom traffic is unusually heavy, we suggest one dryer per washbasin in small installations and two dryers for every three washbasins in larger installations. When a 54" washfountain is used, we suggest four to five dryers.

EXCEL DRYER, Inc.
East Longmeadow, MA
Phone 1.800.255.9235
Fax 1.413.525.2853
sales@exceldryer.com
www.exceldryer.com

SEPT 2016
16XLT0002

TA-800-EX

Revision Date:

# XLERATOR® HAND DRYER

MODELS: **XL - BW W GR C SB SI SP** OPTIONS: **-1.1N** (Noise Reduction Nozzle) **-H** (HEPA Filter) **-VOLTAGE** (See Chart)

## SIDE VIEW

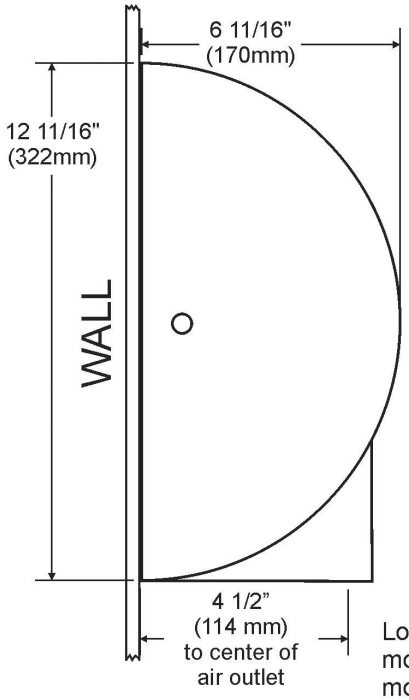


## FRONT VIEW FACING WALL

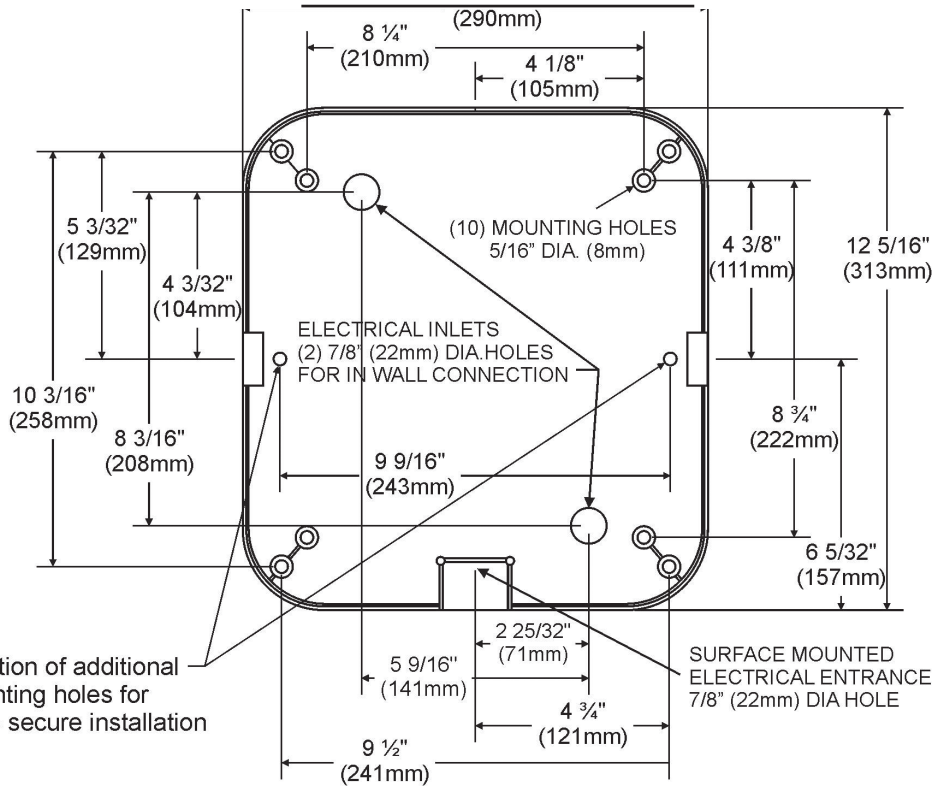


## DIMENSIONS

**Width** 11 3/4" (298 mm) **Height** 12 11/16" (322 mm) **Depth** 6 11/16" (170 mm)

## ACTIVATION

**Automatic Sensor Operated**

## MOUNTING

**Surface Mounted**

## WEIGHT

**XL-BW**: 15 lbs. (6.8 kgs.) **XL-SB**: 16 lbs. (7.26 kgs.) **XL-W, GR, C, SI, SP**: 17 lbs. (7.71 kgs.)

## ELECTRICAL

| VOLTS | AMPS | WATTS | NO HEAT AMPS | NO HEAT WATTS | HERTZ | |
|---|---|---|---|---|---|---|
| 110-120V | 11.3-12.2A | 1240-1450W | 4.3-4.5A | 460-530W | 50/60 Hz | c UL us |
| 208-277V | 5.6-6.2A | 1160-1490W | 2.0-2.2A | 425-500W | 50/60 Hz | c UL us |
| 230V | 6.1A | 1410W | 2.2A | 500W | 50 Hz | CE |

## SUGGESTED MOUNTING HEIGHTS

**from floor to bottom of dryer:**

| | | |
|---|---|---|
| Men | 45" | (114 cm) |
| Women | 43" | (109 cm) |
| Teenagers | 41" | (104 cm) |
| Small Children | 35" | (89 cm) |
| Accessible | 37" | (94 cm) |

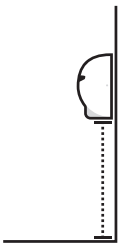

## OPTIONAL ADA-COMPLIANT RECESS KIT

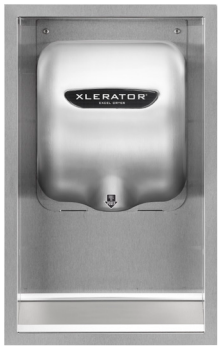


**Part # 40502**

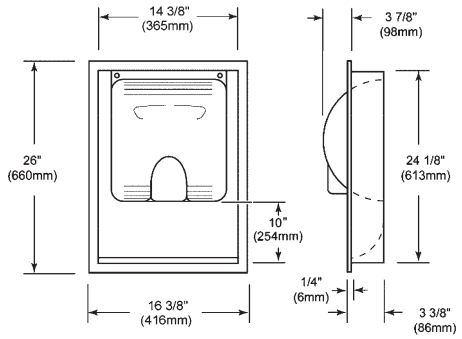


## DIMENSIONS

**Width** 16 3/8" (416 mm) **Height** 26" (660 mm) **Depth** 3 3/8" (86 mm)

## WEIGHT

11 lbs. (4.99 kgs.)

Bottom of recessed wall box should be 10" (254 mm) below suggested mounting height for dryer.

**EXCEL DRYER, Inc.**
**East Longmeadow, MA**
**Phone 1.800.255.9235**
**Fax 1.413.525.2853**
**sales@exceldryer.com**
**www.exceldryer.com**

TA-801

Revision Date:

BOBRICK

Technical Data

# ClassicSeries® SURFACE-MOUNTED NAPKIN/TAMPON VENDOR

# B-2706 SERIES

**Specify Model Required:**

- ❑ B-2706 25 Surface-Mounted 25¢ single-coin operation
- ❑ B-2706 50 Surface-Mounted 50¢ double-coin operation
- ❑ B-2706C Surface-Mounted Free no-coin operation

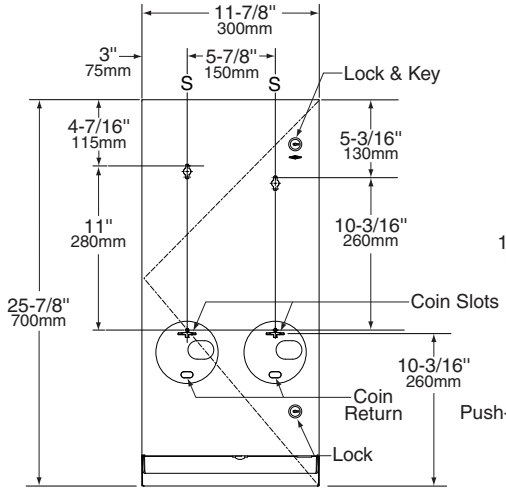


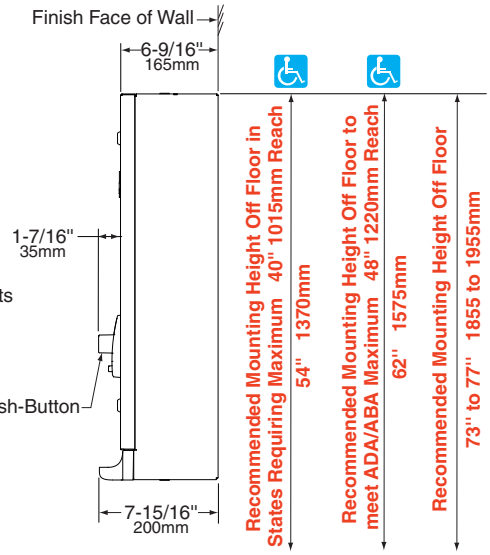


## MATERIALS:

**Cabinet —** 18-8, type-304, 18-gauge (1.2mm) stainless steel. All-welded construction.

**Door —** 18-8, type-304, 18-gauge (1.2mm) stainless steel with satin finish. Door has three 90° return edges and hemmed bottom edge. Secured to cabinet with a concealed full-length stainless steel piano-hinge. Equipped with two tumbler locks keyed like other Bobrick washroom accessories. Door has no brand-name advertising for products dispensed. Graphic symbols identify products dispensed and coin denomination.

**Coin Mechanisms (2) —** Impact-Resistant PC-ABS Push Buttons. Coin mechanisms can be converted in the field to any standard coin denomination (Free, 25¢ or 50¢) order Part No. 3706-250 for Free vend Conversion Kit. Accepts one or two quarters (U. S. or Canadian) as designated by factory setting. Coin Box is equipped with tumbler lock that opens with different key than furnished for door locks.

**Coin Return Push-Button (2) —** Impact-Resistant PC-ABS Push-Button cancels selection and returns coin into product tray.

**Product Tray —** Impact-Resistant PC-ABS, provides convenient access to dispensed product.

The illustrations and descriptions herein are applicable to production as of the date of this Technical Data Sheet.
The manufacturer reserves the right to, and does from time to time, make changes and improvements in designs and dimensions.

2706-200 r6/30/15 Printed in U.S.A.
© 2015 by Bobrick Washroom Equipment, Inc.

## OPERATION:

After coin is inserted in dispensing mechanism of patron's choice, pushing button dispenses boxed sanitary napkin or tampon tube. Mechanical operations; no batteries or electricity required. Coin slot of each dispensing mechanism is identified by a graphic symbol. Capacity: 20 sanitary napkins and 30 tampons. Coin slots are automatically blocked with a red indicator when supply is depleted. Coin Return Push-Button cancels the selection and returns coin into product tray. Wrong coins (penny, nickel, dime) by-pass mechanisms and drop into product tray. Vendor dispenses sanitary napkin packages measuring 2-7/8" x 3/4" x 4-1/8" to 3-1/8" x 1-1/8" x 4-3/8" (73 x 19 x 105mm to 80 x 29 x 111mm) and tampon tubes measuring 4-5/8" long x 9/16" diameter minimum to 5-1/8" long x 3/4" diameter maximum (118 x 14 to 130 x 19mm).

## INSTALLATION:

Mount unit on wall with four sheet-metal screws (not furnished) at points indicated by an *S*. For plaster or dry wall construction, provide concealed backing to comply with local building codes, then secure unit with sheet-metal screws (not furnished). For other wall construction, provide fiber plugs or expansion shields for use with sheet-metal screws, or provide 1/8" (3mm) toggle bolts or expansion bolts. If unit projects above top of wainscot, provide aluminum channel or other filler to eliminate gap between unit and finish face of wall.

## SPECIFICATION:

Surface-Mounted napkin/tampon vendor shall combine two dispensing mechanisms in one cabinet to provide sanitary napkins and tampons at user's option. Mechanical operations; no batteries or electricity required. Dispensing mechanisms shall be pre-set at factory for _____ (insert one: Free, 25¢ or 50¢) operation, but shall be convertible in the field to allow the change of coin denomination without removing unit from wall. Door shall be furnished with graphics indicating specified coin denomination. Unit shall be type-304 stainless steel with all-welded construction; exposed surfaces shall have #4 satin finish. Door shall be 18 gauge (1.2mm); have three 90° return edges and bottom edge hemmed; be secured to cabinet with a concealed, full-length stainless steel piano hinge; and equipped with two tumbler locks keyed like other Bobrick washroom accessories. Vendor product selection and coin return pushbutton-operation shall be certified ADA-ABA, ICC/ANSI A117.1 complaint by third party (certification available on request) for operation with one hand with less than 5 pounds of force (22.2 N) without tight grasping, pinching or twisting of the wrist. Push-Button coin return shall cancel selection and return coin into product tray. Wrong coins (penny, nickel, dime) shall by-pass mechanisms and drop into product tray. Product tray shall be impact-resistant PC-ABS plastic and provide easy access to dispensed product. Coin Box shall be equipped with a tumbler lock that is keyed differently than door locks. Unit shall not carry brand-name advertising.

**Surface-Mounted Napkin/Tampon Vendor shall be Model _____ (insert model number) of Bobrick Washroom Equipment, Inc., Clifton Park, New York; Jackson, Tennessee; Los Angeles, California; Bobrick Washroom Equipment Company, Scarborough Ontario; Bobrick Washroom Equipment Pty. Ltd., Australia; and Bobrick Washroom Equipment Limited, United Kingdom.**

The illustrations and descriptions herein are applicable to production as of the date of this Technical Data Sheet.
The manufacturer reserves the right to, and does from time to time, make changes and improvements in designs and dimensions.

2706-200 r6/30/15 Printed in U.S.A.
© 2015 by Bobrick Washroom Equipment, Inc.

TA-802

Revision Date:

BOBRICK

Technical Data

# LAVATORY-MOUNTED SOAP DISPENSER

# B-8226

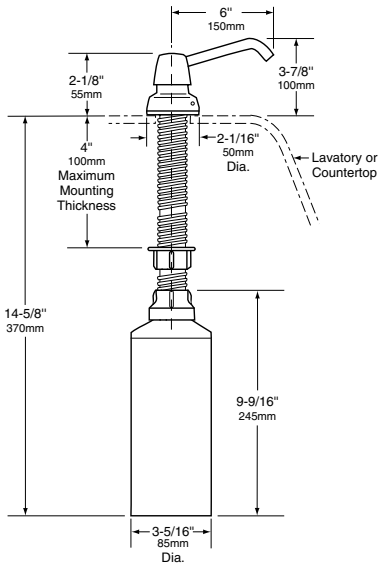


## MATERIALS:

**Piston, Spout, and Top Cover —** Type-304 stainless steel with bright polished finish.

**Cover Spacer —** Rigid, impact-resistant polyester.

**Escutcheon —** Chrome-plated, high-impact-resistant ABS with bright polished finish. Concealed locking mechanism.

**Body and Shank —** High-impact-resistant plastic.

**Valve —** ABS cylinder. Stainless steel spring. U-packing seal and duckbills.

**Container —** Translucent, shatter-resistant polyethylene. Capacity: 34-fl oz (1.0-L).

## OPERATION:

Press piston down to dispense commercially marketed all purpose hand soaps. Vandal-resistant spout can rotate 360° without damage to unit. Escutcheon locks to body with concealed locking mechanism that is opened with special key provided. To fill from top, unlock cover and remove piston, spout, and supply-tube assembly. Unit may also be filled by removing container from below lavatory.

*Designer's Note:* Bobrick liquid soap dispensers are designed to dispense commercially marketed all purpose hand soaps including liquid and lotion soaps and synthetic detergents.

## INSTALLATION:

Unit is designed for installation in 1" (25mm) diameter hole in porcelain-enameled steel, cast-iron or vitreous-china lavatories, as well as in countertops adjacent to lavatories. Unit may be mounted in unused faucet hole or through special hole requisitioned when lavatory is ordered from manufacturer (specify punching location). Shank accommodates maximum 4" (100mm) mounting thickness and can be cut in the field. Clearance required for container diameter is 3-3/8" (85mm).

## SPECIFICATION:

Lavatory-mounted soap dispenser shall dispense commercially marketed all purpose hand soaps, non-iodine based soaps and do not use alcohol based sensitizers. Piston and spout assembly shall be Type-304 stainless steel with bright polished finish. Spout shall rotate 360° without damage to valve mechanism. Escutcheon shall lock to body with concealed locking mechanism that is opened with special key provided. Piston, spout, and supply-tube assembly shall be removable from top for filling and maintenance. Valve shall be equipped with plastic cylinder, stainless steel spring, U-packing seal, and duckbills. Shank shall accommodate mounting thicknesses up to 4" (100mm). Translucent, shatter-resistant polyethylene container shall have a capacity of 34-fl oz (1.0-L).

**Lavatory-Mounted Soap Dispenser shall be Model B-8226 of Bobrick Washroom Equipment, Inc., Clifton Park, New York; Jackson, Tennessee; Los Angeles, California; Bobrick Washroom Equipment Company, Scarborough, Ontario; Bobrick Washroom Equipment Pty. Ltd., Australia; and Bobrick Washroom Equipment Limited, United Kingdom.**

The illustrations and descriptions herein are applicable to production as of the date of this Technical Data Sheet.
The manufacturer reserves the right to, and does from time to time, make changes and improvements in designs and dimensions.

Revised 12/22/16R/B, S/G Printed in U.S.A.
© 2016 by Bobrick Washroom Equipment, Inc.

TA-803

Revision Date:

BOBRICK

Technical Data

# RECESSED TOILET-SEAT-COVER DISPENSER

# B-301

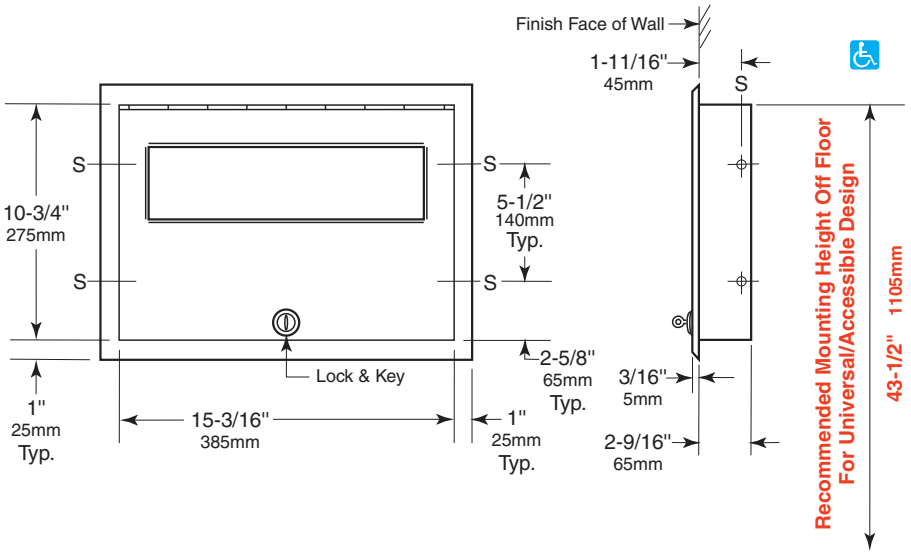


**Rough Wall Opening**
15-5/8" (395mm) wide
11-1/4" (285mm) high
2-5/8" (67mm) minimum
recessed depth

## MATERIALS:

**Cabinet —** 18-8, type-304, heavy-gauge stainless steel. All-welded construction.

**Flange —** 18-8, type-304, 22-gauge (0.8mm) stainless steel with satin finish. Drawn and beveled, one-piece, seamless construction.

**Door —** 18-8, type-304, 22-gauge (0.8mm) stainless steel with satin finish. Secured to cabinet with a full-length, stainless steel piano-hinge. Beveled opening. Equipped with a tumbler lock keyed like other Bobrick washroom accessories.

## OPERATION:

Dispenses single- or half-fold paper toilet seat covers. To fill dispenser, door unlocks with key provided. Capacity: 500 toilet seat covers.

## INSTALLATION:

Provide framed rough wall opening 15-5/8" wide x 11-1/4" high (395 x 285mm). Minimum recessed depth required from finish face of wall is 2-5/8" (67mm). Allow clearance for construction features that may protrude into rough wall opening from opposite wall. Coordinate with mechanical engineer to avoid pipes, vents, and conduits in wall. Mount cabinet with shims between framing and cabinet at all points indicated by an *S*, then secure unit with four #8 x 1-1/4" (4.2 x 32mm) sheet-metal screws (not furnished).

## SPECIFICATION:

Recessed toilet-seat-cover dispenser shall be type-304 stainless steel with all-welded construction; exposed surfaces shall have satin finish. Flange shall be drawn and beveled, one-piece, seamless construction. Door shall be secured to cabinet with a full-length, stainless steel piano-hinge and equipped with a tumbler lock keyed like other Bobrick washroom accessories. Dispenser shall have a capacity of 500 paper toilet seat covers.

**Recessed Toilet-Seat-Cover Dispenser shall be Model B-301 of Bobrick Washroom Equipment, Inc., Clifton Park, New York; Jackson, Tennessee; Los Angeles, California; Bobrick Washroom Equipment Company, Scarborough, Ontario; Bobrick Washroom Equipment Pty. Ltd., Australia; and Bobrick Washroom Equipment Limited, United Kingdom.**

The illustrations and descriptions herein are applicable to production as of the date of this Technical Data Sheet.
The manufacturer reserves the right to, and does from time to time, make changes and improvements in designs and dimensions.

Revised 10/15/14 Printed in U.S.A.
© 2014 by Bobrick Washroom Equipment, Inc.

TA-804

Revision Date:

BOBRICK

Technical Data

# RECESSED SANITARY NAPKIN DISPOSAL

# B-35303

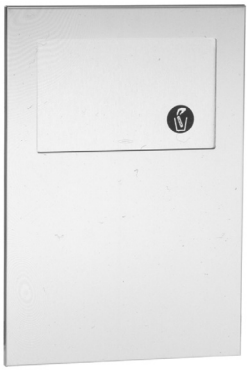

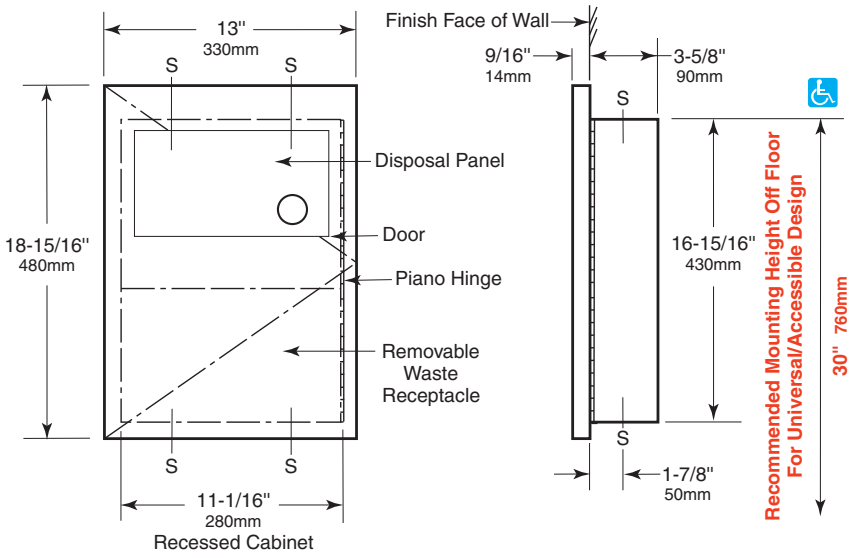


**Rough Wall Opening**
11-1/2" (290mm) wide
17-1/4" (440mm) high
3-3/4" (95mm) minimum recessed depth

## MATERIALS:

**Cabinet** — 18-8, type-304, stainless steel. All-welded construction.

**Door** — 18-8, type-304, 18-gauge (1.2mm) stainless steel with satin finish. 9/16" (14mm) 90° return for maximum rigidity. Secured to cabinet with a concealed, full-length stainless steel piano-hinge.

**Disposal Panel** — 18-8, type-304, 22-gauge (0.8mm) stainless steel with satin finish. Secured to door with a concealed, full-length stainless steel piano-hinge. Self-closing panel has international graphic symbol identifying napkin disposal.

**Waste Receptacle** — Leak-proof rigid molded polyethylene. Removable for servicing. Capacity: 1.2-gal. (4.6-L).

## OPERATION:

Unit is equipped with self-closing panel covering disposal opening. Napkin disposal is emptied by opening door and removing waste receptacle. Disposable paper liners for napkin receptacle are available as optional accessory: order Bobrick Part No. 353-12.

## INSTALLATION:

Provide framed rough wall opening 11-1/2" wide x 17-1/4" high (290 x 440mm). Minimum recessed depth required to finish face of wall is 3-3/4" (95mm). Allow for construction features that may protrude into rough wall opening from opposite wall. Coordinate with mechanical engineer to avoid pipes, vents, and conduits. If unit projects above top of wainscot, provide aluminum channel or other filler to eliminate gap between flange and finish face of wall. Mount unit in wall opening with shims between framing and cabinet at all points indicated by an *S*, then secure unit with #8 x 1-1/4" (4.2 x 32mm) sheet-metal screws (not furnished).

## SPECIFICATION:

Recessed sanitary napkin disposal shall be type-304 stainless steel with all-welded construction; exposed surfaces shall have satin finish. Door shall have 9/16" (14mm) 90° return and be equipped with a concealed, full-length stainless steel piano-hinge. Napkin disposal shall have self-closing stainless steel panel covering receptacle opening. Panel shall be equipped with full-length stainless steel piano-hinge and international graphic symbol identifying napkin disposal. Unit shall be furnished with a removable, leakproof, molded polyethylene receptacle. Receptacle shall have a capacity of 1.2-gal. (4.6-L).

**Recessed Sanitary Napkin Disposal shall be Model B-35303 of Bobrick Washroom Equipment, Inc., Clifton Park, New York; Jackson, Tennessee; Los Angeles, California; Bobrick Washroom Equipment Company, Scarborough, Ontario; Bobrick Washroom Equipment Pty. Ltd., Australia; and Bobrick Washroom Equipment Limited, United Kingdom.**

The illustrations and descriptions herein are applicable to production as of the date of this Technical Data Sheet.
The manufacturer reserves the right to, and does from time to time, make changes and improvements in designs and dimensions.

Revised 4/4/13 Printed in U.S.A.
© 2013 by Bobrick Washroom Equipment, Inc.

TA-801

Revision Date:

BOBRICK

Technical Data

# ConturaSeries® SURFACE-MOUNTED SOAP DISPENSER

# B-4112

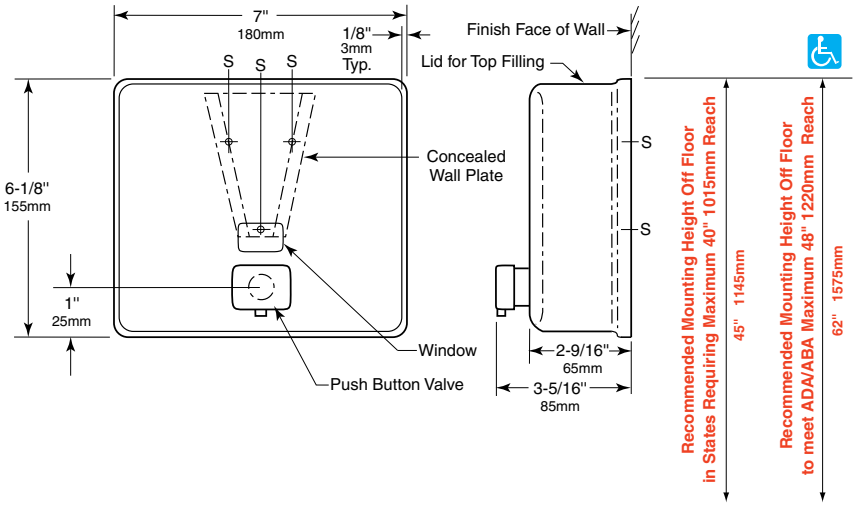


## MATERIALS:

**Container —** Body is 18-8, Type-304, 20-gauge (1.0mm) stainless steel with satin-finish. Drawn, one-piece, seamless construction. Front has same degree of arc as other Bobrick ConturaSeries washroom accessories. Radius on corners and edges complement other ConturaSeries accessories. Back plate is 22-gauge (0.8mm) stainless steel with 20-gauge (1.0mm) stainless steel mounting bracket attached. Container body and back plate are epoxy-sealed to prevent warping and leakage. Concealed wall plate is 20-gauge (1.0mm) stainless steel. Equipped with a plastic soap refill-indicator window and a locked, hinged stainless steel lid for top filling. Capacity: 40-fl oz (1.2-L).

**Valve —** Black molded plastic push button. Soap head-holding mushroom valve. Stainless steel spring. U-packing seal and duckbill. Antibacterial-soap-resistant plastic cylinder.

## OPERATION:

Corrosion-resistant valve dispenses commercially marketed all-purpose hand soaps. To prevent corrosion, use only chloride-free pH-netural liquid soaps, non-iodine based soaps and do not use alcohol based sensitizers. Valve operates with one hand, without tight grasping, pinching, or twisting of the wrist, and with less than 5 pounds of force (22.2 N) to comply with accessible design guidelines (including ADAAG in U.S.A.). Window indicates when refill is required. The locked, hinged lid opens for top filling with special key provided. Concealed, vandal-resistant mounting.

## INSTALLATION:

Secure wall plate to the wall with screws furnished at points indicated by an *S*. Slide mounting bracket of container down onto wall plate and secure unit with furnished locking-screw. For plaster or dry wall construction, provide concealed backing to comply with local building codes, then secure unit with screws furnished. For other wall surfaces, provide fiber plugs or expansion shields for use with screws furnished, or provide 1/8" (3mm) toggle bolts or expansion bolts.

**Note:** Surface-mount the dispenser plumb and true with valve 6" (152mm) to right or left of lavatory center. Provide 4" (102mm) minimum clearance from the lid to the underside of any horizontal projection. Push buttons should be located 44" (1120mm) maximum above the finish floor. Where a high reach is over an obstruction (countertop), the high forward reach shall be 48" (1220mm) maximum where the reach depth is 20" (510mm) maximum. Where the reach depth exceeds 20" (510mm) the high forward reach shall be 44" (1120mm) maximum and the reach depth shall be 25" (635mm) maximum.

## SPECIFICATION:

Surface-mounted soap dispenser shall be Type-304 stainless steel with satin-finish. Corrosion-resistant valve shall dispense commercially marketed all-purpose hand soaps. To prevent corrosion, use only chloride-free pH-netural liquid soaps. Valve shall be operable with one hand and with less than 5 pounds of force (22.2 N) to comply with accessible design guidelines (including ADAAG in U.S.A.). Front of soap dispenser shall have same degree of arc and match other Bobrick ConturaSeries accessories in the washroom. Radius on corners and edges of soap dispenser shall complement other Bobrick ConturaSeries washroom accessories. Container body and back plate shall be epoxy-sealed to prevent warping and leakage. Soap dispenser shall have concealed, vandal-resistant mounting. Locked, hinged stainless steel lid for top filling shall require special key to open. Capacity shall be 40-fl oz (1.2-L).

**Surface-Mounted Stainless Steel Soap Dispenser shall be Model B-4112 of Bobrick Washroom Equipment, Inc., Clifton Park, New York; Jackson, Tennessee; Los Angeles, California; Bobrick Washroom Equipment Company, Scarborough, Ontario; Bobrick Washroom Equipment Pty. Ltd., Australia; and Bobrick Washroom Equipment Limited, United Kingdom.**

The illustrations and descriptions herein are applicable to production as of the date of this Technical Data Sheet.
The manufacturer reserves the right to, and does from time to time, make changes and improvements in designs and dimensions.

Revised 12/22/16 Printed in U.S.A.
© 2016 by Bobrick Washroom Equipment, Inc.

TA-807

Revision Date:

BOBRICK

Technical Data

# SURFACE-MOUNTED SANITARY NAPKIN DISPOSAL

# B-254

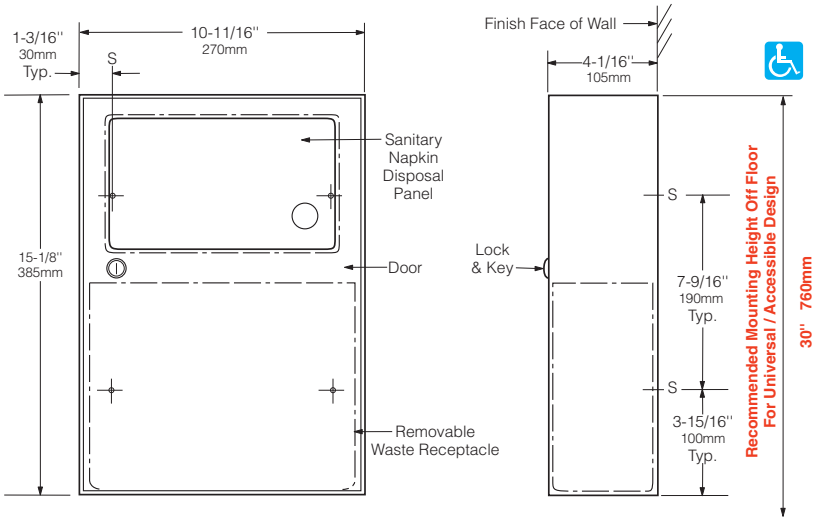


## MATERIALS:

**Cabinet —** 18-8, type-304, heavy-gauge stainless steel. All-welded construction. Exposed surfaces have satin finish.

**Door —** 18-8, type-304, 22-gauge (0.8mm) stainless steel with satin finish. Secured to cabinet with a full-length stainless steel piano-hinge. Equipped with a tumbler lock keyed like other Bobrick washroom accessories.

**Disposal Panels (2) —** 18-8, type-304, 22-gauge (0.8mm) stainless steel with satin finish. Bottom edges hemmed for safety. Secured to door and permanent panel with spring-loaded, full-length stainless steel piano-hinge. Equipped with international graphic symbol identifying sanitary napkin disposal.

**Waste Receptacle —** Leak-proof, rigid molded polyethylene. Removable for servicing. Capacity: 1.2-gal. (4.6-L).

## OPERATION:

Unit is equipped with a self-closing panel covering each disposal opening. Napkin disposal is emptied by opening door with furnished key and removing waste receptacle.

## INSTALLATION:

For partitions with particle-board or other solid core, secure with four #8 x 1-1/4" (4.2 x 32mm) sheet=metal screws (not furnished), or provide through-bolts, nuts, and washers.

For hollow-core metal partitions, provide solid backing into which sheet-metal screws can be secured. If two units are installed back-to-back, then provide threaded sleeves and machine screws for the full thickness of partition.

For plaster or dry wall construction, provide concealed backing to comply with local building coeds, then secure unit with #8 x 1-1/4" (4.2 x 32mm) sheet-metal screws.

For other wall surfaces, provide fiber plugs or expansion shields for use with #8 x 1-1/4" (4.2 x 32mm) sheet-metal screws, or provide 3/16" (5mm) toggle bolts or expansion bolts.

## SPECIFICATION:

Surface-mounted sanitary napkin disposal shall be type-304 stainless steel with all-welded construction; exposed surfaces shall have satin finish. Door shall be secured to cabinet with a full-length stainless steel piano-hinge and equipped with a tumbler lock keyed like other Bobrick washroom accessories. Unit shall have a self-closing panel covering each disposal opening. Panel shall have bottom edge hemmed for safety, be secured to door with spring-loaded, full-length stainless steel piano-hinge, and equipped with international graphic symbols identifying sanitary napkin disposal. Unit shall be furnished with a removable, leak-proof molded polyethylene receptacle. Receptacle shall have a capacity of 1.2-gal. (4.6-L).

**Surface-Mounted Sanitary Napkin Disposal shall be Model B-254 of Bobrick Washroom Equipment, Inc., Clifton Park, New York; Jackson, Tennessee; Los Angeles, California; Bobrick Washroom Equipment Company, Scarborough, Ontario; Bobrick Washroom Equipment Pty. Ltd., Australia; and Bobrick Washroom Equipment Limited, United Kingdom.**

The illustrations and descriptions herein are applicable to production as of the date of this Technical Data Sheet.
The manufacturer reserves the right to, and does from time to time, make changes and improvements in designs and dimensions.

Revised 8/6/14 Printed in U.S.A.
© 2014 by Bobrick Washroom Equipment, Inc.

TA-808

Revision Date:

BOBRICK

Technical Data

# InstaDry™ SURFACE-MOUNTED AUTOMATIC HAND DRYER

# B-7125

**Universal Voltage:**

- 110V–240V, 0.8–1.9 AMP, 50/60 Hz, 202–213 Watts, cULus Listed and CE marked.

***RECOMMENDED MOUNTING HEIGHTS**

| | | |
|---|---|---|
| Children's Washrooms, ages 3-4 | 36" | (915mm) |
| Children's Washrooms, ages 5-8 | 40" | (1015mm) |
| Children's Washrooms, ages 9-12 | 44" | (1120mm) |
| Universal Design | 40" - 48" | (1015 x 1219mm) |

*Bottom screw hole of mounting base to face floor

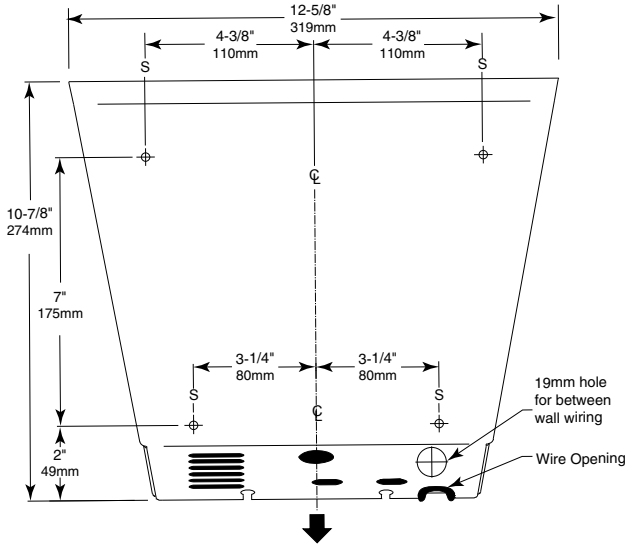


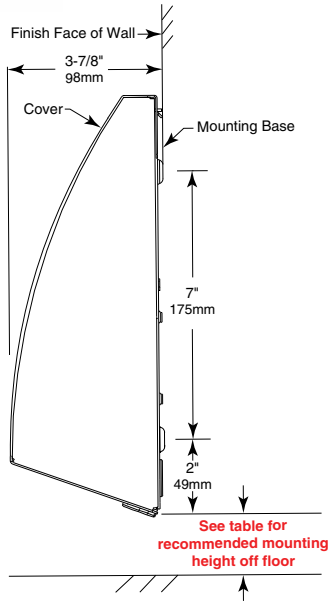


**MATERIALS:**

**Cover —** 18-8, Type-304 stainless steel 1.2mm thick with #4 satin-finish vertical grain. Air-inlet is vandal-resistant. Cover projects no more than 4" (100mm) from wall and is secured to mounting base with two recessed socket button head cap screws.

**Mounting Base —** 1.5mm SECC punched and formed.

**Motor —** Brushless 24Vdc with built in thermal protection. Ball bearings. Operates at 40,000 RPM.

**Blower —** Backward curved radial bladed impeller in polycarbonate housing.

**Electronic Control —** Infrared sensor automatically turns dryer on when hands are held under air-outlet opening and across path of sensor. Remove hands from path of sensor and dryer stops. Electronic sensor has automatic shutoff approximately 85 seconds after dryer turns on if an inanimate object is placed across air-outlet opening. After inanimate object is removed, electronic sensor automatically resets itself and dryer operates normally.

continued . . .

The illustrations and descriptions herein are applicable to production as of the date of this Technical Data Sheet.
The manufacturer reserves the right to, and does from time to time, make changes and improvements in designs and dimensions.

Issued 10/26/17 Printed in U.S.A.
© 2017 by Bobrick Washroom Equipment, Inc.

**OPERATION:**

Infrared sensor automatically turns dryer on when hands are held under air-outlet opening and across path of sensor. Remove hands from path of sensor and dryer stops. Electronic sensor has automatic shutoff approximately 85 seconds after dryer turns on if an inanimate object is placed across air-outlet opening. After inanimate object is removed, electronic sensor automatically resets itself and dryer operates normally.

**5-Year Limited Warranty —** In addition to Bobrick's one-year guarantee, Bobrick extends a limited 5-year warranty from the date of purchase on all parts for model B-7125. This warranty is limited to the repair or exchange of defective parts at the option of Bobrick and is only extended to the original owner of the installed unit against defects in factory workmanship or material under normal use and service.

**INSTALLATION:**

**Wall preparation —** Locate mounting base on wall using template provided. For brick, stone, and concrete walls drill four 0.315" (8mm) holes to suit provided wall plugs 0.315" x 1-1/4" (8 x 45mm) and screws # 10 x 2" (4.8 x 50mm) long. See template for wall plug and screw installation details. For plaster or dry wall construction, provide concealed backing to comply with local building codes and secure with four #10 (4.8) round-head sheet-metal screws or 3/16" (5mm) toggle bolts (not furnished). Provide electrical service from nearest distribution panel to dryer mounting base in conformance with local electrical codes.

**Dryer Wiring Instructions:**

**1. For 115-Volt Dryers —** Connect ground wire to ground terminal marked ⏚, the black or hot wire to terminal marked L1, and neutral or white wire to terminal marked N.

**2. For 208–240-Volt Dryers —** Connect ground wire to ground terminal marked ⏚ and the 208- or 240-volt wires to terminal marked L1 and L2.

**3.** This is a class 1 product and requires grounding.

***Notes:*** Electronic sensor in Automatic dryers will pick up movement within 6" (150mm) of the air-outlet opening. Use caution when choosing location for Automatic dryers in confined areas. Consider proximity to doorways and other traffic areas. Bobrick automatic hand dryers should be installed at least 19-3/4" (500mm) above any projection or horizontal surface which may interfere with the operation of the automatic sensor.

**Replacement Parts:**

| | |
|---|---|
| Cover | 7125-150 |
| Controller | 7125-25 |
| Controller Loom (Wiring) | 7125-30 |

**SAFETY WARNING:**

**Installation and wiring must conform to current local regulations and building codes. Unit must be installed by a qualified electrician. Turn off electrical power supply before making electrical connections. If the unit fails or malfunctions, it should be disconnected from the power supply and a qualified electrician should be called. To avoid potential injury, the building owner or maintenance personnel should remove the unit from service if the grille is missing or damaged.**

**SPECIFICATION:**

Surface-mounted high-speed hand dryer shall have an energy consumption of only 200 watts. Unit shall have 18-gauge (1.2mm) thick Type-304 stainless steel cover with #4 satin finish vertical grain. The slim profile cover shall project no more than 3 7/8" (98mm) from the finished face of wall to comply with accessible design guidelines (including ADAAG in the U.S.A.) and have a dry time of less than 12 seconds. Dryer shall be universal, to accommodate voltages between 110-240V. Dryer shall be secured to concealed mounting bracket with vandal-resistant screws. Electronic sensor automatically turns dryer on when hands are held under air-outlet opening and across path of sensor. Dryer turns off automatically when hands are removed. Sensor automatically shuts dryer off approximately 85 seconds after dryer turns on if an inanimate object is placed across air-outlet opening. After object is removed, electronic sensor automatically resets itself and dryer operates normally. Unit is cULus listed and is CE marked. Dryer has a limited 5-year warranty on all parts.

**InstaDry Surface-Mounted Automatic Hand Dryer shall be Model B-7125 of Bobrick Washroom Equipment, Inc., Clifton Park, New York; Jackson, Tennessee; Los Angeles, California; Bobrick Washroom Equipment Company, Scarborough, Ontario; Bobrick Washroom Equipment Pty. Ltd., Australia; and Bobrick Washroom Equipment Limited, United Kingdom.**

The illustrations and descriptions herein are applicable to production as of the date of this Technical Data Sheet.
The manufacturer reserves the right to, and does from time to time, make changes and improvements in designs and dimensions.


© 2017 by Bobrick Washroom Equipment, Inc.

BOBRICK

Technical Data

# ConturaSeries® RECESSED PAPER TOWEL DISPENSER AND WASTE RECEPTACLE

# B-43944

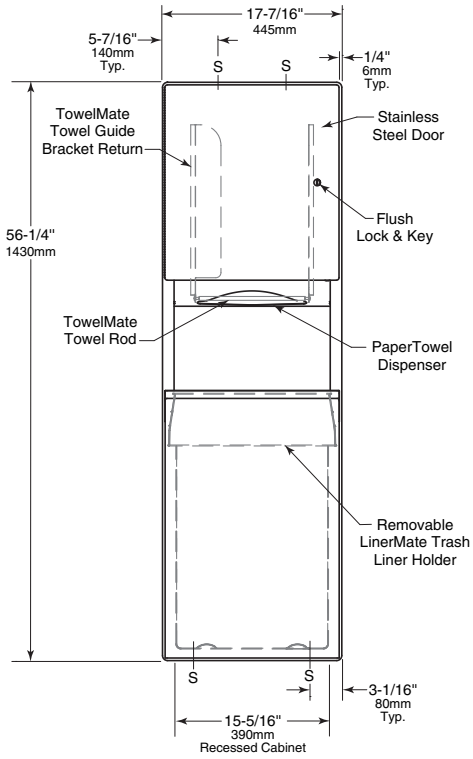


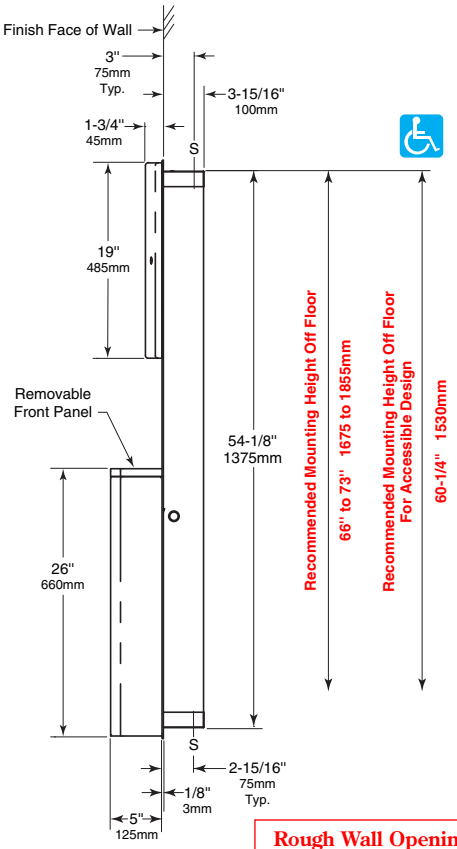


**Rough Wall Opening**
16" (405mm) wide
54-3/4" (1390mm) high
4" (100mm) minimum
recessed depth

## MATERIALS:

**Cabinet** — 18-8, type-304, 22-gauge (0.8mm) stainless steel. All-welded construction. Exposed surfaces have satin-finish.

**Flange** — 18-8, type-304, 22-gauge (0.8mm) stainless steel with satin-finish. Drawn, one-piece, seamless construction. Radius on corners and return edges complement corners and edges of door and waste receptacle.

**Door** — 18-8, type-304, 18-gauge (1.2mm) stainless steel with satin-finish. Drawn, one-piece, seamless construction. Front of door has same degree of arc as front of waste receptacle and other Bobrick ConturaSeries washroom accessories. Radius on corners and edges of door match side edges of waste receptacle and other ConturaSeries accessories. Secured to cabinet with a full-length stainless steel piano-hinge. Equipped with a stainless steel cable door-swing limiter and flush tumbler lock keyed like other Bobrick washroom accessories.

**Paper Towel Dispenser** — 18-8, type-304, 22-gauge (0.8mm) stainless steel with satin-finish. Cabinet inside equipped with 90° return towel guide angle to prevent paper towels from falling forward out when door is opened for servicing. Rounded towel tray has hemmed opening to dispense paper towels without tearing. Unit equipped with TowelMate consisting of a 90° return towel guide angle inside cabinet to prevent paper towels from falling forward out when door is opened for servicing and a Nylon Rod across the center of the towel tray to dispense paper towels one at a time. Waste receptacle shall have a formed, 18-gauge (1.2mm), one-piece, seamless, removable front panel with top edge hemmed. Capacity: 600 C-fold or 800 multifold paper towels.

**TowelMate® Towel Rod Assembly** — Consisting of a round Nylon Rod and (2) stainless steel Rod Screws for attachment, is field replaceable. Stainless steel Stop Screws (2) lock TowelMate Towel Rod assembly in place.

To retrofit TowelMate into existing installed units manufactured prior to April 2010, order TowelMate Accessory Bobrick Part No. 3944-130

continued . . .

The illustrations and descriptions herein are applicable to production as of the date of this Technical Data Sheet.
The manufacturer reserves the right to, and does from time to time, make changes and improvements in designs and dimensions.

Revised 80111 Printed in U.S.A.
© 2011 by Bobrick Washroom Equipment, Inc.

**Waste Receptacle —** 18-8 S, type-304, 18-gauge (1.2mm) stainless steel with satin-finish. Formed, one-piece, seamless construction. Removable front panel has same degree of arc as front of paper towel dispenser door and other Bobrick ConturaSeries washroom accessories. Top edge hemmed for safe handling. Radius on side edges of waste receptacle match corners and edges of door and other ConturaSeries accessories. Secured to cabinet with two keyholes over studs on bottom and two tamper-resistant setscrews on top. Capacity: 15.0-gal. (56.8-L).

**LinerMate® Trash Liner Holder —** Unit equipped with LinerMate trash liner holder fabricated with molded plastic trash liner holder sleeve and a 20-gauge (0.91mm), U-shaped support strap; riveted construction. Liner holder shall have an arc at front and same shape as inside of waste receptacle area. LinerMate facilitates installation and removal of disposable trash liners and retains liner inside waste receptacle.

To retrofit LinerMate into existing installed units manufactured prior to December 2009, order LinerMate Accessory Bobrick Part No. 43944-134

## OPERATION:

Paper towel dispenser will dispense C-fold or multifold paper towels without adjustment or use of adapters. Cable door-swing limiter prevents damage to washroom accessories and walls. Load paper towels in towel tray, and then pull one sheet of paper towel over the TowelMate towel rod and out to conceal rod and start dispense. Front of waste receptacle panel is removable for cleaning cabinet interior. To insert disposable trash liner, lift LinerMate trash liner holder up and forward and rest over edge of waste receptacle front panel with the bottom notches of LinerMate engaged on top front edge of receptacle. Place disposable trash liner inside LinerMate and fold disposable trash liner over molded sleeve. Tie a knot in the corner of the disposable trash liner, then place LinerMate with disposable trash liner back into receptacle. To empty, gather disposable trash liner from LinerMate liner holder sleeve and lift disposable trash liner up.

## INSTALLATION:

Provide framed rough wall opening 16" wide x 54-3/4" high (405 x 1390mm). Minimum recessed depth required to finish face of wall is 4" (100mm). Allow clearance for construction features that may protrude into rough wall opening from opposite wall. Coordinate with mechanical engineer to avoid pipes, vents, and conduits. If unit projects above top of wainscot, provide aluminum channel or other filler to eliminate gap between flange and finish face of wall. Mount unit in wall opening with shims between framing and cabinet at all points indicated by an *S*, then secure unit with #8 x 1-1/4" (4.2 x 32mm) screws (not furnished).

## SPECIFICATION:

Recessed paper towel dispenser and waste receptacle shall be type-304 stainless steel with all-welded construction; exposed surfaces shall have satin-finish. Front of paper towel dispenser door and waste receptacle shall have same degree of arc and match other Bobrick ConturaSeries accessories in the washroom. Radius on corners and edges of flange, door, and waste receptacle shall complement other Bobrick ConturaSeries washroom accessories. Flange shall be drawn, one-piece, seamless construction. Paper towel dispenser door shall be drawn, 18-gauge (1.2mm), one-piece, seamless construction; secured to cabinet with a full-length stainless steel piano-hinge; and equipped with a stainless steel cable door-swing limiter and flush tumbler lock keyed like other Bobrick washroom accessories. Paper towel dispenser shall dispense 600 C-fold or 800 multifold paper towels. Unit equipped with TowelMate consisting of a 90° return towel guide angle inside cabinet to prevent paper towels from falling forward out when door is opened for servicing and a Nylon Rod across the center of the towel tray to dispense paper towels one at a time. Waste receptacle shall have a formed, 18-gauge (1.2mm), one-piece, seamless, removable front panel with top edge hemmed. Unit equipped with LinerMate trash liner holder fabricated with molded plastic trash liner holder sleeve and a 20-gauge (0.91mm), U-shaped support strap; riveted construction. Liner holder shall have an arc at front and same shape as inside of waste receptacle area. LinerMate facilitates installation and removal of disposable trash liners and retains liner inside waste receptacle. Capacity of waste receptacle shall be 15.0-gal. (56.8-L).

**Recessed Paper Towel Dispenser And Waste Receptacle shall be Model B-43944 of Bobrick Washroom Equipment, Inc., Clifton Park, New York; Jackson, Tennessee; Los Angeles, California; Bobrick Washroom Equipment Company, Scarborough, Ontario; Bobrick Washroom Equipment Pty. Ltd., Australia; and Bobrick Washroom Equipment Limited, United Kingdom.**

The illustrations and descriptions herein are applicable to production as of the date of this Technical Data Sheet.
The manufacturer reserves the right to, and does from time to time, make changes and improvements in designs and dimensions.


© 2011 by Bobrick Washroom Equipment, Inc.

TA-810

Revision Date:

BOBRICK

Technical Data

# TILT MIRROR WITH STAINLESS STEEL FRAME

# B-293 SERIES

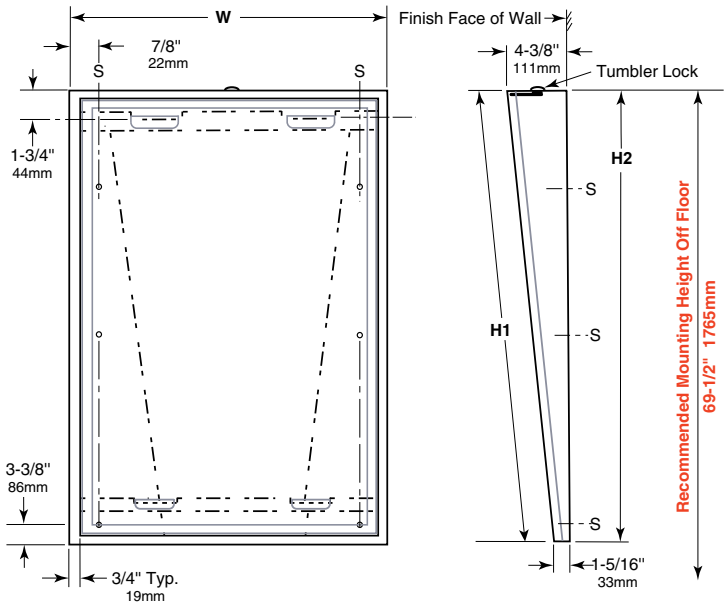


**STANDARD STOCK SIZES**

| MODEL NO. | MIRROR SIZE | | OVERALL SIZE | |
|---|---|---|---|---|
| | W | H1 | W | H2 |
| **B-293 1830** | 18" (46cm) | 30" (76cm) | 18" (46cm) | 30-3/16" (77cm) |
| **B-293 1836** | 18" (46cm) | 36" (91cm) | 18" (46cm) | 36-3/16" (92cm) |
| **B-293 2436** | 24" (61cm) | 36" (91cm) | 24" (61cm) | 36-3/16" (92cm) |

*Other sizes up to 40" x 40" (101 x 122cm) or 48" x 36" (122 x 91cm) are available on special order; minimum size available, 16" x 24" (41 x 61cm).*
*Design not as shown*

## MATERIALS:

**Mirror Frame —** 18-8, type 304, heavy-gauge stainless steel, 3/4" x 3/4" (19 x 19mm) angle with vertical-grain satin finish. One piece, roll-formed construction forms continuous integral stiffener on all sides. Bevel design on front of angle holds frame tightly against mirror. Corners of mirror frame are heliarc welded, ground and polish smooth. Galvanized steel back is fastened to frame with concealed screws and equipped with integral horizontal hanging brackets near the top and bottom of the mirror for hanging the mirror and to prevent the mirror from pulling away from the wall frame.

**Wall Frame —** 18-8, type 304, heavy-gauge stainless steel with satin finish. Tapers from 4-3/8" (111mm) depth at top to 1-5/16" (33mm) depth at bottom. Wall Frame furnished with tumbler lock to secure mirror to wall frame.
*Designer's Note:* Type 304 stainless steel provides superior corrosion resistance, compared to 400 Series stainless steel, against environmental moisture, hose-down maintenance and strong cleaning solutions.

**Mirror —** No. 1 quality, 1/4" (6mm) select float glass, selected for silvering; electrolytically copper-plated by the galvanic process, guaranteed for 15 years against silver spoilage. All edges are polished and protected by plastic filler strips; back is protected by full-size, shock-absorbing, water-resistant, nonabrasive, 1/8" (3mm) thick polystyrene padding.

## OPERATION:

Mirror is designed to provide full visibility for wheelchair patients in hospitals and nursing homes.

## INSTALLATION:

For complete installation instructions please follow 293-69 installation instruction sheet.

## SPECIFICATION:

Tilt mirror assembly shall consist of a mirror and a separate wall frame with built-in wall hanger. Wall frame furnished with tumbler lock for securing mirror to wall frame. Tilt mirror frame shall be type 304 stainless steel with beveled front to hold frame tightly against mirror; corners shall be welded, ground, and polished smooth. Wall frame shall be type 304 stainless steel designed with horizontal locking bars to secure mirror to wall frame. All exposed surfaces shall have satin finish with vertical grain. Select float glass mirror shall be guaranteed for 15 years against silver spoilage. All edges shall be protected by plastic filler strips. Back shall be protected by full-size, shock-absorbing, water-resistant, nonabrasive, 1/8" (3mm) thick polystyrene padding.

**Tilt Mirror shall be Model B-293 _____ (insert width and height) of Bobrick Washroom Equipment, Inc., Clifton Park, New York; Jackson, Tennessee; Los Angeles, California; Bobrick Washroom Equipment Company, Scarborough, Ontario; Bobrick Washroom Equipment Pty. Ltd., Australia; and Bobrick Washroom Equipment Limited, United Kingdom.**

The illustrations and descriptions herein are applicable to production as of the date of this Technical Data Sheet.
The manufacturer reserves the right to, and does from time to time, make changes and improvements in designs and dimensions.

Revised 11/16/16 Printed in U.S.A.
© 2016 by Bobrick Washroom Equipment, Inc.

TA-811

Revision Date:

BOBRICK

Technical Data

# RECESSED TOILET-SEAT-COVER DISPENSER

# B-3013

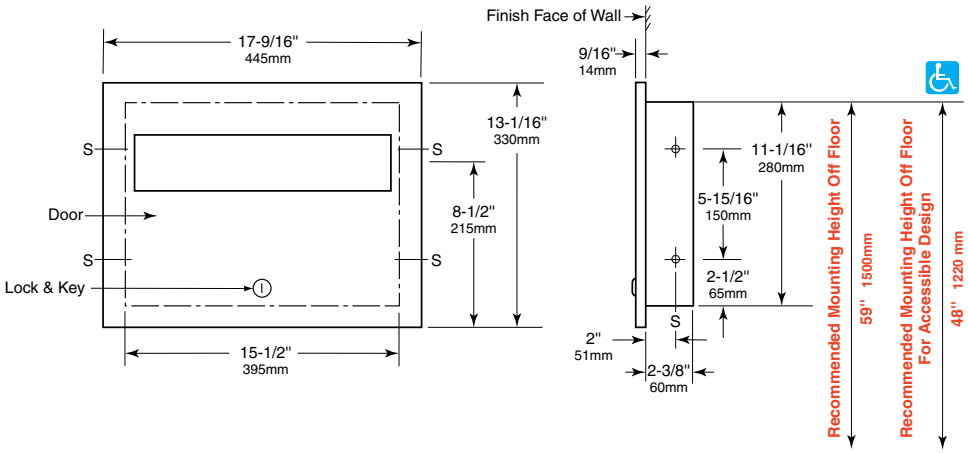


**Rough Wall Opening**
15-7/8" (405mm) wide
11-7/16" (290mm) high
2-3/4" (70mm) minimum recessed depth

## MATERIALS:

**Cabinet —** 18-8, Type-304, heavy-gauge stainless steel. All-welded construction.

**Door —** 18-8, Type-304, 18-gauge (1.2mm) stainless steel with satin finish. 9/16" (14mm) 90° return for maximum rigidity. Secured to cabinet with a concealed, full-length stainless steel piano-hinge. Equipped with a tumbler lock keyed like other Bobrick washroom accessories.

## OPERATION:

Dispenses single- or half-fold paper toilet seat covers. To fill dispenser, door unlocks with key provided. Capacity: 500 toilet seat covers.

## INSTALLATION:

Provide framed rough wall opening 15-7/8" wide x 11-7/16" high (405 x 290mm). Minimum recessed depth required from finish face of wall is 2-3/4" (70mm). Allow clearance for construction features that may protrude into rough wall opening from opposite wall. Coordinate with mechanical engineer to avoid pipes, vents, and conduits in wall. Mount cabinet with shims between framing and cabinet at all points indicated by an *S,* then secure unit with four #8 x 1-1/4" (4.2 x 32mm) sheet-metal screws (not furnished).

## SPECIFICATION:

Recessed toilet-seat-cover dispenser shall be Type-304 stainless steel with all-welded construction; exposed surfaces shall have satin finish. Door shall be 18 gauge (1.2mm); have 9/16" (14mm) 90° return edges; be secured to cabinet with a concealed, full-length stainless steel piano-hinge; and equipped with a tumbler lock keyed like other Bobrick washroom accessories. Dispenser shall have a minimum capacity of 500 paper toilet seat covers.

**Recessed Toilet-Seat-Cover Dispenser shall be Model B-3013 of Bobrick Washroom Equipment, Inc., Clifton Park, New York; Jackson, Tennessee; Los Angeles, California; Bobrick Washroom Equipment Company, Scarborough, Ontario; Bobrick Washroom Equipment Pty. Ltd., Australia; and Bobrick Washroom Equipment Limited, United Kingdom.**

The illustrations and descriptions herein are applicable to production as of the date of this Technical Data Sheet.
The manufacturer reserves the right to, and does from time to time, make changes and improvements in designs and dimensions.

Revised 4/10/18 Printed in U.S.A.
© 2018 by Bobrick Washroom Equipment, Inc.

TA-901

Revision Date:

# KOALA KARE PRODUCTS
# KB110-SSRE HORIZONTAL RECESSED MOUNTED STAINLESS STEEL FINISH BABY CHANGING STATION

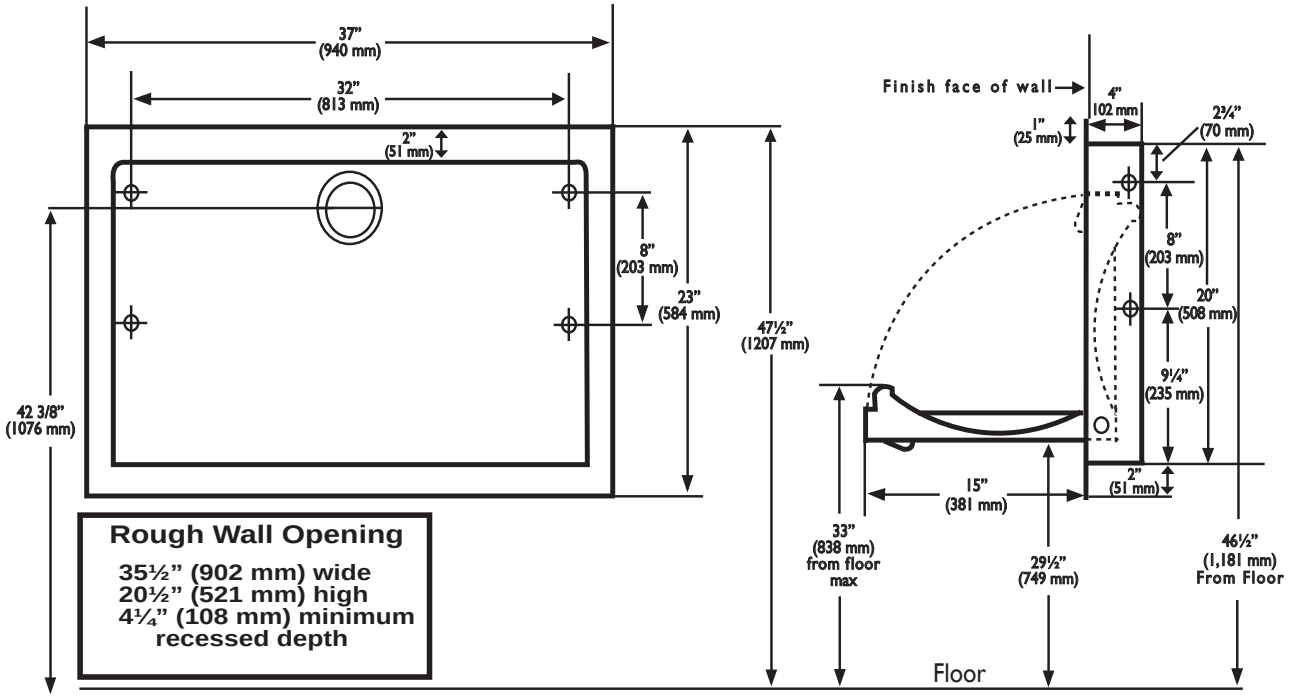


**Rough Wall Opening**

35½" (902 mm) wide
20½" (521 mm) high
4¼" (108 mm) minimum recessed depth

Koala Kare

We Care for Kids.

## KB110-SSRE TECHNICAL DATA SHEET

## MATERIALS:

18 gauge, type 304 satin stainless steel exterior finish with FDA approved blow molded high-density grey polyethylene with Microban® antimicrobial interior. Reinforced full-length steel-on-steel hinge mechanism, with 11-gauge steel mounting plates and mounting hardware included. Molded in graphics and safety messages in six languages. Contoured changing surface area is 442 sq. in (2851 sq. cm) and comes complete with nylon safety straps and bag hooks.

## OPERATION:

Concealed pneumatic cylinder and hinge structure provides controlled, slow opening and closing of bed. High-density polyethylene is easy to clean and resists odors and bacterial growth. Complies with ASTM static load performance requirements when properly installed. Built-in liner dispenser holds approximately 25 KB150-99 sanitary liners.

Warning: To ensure that the unit supports the intended loads, baby changing stations must be properly installed according to the manufacturer's instructions.

## SPECIFICATION:

Baby changing station body shall have 18 gauge, type 304 satin stainless steel exterior finish with high-density grey polyethylene interior. Design of unit shall be recess-mounted. Unit shall be equipped with a pneumatic cylinder for controlled opening and closing of bed. Bed shall be secured to back plate with a concealed, full-length steel-on-steel hinge. Unit shall have Microban® antimicrobial embedded into plastic material. No hinge structure shall be exposed on interior or exterior surfaces. Unit shall have 11-gauge steel mounting plates with mounting hardware included. Unit shall conform to ASTM F 2285-04 Standard Consumer Safety Performance Specification for Diaper Changing Tables for Commercial Use, ANSI Z535.4 Product Safety Signs and Labels, and ASTM G21 Antifungal Standards or local code if more stringent installation requirements are applicable for barrier-free accessibility. Bed shall have smooth concave changing area with a nylon safety strap and two hooks for bags or purses. Unit shall have a built-in Liner Dispenser for use with 3-ply chemical free biodegradable sanitary liners, universal instruction graphics and safety messages in 6 languages. Unit shall be backed by manufacturer's 5-year limited warranty on materials and workmanship and include a provision for replacement caused by vandalism. Unit shall be manufactured in the U.S.A.

**INSTALLATION:**

To ensure proper installation and compliance to building codes, it is recommended that a qualified person or carpenter perform the installation of the unit. The unit must be properly installed onto a permanent wall that is capable of supporting significant weight, and can accommodate the supplied installation hardware.

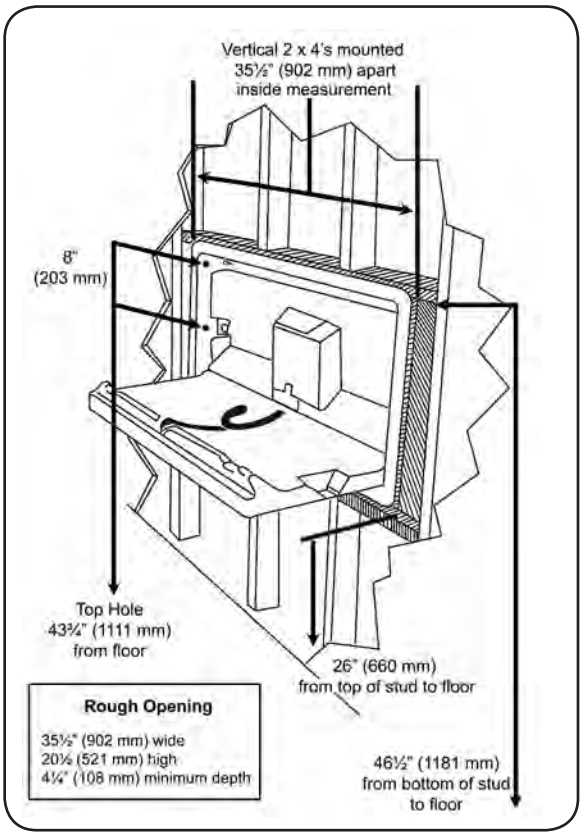


1. Remove changing station from the shipping container and check for any freight damage. Identify the best location for installing the unit. Hold the unit in place and open the bed. Make sure you have taken the operating clearance into consideration.

2. Select the wall area where the unit will be installed. Measure from the floor 46½" (1118 mm) on stud center and mark the wall. Hold the unit in place to verify the alignment. Mark rough opening 35½" W x 20½" H (902 mm x 521 mm) and cut a hole in the wall with a minimum depth of 4¼" (108 mm) as measured from the finished surface of the wall (ie: tile, drywall, etc). Construct mounting frame as indicated in the illustration. If the wall surface is masonry or tile over wood studs, use caution when cutting rough opening.

3. The unit will be mounted using four ¼" x 3" wood screws through side holes as shown in illustration.

4. Place the unit into the recessed area and insert the screws and flat washers to hold the unit in place. It may be necessary to adjust the level of unit by using a shim on the top right or left side of the unit before tightening securely to the studs.

*The illustrations and descriptions herein are applicable to production as of the date of this Technical Data Sheet. The manufacturer reserves the right to, and does from time to time, make changes and improvements in designs and dimensions without notice.*